(12) INTERNATIONAL APPLICATION PUBLISHED UNDER THE PATENT COOPERATION TREATY (PCT)

(19) World Intellectual Property Organization
International Bureau

(43) International Publication Date
26 June 2008 (26.06.2008)

PCT

(10) International Publication Number
WO 2008/074632 A1

(51) International Patent Classification:
B01J 8/18 (2006.01) *C08F 10/00* (2006.01)
B01J 8/24 (2006.01)

(21) International Application Number:
PCT/EP2007/063277

(22) International Filing Date:
4 December 2007 (04.12.2007)

(25) Filing Language: English

(26) Publication Language: English

(30) Priority Data:
06126686.2 20 December 2006 (20.12.2006) EP

(71) Applicant *(for all designated States except US)*: **Basell Poliolefine Italia s.r.l.** [IT/IT]; Intellectual Property, Via Pergolesi, 25, I-20124 Milano (IT).

(72) Inventors: **RINALDI, Roberto**; Via Tito Speri, 11, I-46100 Mantova (IT). **PENZO, Giuseppe**; Via Segantini, 16, I-46047 Montanara Di Curtatone, Mantova (IT). **GOVONI, Gabriele**; Via Pilastro, 63, I-44045 Renazzo (FE) (IT). **MICHIELIN, Luciano** (deceased).

(74) Agent: **SACCO, Marco**; Basell Poliolefine Italia s.r.l., Intellectual property, P.le Donegani 12, I-44100 Ferrara (IT).

(81) Designated States *(unless otherwise indicated, for every kind of national protection available)*: AE, AG, AL, AM, AT, AU, AZ, BA, BB, BG, BH, BR, BW, BY, BZ, CA, CH, CN, CO, CR, CU, CZ, DE, DK, DM, DO, DZ, EC, EE, EG, ES, FI, GB, GD, GE, GH, GM, GT, HN, HR, HU, ID, IL, IN, IS, JP, KE, KG, KM, KN, KP, KR, KZ, LA, LC, LK, LR, LS, LT, LU, LY, MA, MD, ME, MG, MK, MN, MW, MX, MY, MZ, NA, NG, NI, NO, NZ, OM, PG, PH, PL, PT, RO, RS, RU, SC, SD, SE, SG, SK, SL, SM, SV, SY, TJ, TM, TN, TR, TT, TZ, UA, UG, US, UZ, VC, VN, ZA, ZM, ZW.

(84) Designated States *(unless otherwise indicated, for every kind of regional protection available)*: ARIPO (BW, GH, GM, KE, LS, MW, MZ, NA, SD, SL, SZ, TZ, UG, ZM, ZW), Eurasian (AM, AZ, BY, KG, KZ, MD, RU, TJ, TM), European (AT, BE, BG, CH, CY, CZ, DE, DK, EE, ES, FI, FR, GB, GR, HU, IE, IS, IT, LT, LU, LV, MC, MT, NL, PL, PT, RO, SE, SI, SK, TR), OAPI (BF, BJ, CF, CG, CI, CM, GA, GN, GQ, GW, ML, MR, NE, SN, TD, TG).

[Continued on next page]

(54) Title: GAS DISTRIBUTION GRID FOR A POLYMERIZATION APPARATUS

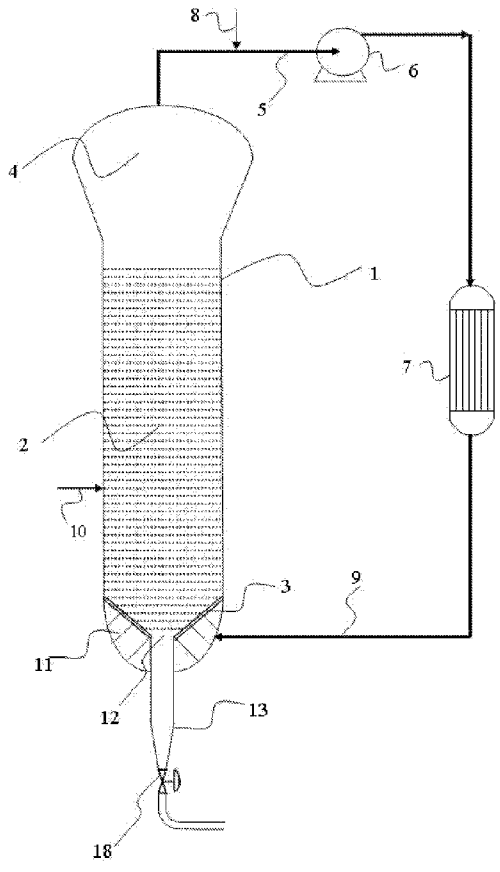

(57) Abstract: A gas distribution grid comprising a plurality of trays arranged to form the lateral walls of an inverted cone, said plurality of trays being attached each other to form slots in the overlapping area of adjacent trays.

WO 2008/074632 A1

Published:
— *with international search report*