(12) INTERNATIONAL APPLICATION PUBLISHED UNDER THE PATENT COOPERATION TREATY (PCT)

(19) World Intellectual Property Organization
International Bureau

(43) International Publication Date
24 June 2010 (24.06.2010)

PCT

(10) International Publication Number
WO 2010/071419 A1

(51) International Patent Classification:
B01D 63/02 (2006.01) *B01D 65/00* (2006.01)
B01D 63/04 (2006.01)

(21) International Application Number:
PCT/NL2009/050662

(22) International Filing Date:
4 November 2009 (04.11.2009)

(25) Filing Language: Dutch

(26) Publication Language: English

(30) Priority Data:
1036319 16 December 2008 (16.12.2008) NL

(71) Applicant *(for all designated States except US)*: **Demand Holding B.V.** [NL/NL]; Fuutweg 17, NL-7442 CL Nijverdal (NL).

(72) Inventor: **BERENDS, Hendrik Johan Ferdinand**; Zuidelijke Hoofddijk 12, NL-7443 RT Nijverdal (NL).

(74) Agent: **BARTELDS, Erik**; Sweelinckplein 1, NL-2517 GK Den Haag (NL).

(81) Designated States *(unless otherwise indicated, for every kind of national protection available)*: AE, AG, AL, AM, AO, AT, AU, AZ, BA, BB, BG, BH, BR, BW, BY, BZ, CA, CH, CL, CN, CO, CR, CU, CZ, DE, DK, DM, DO, DZ, EC, EE, EG, ES, FI, GB, GD, GE, GH, GM, GT, HN, HR, HU, ID, IL, IN, IS, JP, KE, KG, KM, KN, KP, KR, KZ, LA, LC, LK, LR, LS, LT, LU, LY, MA, MD, ME, MG, MK, MN, MW, MX, MY, MZ, NA, NG, NI, NO, NZ, OM, PE, PG, PH, PL, PT, RO, RS, RU, SC, SD, SE, SG, SK, SL, SM, ST, SV, SY, TJ, TM, TN, TR, TT, TZ, UA, UG, US, UZ, VC, VN, ZA, ZM, ZW.

(84) Designated States *(unless otherwise indicated, for every kind of regional protection available)*: ARIPO (BW, GH, GM, KE, LS, MW, MZ, NA, SD, SL, SZ, TZ, UG, ZM, ZW), Eurasian (AM, AZ, BY, KG, KZ, MD, RU, TJ, TM), European (AT, BE, BG, CH, CY, CZ, DE, DK, EE, ES, FI, FR, GB, GR, HR, HU, IE, IS, IT, LT, LU, LV, MC, MK, MT, NL, NO, PL, PT, RO, SE, SI, SK, SM,

[Continued on next page]

(54) Title: METHOD FOR FORMING A MEMBRANE HOLDER AND MEMBRANE HOLDER THUS FORMED

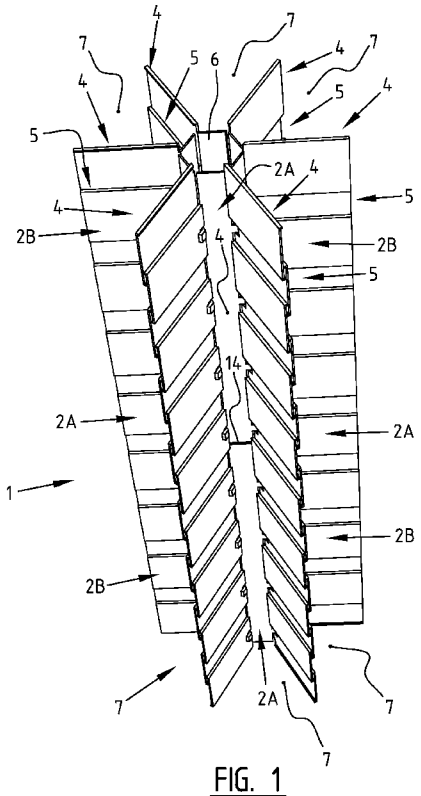

FIG. 1

(57) Abstract: The invention relates to a method for forming a membrane holder for applying in a tube filter, by mutually connecting a number of cassettes of V-shaped cross-sectional form, wherein a plurality of cassettes are placed successively and connected to each other in longitudinal direction in a row. The V-shaped cross -section of each cassette can herein be defined by two walls and a bridge piece located therebetween, wherein each wall has a number of cut-away portions. The cassettes can be mutually connected such that a cut-away portion in a wall of the one cassette is bridged by a full wall part of the other cassette. The cassettes can be mutually connected close to the base of their V-shaped cross-section, for instance by being snapped together. The invention further relates to a membrane holder obtained by applying this method, to cassettes for use in the method and in the membrane holder, and to a tube filter in which such a membrane holder is applied.

WO 2010/071419 A1

TR), OAPI (BF, BJ, CF, CG, CI, CM, GA, GN, GQ, GW, ML, MR, NE, SN, TD, TG).

Published:

— *with international search report (Art. 21(3))*