(12) INTERNATIONAL APPLICATION PUBLISHED UNDER THE PATENT COOPERATION TREATY (PCT)

(19) World Intellectual Property Organization
International Bureau

(43) International Publication Date
25 September 2025 (25.09.2025)

WIPO | PCT

(10) International Publication Number
WO 2025/199396 A1

(51) International Patent Classification:
B01D 53/50 (2006.01)

(21) International Application Number:
PCT/US2025/020845

(22) International Filing Date:
21 March 2025 (21.03.2025)

(25) Filing Language: English

(26) Publication Language: English

(30) Priority Data:
63/568,076 21 March 2024 (21.03.2024) US

(71) Applicant *(for US only)*: **SHELL USA, INC.** [US/US]; P.O. BOX 576, Houston, Texas 77001-0576 (US).

(71) Applicant *(for all designated States except CV, MU, US)*: **SHELL INTERNATIONALE RESEARCH MAATSCHAPPIJ B.V.** [NL/NL]; Carel van Bylandtlaan 30, NL-2596 The Hague (NL).

(72) Inventors: **KLINK, Wassim**; 3333 Hwy 6 South, Houston, Texas 77082-3101 (US). **ZHANG, Wenzhong**; 3333 Hwy 6 South, Houston, Texas 77082-3101 (US).

(74) Agent: **REYES, Priscilla T.**; SHELL USA, INC., P.O. Box 576, Houston, Texas 77001-057 (US).

(81) Designated States *(unless otherwise indicated, for every kind of national protection available)*: AE, AG, AL, AM, AO, AT, AU, AZ, BA, BB, BG, BH, BN, BR, BW, BY, BZ, CA, CH, CL, CN, CO, CR, CU, CV, CZ, DE, DJ, DK, DM, DO, DZ, EC, EE, EG, ES, FI, GB, GD, GE, GH, GM, GT, HN, HR, HU, ID, IL, IN, IQ, IR, IS, IT, JM, JO, JP, KE, KG, KH, KN, KP, KR, KW, KZ, LA, LC, LK, LR, LS, LU, LY, MA, MD, MG, MK, MN, MU, MW, MX, MY, MZ, NA, NG, NI, NO, NZ, OM, PA, PE, PG, PH, PL, PT, QA, RO, RS, RU, RW, SA, SC, SD, SE, SG, SK, SL, ST, SV, SY, TH, TJ, TM, TN, TR, TT, TZ, UA, UG, US, UY, UZ, VC, VN, WS, ZA, ZM, ZW.

(84) Designated States *(unless otherwise indicated, for every kind of regional protection available)*: ARIPO (BW, CV, GH, GM, KE, LR, LS, MW, MZ, NA, RW, SC, SD, SL, ST, SZ, TZ, UG, ZM, ZW), Eurasian (AM, AZ, BY, KG, KZ, RU, TJ, TM), European (AL, AT, BE, BG, CH, CY, CZ, DE, DK, EE, ES, FI, FR, GB, GR, HR, HU, IE, IS, IT, LT, LU, LV, MC, ME, MK, MT, NL, NO, PL, PT, RO, RS, SE, SI, SK, SM, TR), OAPI (BF, BJ, CF, CG, CI, CM, GA, GN, GQ, GW, KM, ML, MR, NE, SN, TD, TG).

Published:
— *with international search report (Art. 21(3))*

(54) Title: REMOVAL OF CATALYST POISONS

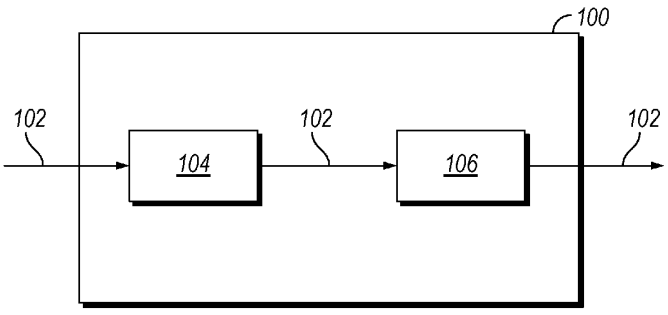

FIG. 1

(57) Abstract: A method for removing sulfur from a gas stream that includes contacting the gas stream having at least one sulfur species with a hopcalite to remove an amount of the at least one sulfur species and provide a reduced-sulfur feed stream.

WO 2025/199396 A1