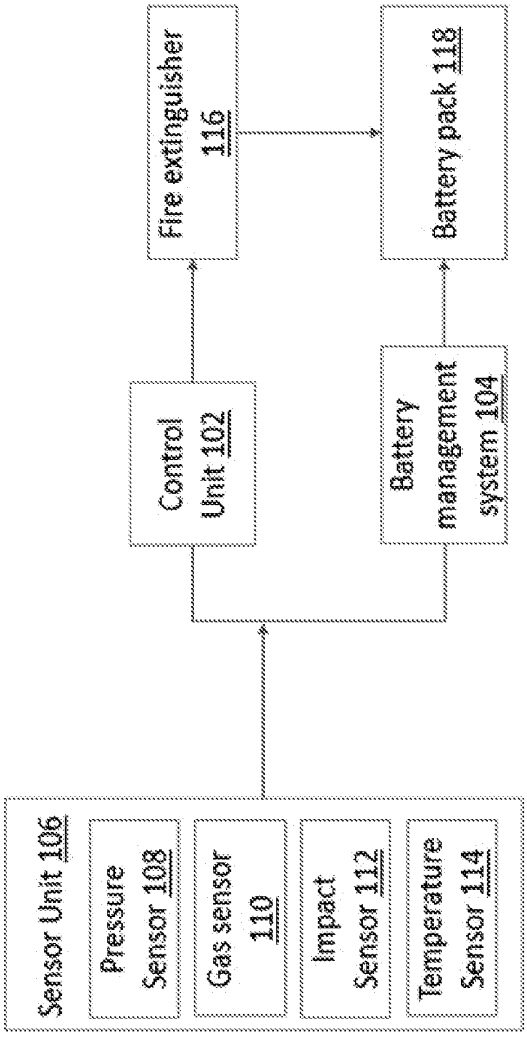
Fire extinguisher 116
Battery pack 118
Control Unit 102
Battery management system 104
Sensor Unit 106
Pressure Sensor 108
Gas sensor 110
Impact Sensor 112
Temperature Sensor 114

Fig. 1

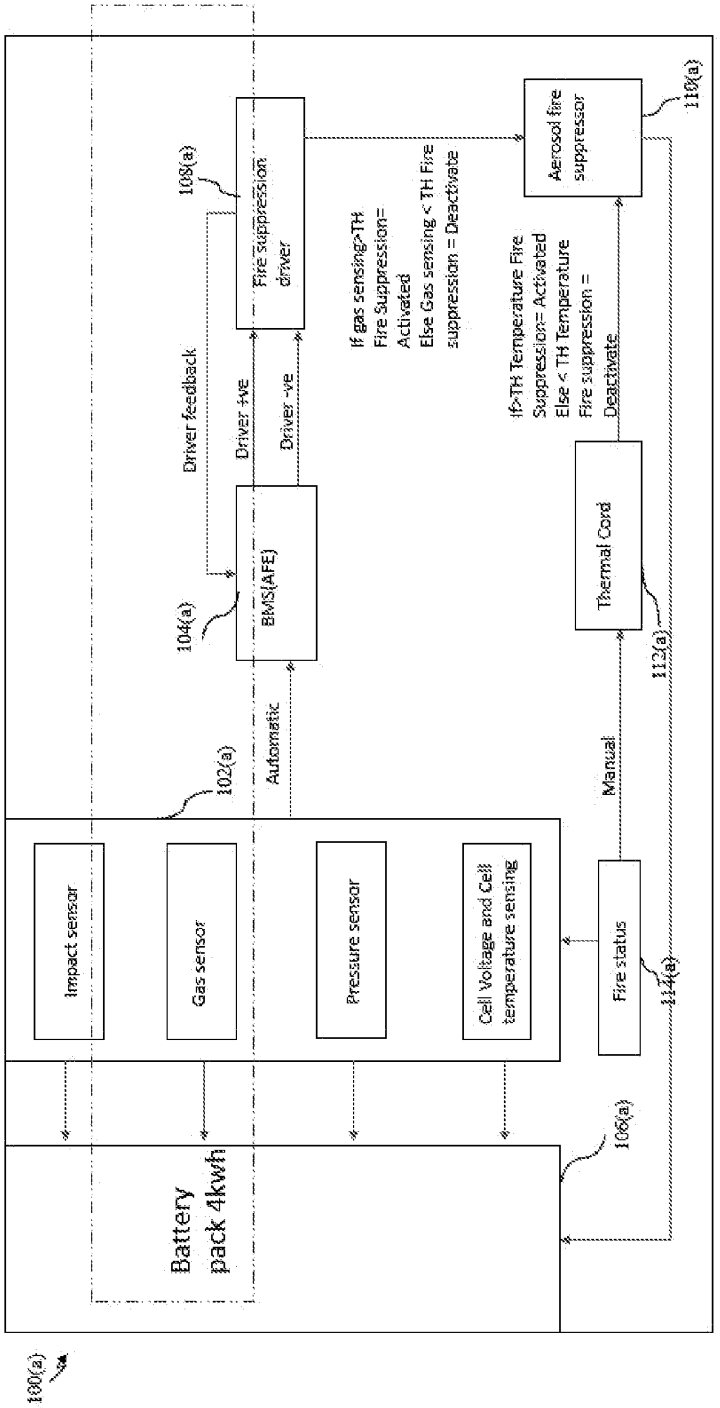
100(a)
Battery pack 4kwh
Impact sensor
Gas sensor
Pressure sensor
Cell Voltage and Cell temperature sensing
102(a)
106(a)
BMS(AFE)
104(a)
Fire Suppression driver
108(a)
Aerosol fire suppressor
110(a)
Thermal Cord
112(a)
Fire status
114(a)
Automatic
Manual
Driver feedback
Driver +ve
Driver -ve
If gas sensing>TH Fire Suppression= Activated Else Gas sensing < TH Fire suppression = Deactivate
If>TH Temperature Fire Suppression= Activated Else < TH Temperature Fire suppression = Deactivate

Fig. 1(a)

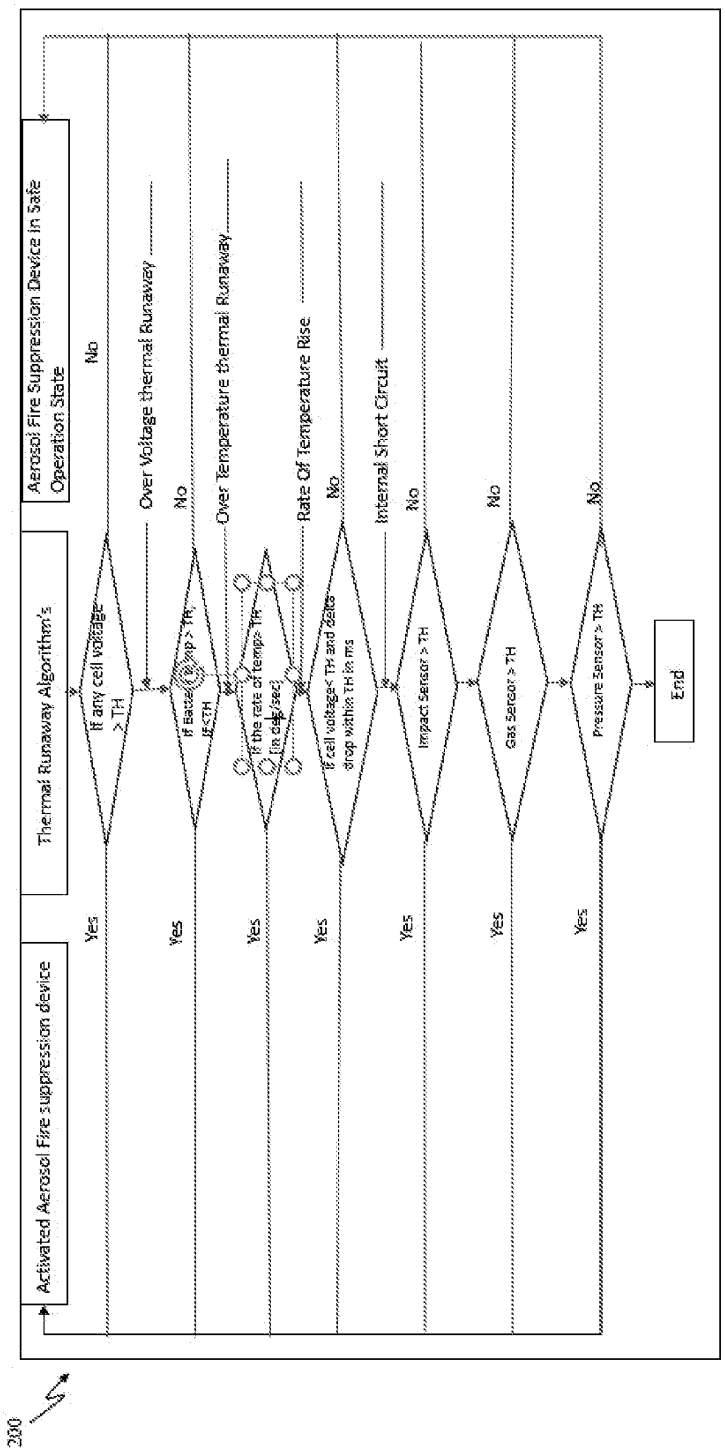
200
Activated Aerosol Fire suppression device
Thermal Runaway Algorithm's
Aerosol Fire Suppression Device in Safe Operation State
Yes
If any cell voltage > TH
No
Over Voltage thermal Runaway
Yes
If Batte
If<TH
No
Over Temperature thermal Runaway
Yes
If the rate of temp> TH
[in deg/sec]
Rate Of Temperature Rise
Yes
If cell voltage< TH and delta drop within TH in ms
No
Internal Short Circuit
Yes
Impact Sensor > TH
No
Yes
Gas Sensor > TH
No
Yes
Pressure Sensor > TH
No
End

Fig. 2

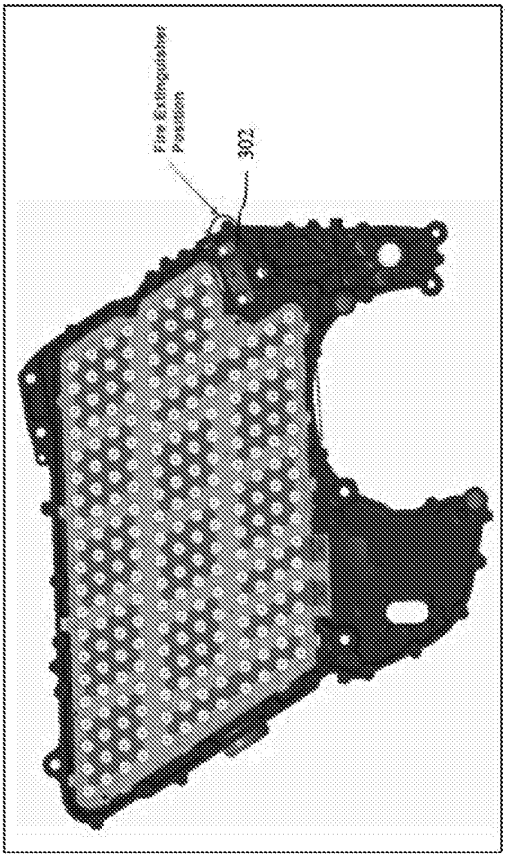

Fig. 3

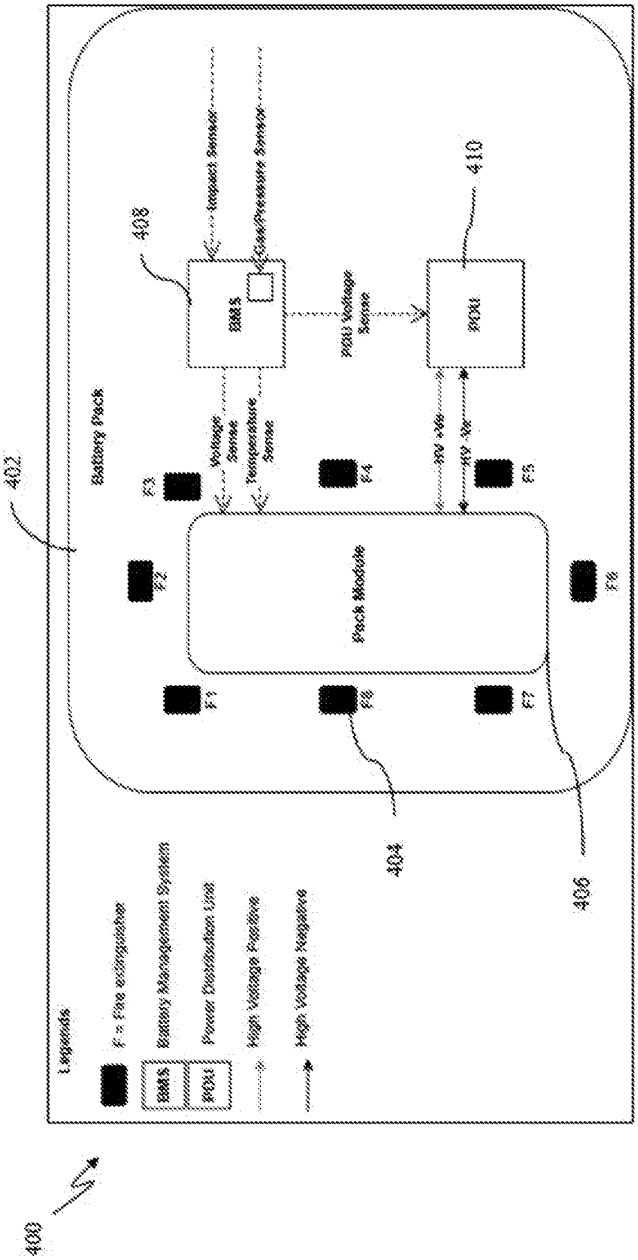
400
402
Battery Pack
Legends
F = Fire extinguisher
Battery Management System
Power Distribution Unit
High Voltage Positive
High Voltage Negative
BMS
PDU
F1
F2
F3
F4
F5
F6
F7
F8
Pack Module
404
406
408
410
Impact Sensor
Gas/Pressure Sensor
Voltage Sense
Temperature Sense
PDU Voltage Sense
HV +ve
HV -ve

Fig. 4

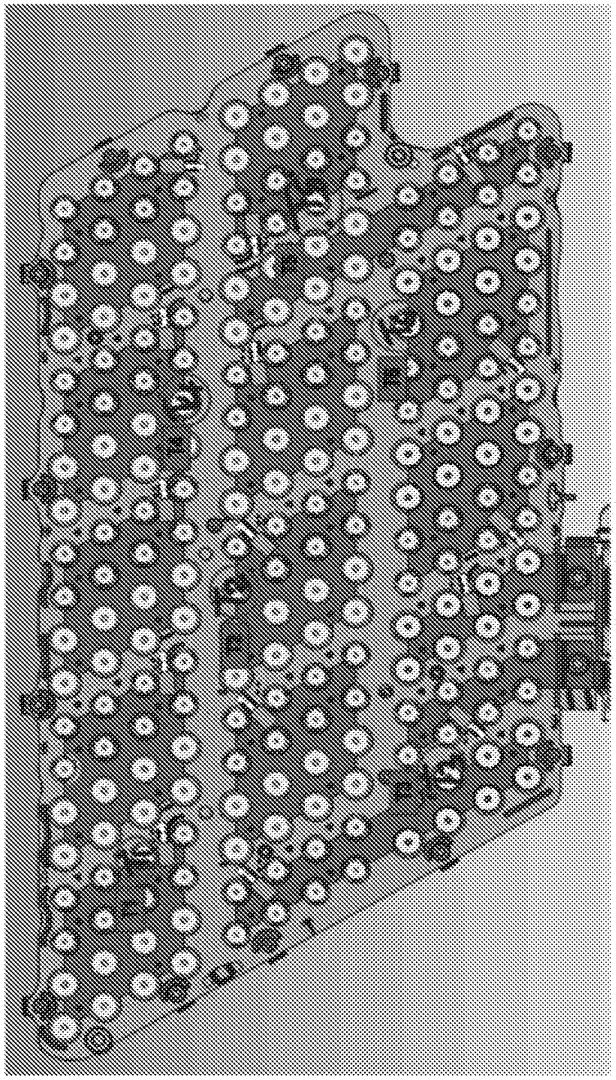

Fig. 5

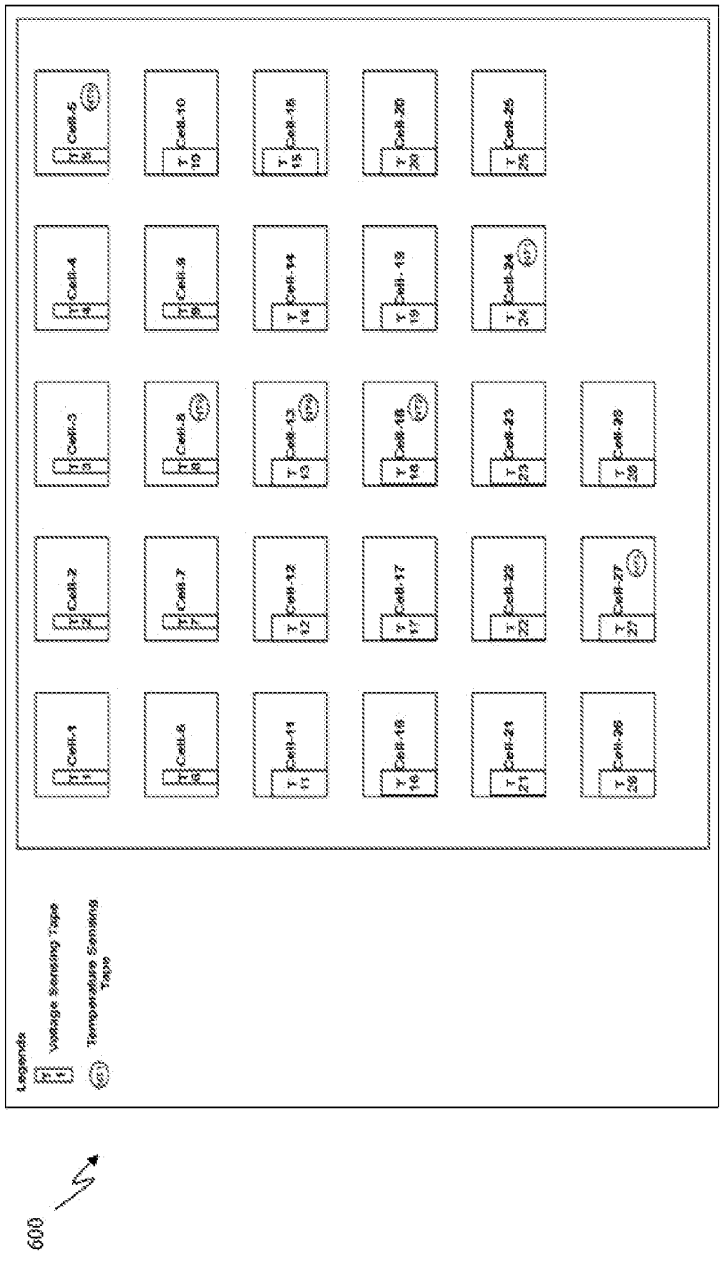
600
Legends
Voltage Sensing Tape
Temperature Sensing Tape
Cell-1
Cell-2
Cell-3
Cell-4
Cell-5
Cell-6
Cell-7
Cell-8
Cell-9
Cell-10
Cell-11
Cell-12
Cell-13
Cell-14
Cell-15
Cell-16
Cell-17
Cell-18
Cell-19
Cell-20
Cell-21
Cell-22
Cell-23
Cell-24
Cell-25
Cell-26
Cell-27
Cell-28

Fig. 6

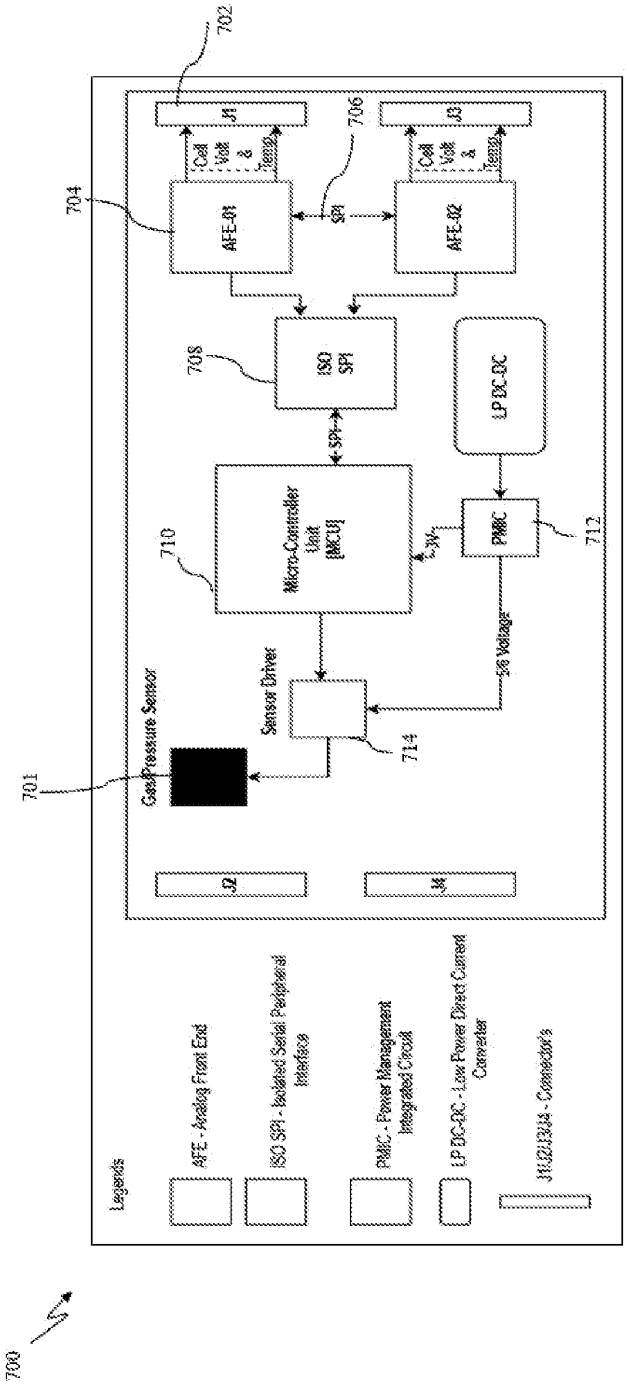
700
701
702
704
706
708
710
712
714
J1
J2
J3
J4
Cell Volt & Temp
AFE-01
SPI
AFE-02
ISO SPI
SPI
LP DC-DC
Micro-Controller Unit (MCU)
3V
PMIC
5V Voltage
Sensor Driver
Gas Pressure Sensor
Legends
AFE - Analog Front End
ISO SPI - Isolated Serial Peripheral Interface
PMIC - Power Management Integrated Circuit
LP DC-DC - Low Power Direct Current Converter
J1/J2/J3/J4 - Connectors

Fig. 7

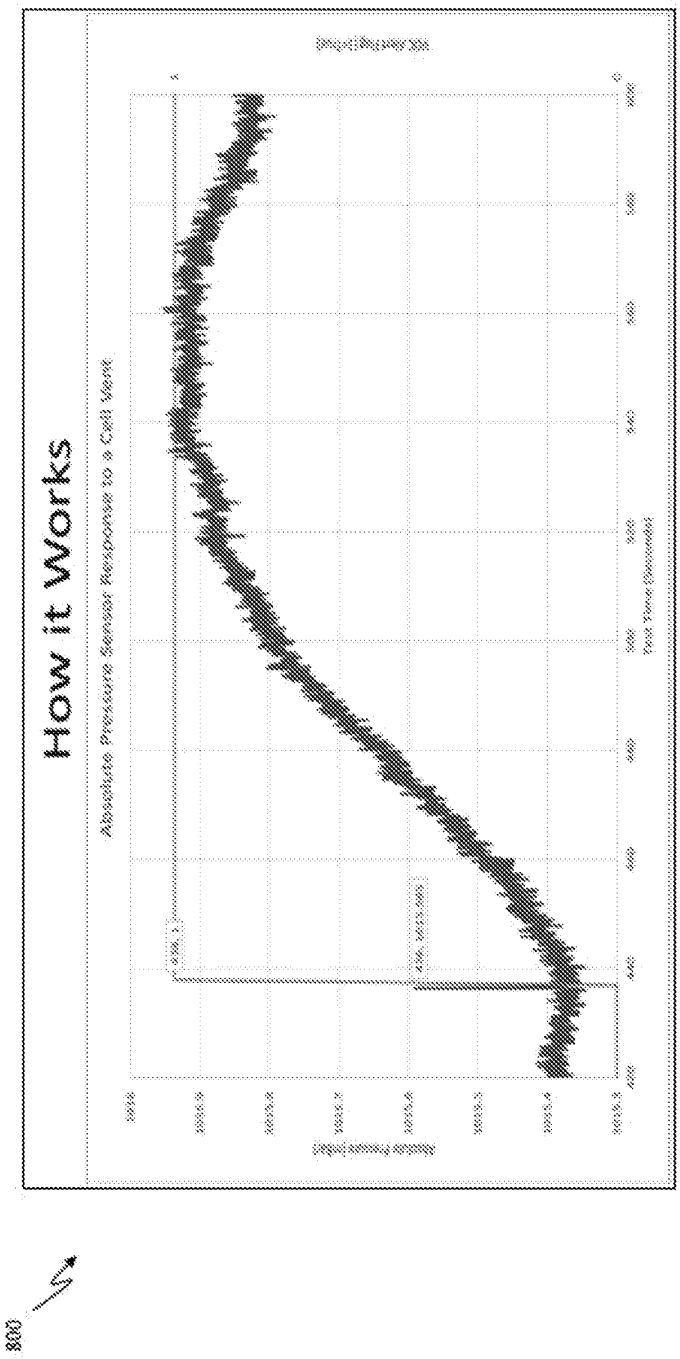
How it Works
Absolute Pressure Sensor Response to a Cell Vent
800

Fig. 8