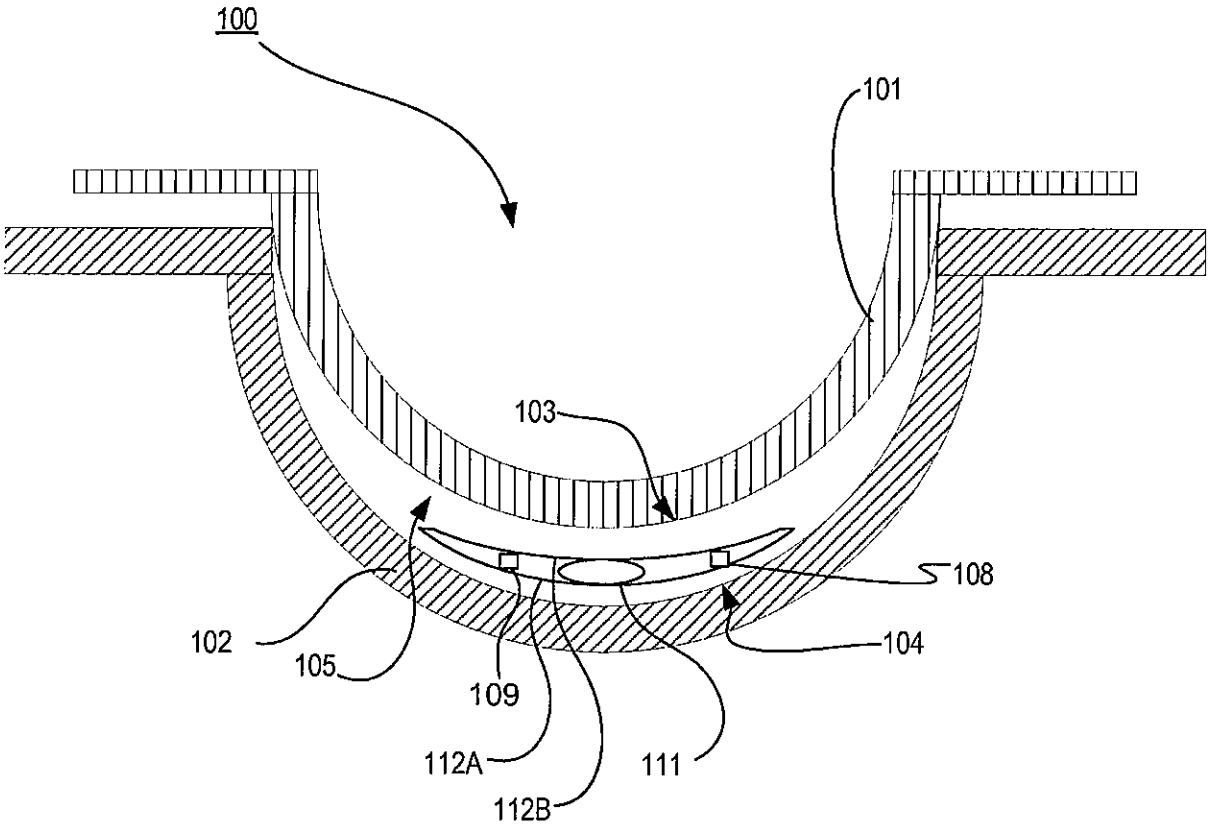

FIG. 1

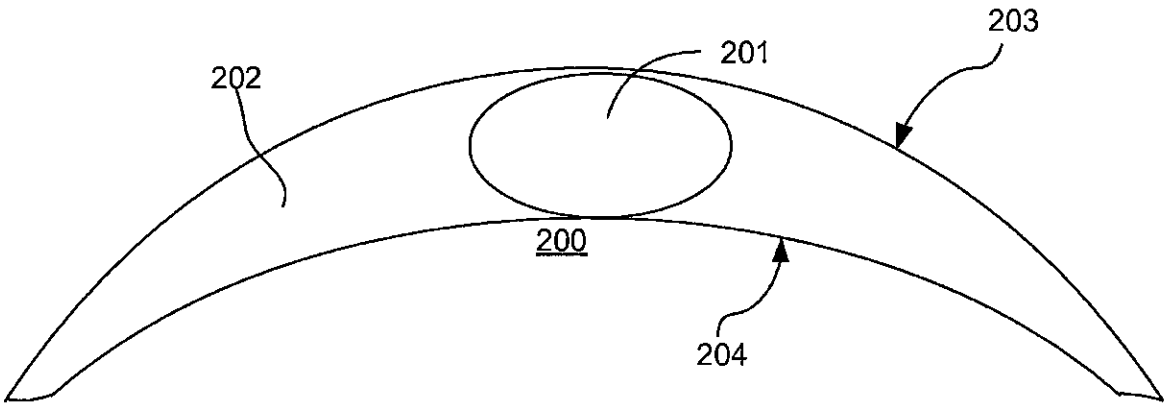

FIG. 2

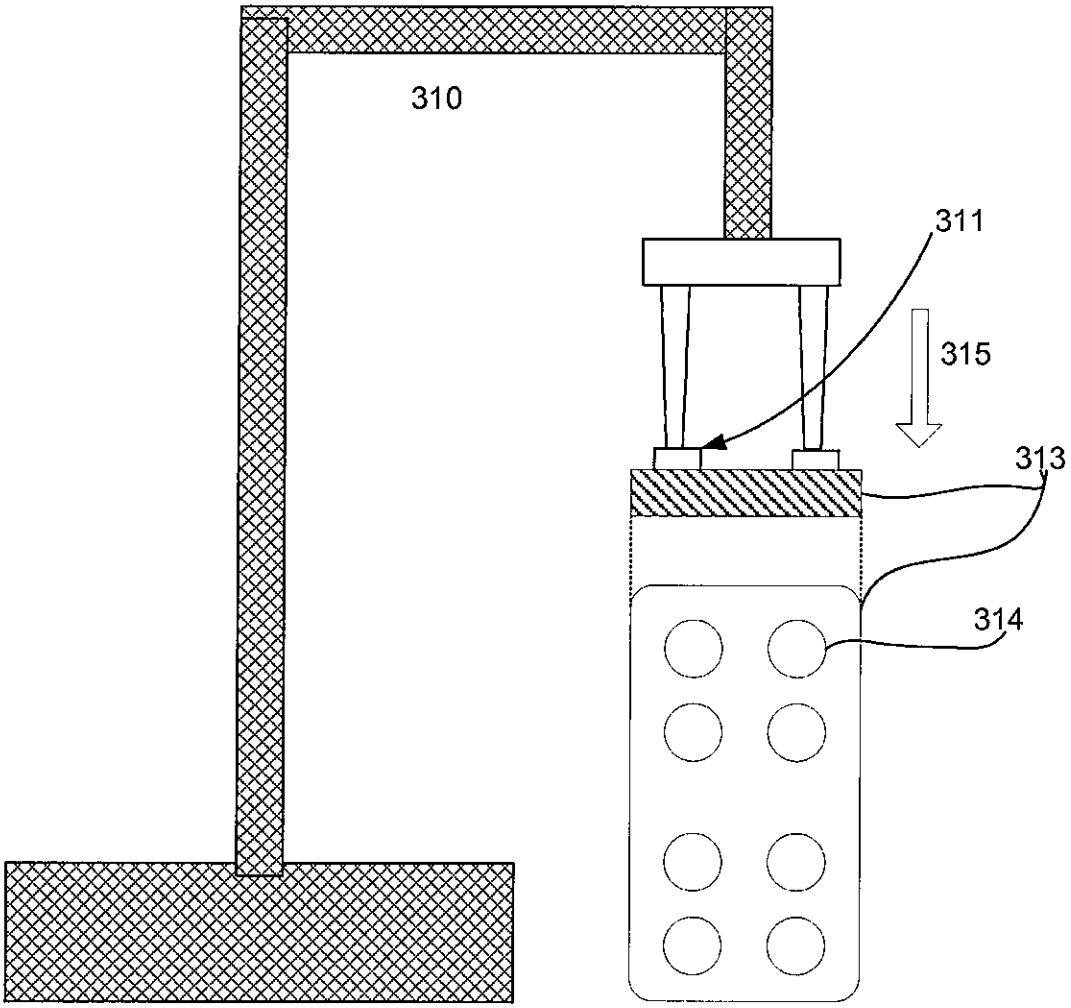

FIG. 3

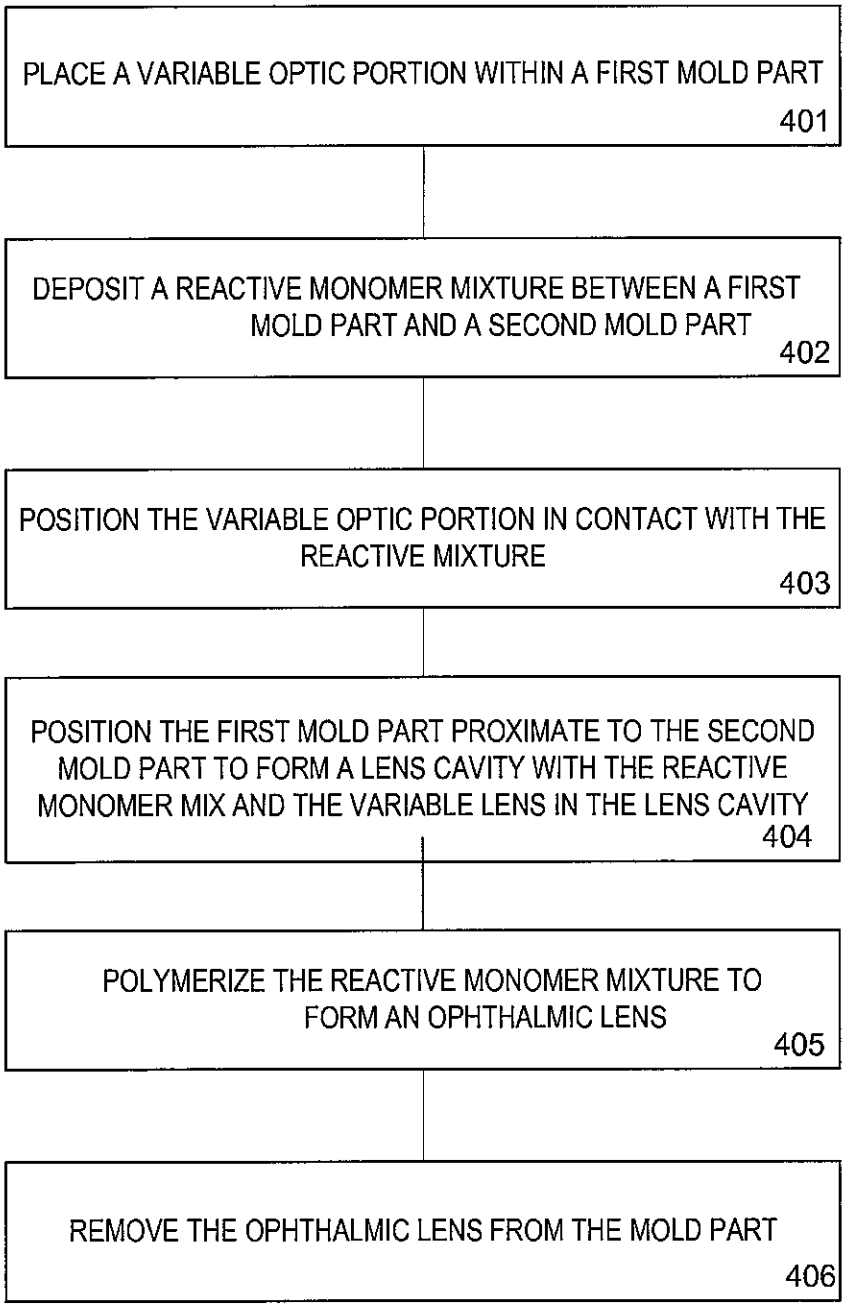
PLACE A VARIABLE OPTIC PORTION WITHIN A FIRST MOLD PART
401
DEPOSIT A REACTIVE MONOMER MIXTURE BETWEEN A FIRST MOLD PART AND A SECOND MOLD PART
402
POSITION THE VARIABLE OPTIC PORTION IN CONTACT WITH THE REACTIVE MIXTURE
403
POSITION THE FIRST MOLD PART PROXIMATE TO THE SECOND MOLD PART TO FORM A LENS CAVITY WITH THE REACTIVE MONOMER MIX AND THE VARIABLE LENS IN THE LENS CAVITY
404
POLYMERIZE THE REACTIVE MONOMER MIXTURE TO FORM AN OPHTHALMIC LENS
405
REMOVE THE OPHTHALMIC LENS FROM THE MOLD PART
406

FIG. 4

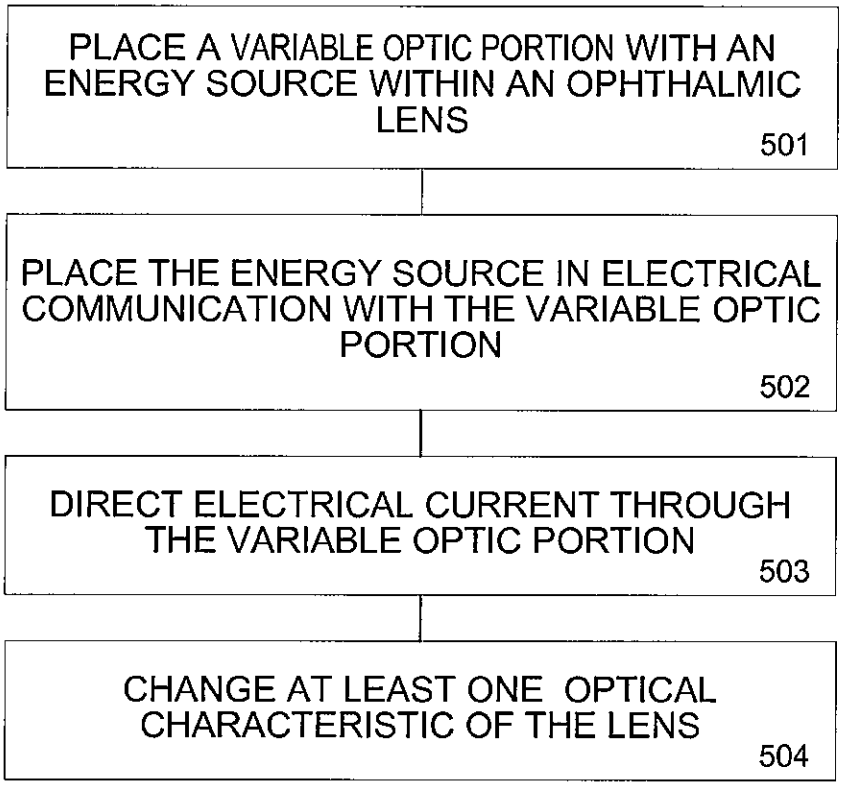
PLACE A VARIABLE OPTIC PORTION WITH AN ENERGY SOURCE WITHIN AN OPHTHALMIC LENS
501
PLACE THE ENERGY SOURCE IN ELECTRICAL COMMUNICATION WITH THE VARIABLE OPTIC PORTION
502
DIRECT ELECTRICAL CURRENT THROUGH THE VARIABLE OPTIC PORTION
503
CHANGE AT LEAST ONE OPTICAL CHARACTERISTIC OF THE LENS
504

FIG. 5

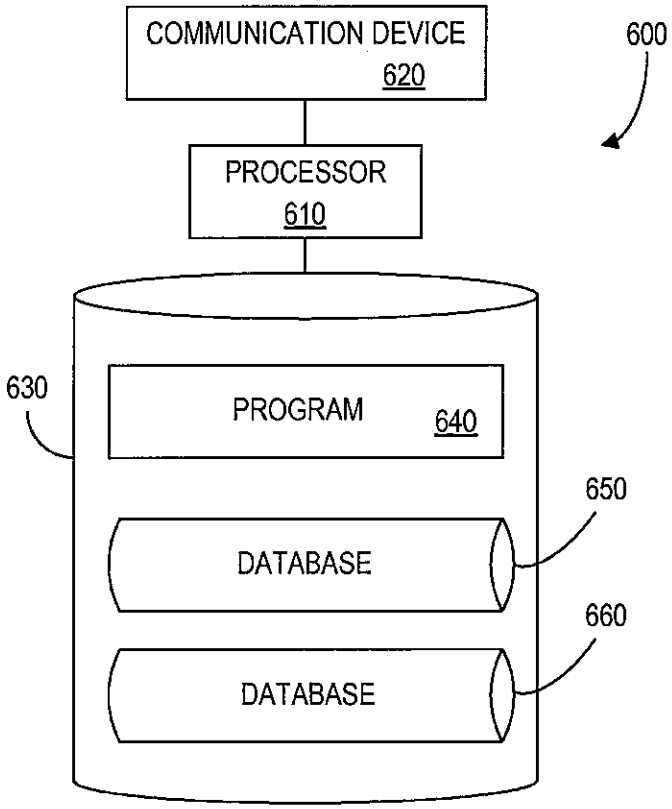
COMMUNICATION DEVICE
620
600
PROCESSOR
610
630
PROGRAM
640
650
DATABASE
660
DATABASE

FIG. 6

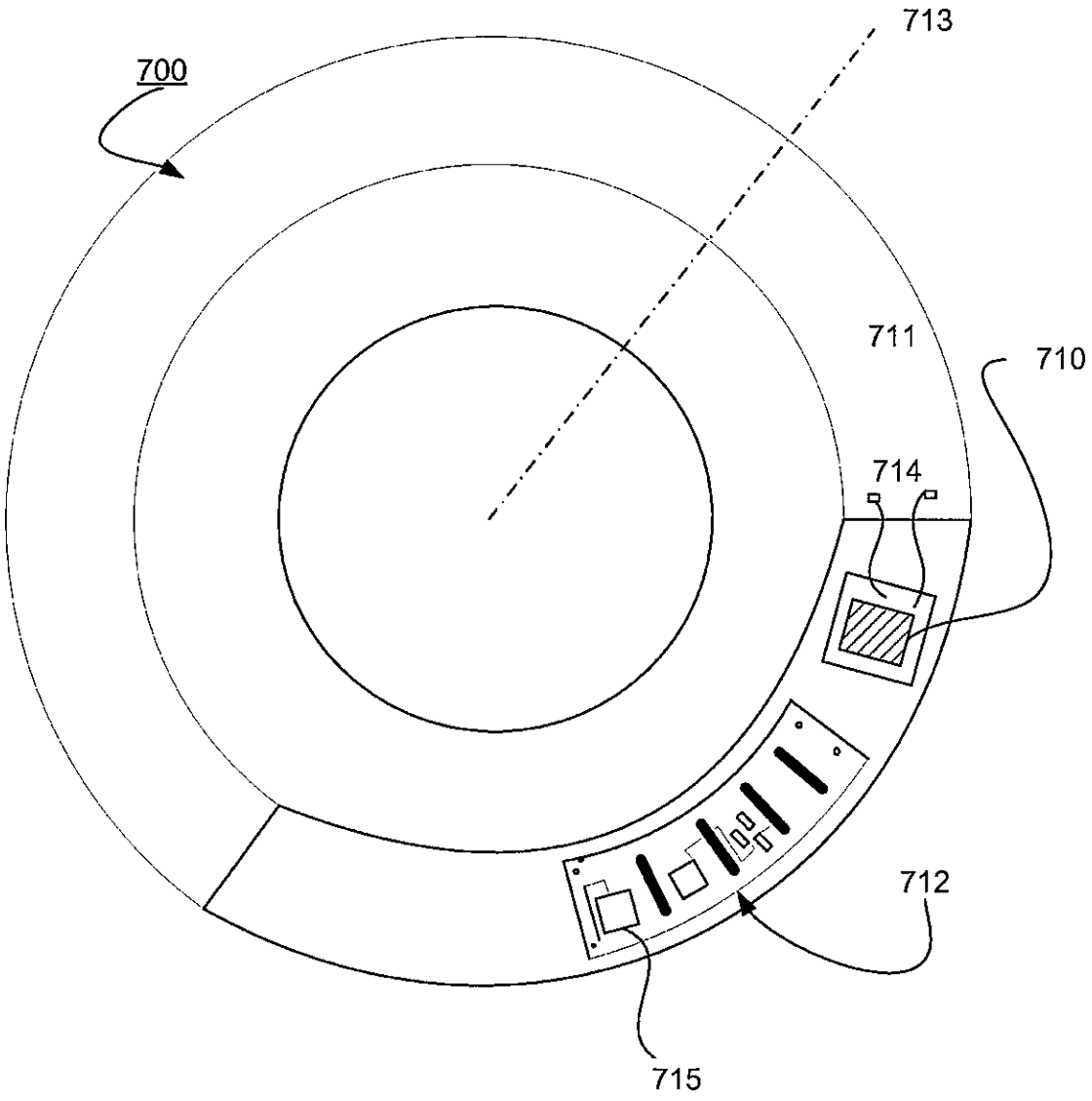

FIG. 7

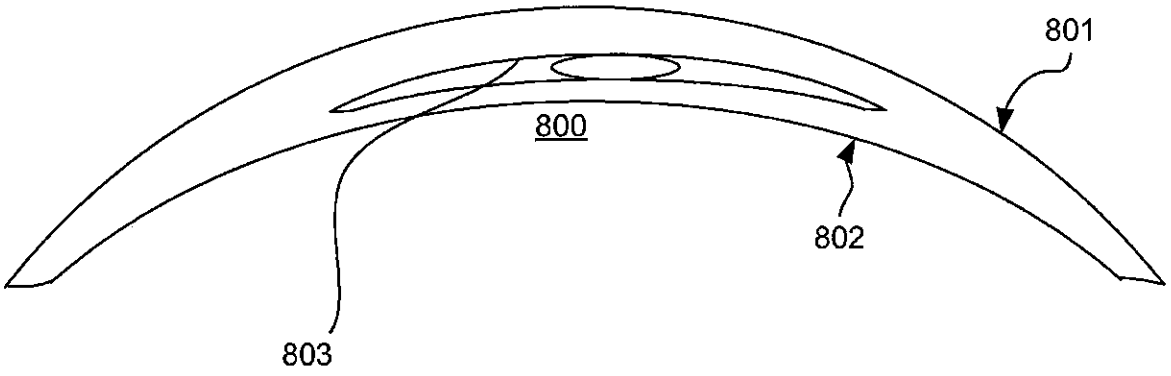

FIG. 8