(12) INTERNATIONAL APPLICATION PUBLISHED UNDER THE PATENT COOPERATION TREATY (PCT)

(19) World Intellectual Property Organization
International Bureau

(43) International Publication Date
2 April 2009 (02.04.2009)

PCT

(10) International Publication Number
WO 2009/040542 A3

(51) International Patent Classification:
C23C 16/44 (2006.01) *B05D 7/24* (2006.01)

(21) International Application Number:
PCT/GB2008/003271

(22) International Filing Date:
25 September 2008 (25.09.2008)

(25) Filing Language: English

(26) Publication Language: English

(30) Priority Data:
0718801.4 25 September 2007 (25.09.2007) GB

(71) Applicant *(for all designated States except US)*: **P2I LIMITED** [GB/GB]; Unit 14, Central 127, Milton Park, Abingdon, Oxfordshire OX14 4SA (GB).

(72) Inventor; and

(75) Inventor/Applicant *(for US only)*: **WOODCOCK, Malcolm** [GB/GB]; Shotover Cleve, The Ridings, Headington, Oxford OX3 8TB (GB).

(74) Agent: **WALKER, Neville**; ipconsult, 21A Commercial Road, Swanage, Dorset BH19 1DF (GB).

(81) Designated States *(unless otherwise indicated, for every kind of national protection available)*: AE, AG, AL, AM, AO, AT, AU, AZ, BA, BB, BG, BH, BR, BW, BY, BZ, CA, CH, CN, CO, CR, CU, CZ, DE, DK, DM, DO, DZ, EC, EE, EG, ES, FI, GB, GD, GE, GH, GM, GT, HN, HR, HU, ID, IL, IN, IS, JP, KE, KG, KM, KN, KP, KR, KZ, LA, LC, LK, LR, LS, LT, LU, LY, MA, MD, ME, MG, MK, MN, MW, MX, MY, MZ, NA, NG, NI, NO, NZ, OM, PG, PH, PL, PT, RO, RS, RU, SC, SD, SE, SG, SK, SL, SM, ST, SV, SY, TJ, TM, TN, TR, TT, TZ, UA, UG, US, UZ, VC, VN, ZA, ZM, ZW.

(84) Designated States *(unless otherwise indicated, for every kind of regional protection available)*: ARIPO (BW, GH, GM, KE, LS, MW, MZ, NA, SD, SL, SZ, TZ, UG, ZM, ZW), Eurasian (AM, AZ, BY, KG, KZ, MD, RU, TJ, TM), European (AT, BE, BG, CH, CY, CZ, DE, DK, EE, ES, FI, FR, GB, GR, HR, HU, IE, IS, IT, LT, LU, LV, MC, MT, NL, NO, PL, PT, RO, SE, SI, SK, TR), OAPI (BF, BJ, CF, CG, CI, CM, GA, GN, GQ, GW, ML, MR, NE, SN, TD, TG).

Published:

— *with international search report (Art. 21(3))*

— *before the expiration of the time limit for amending the claims and to be republished in the event of receipt of amendments (Rule 48.2(h))*

(88) Date of publication of the international search report:
27 August 2009

(54) Title: VAPOUR DELIVERY SYSTEM

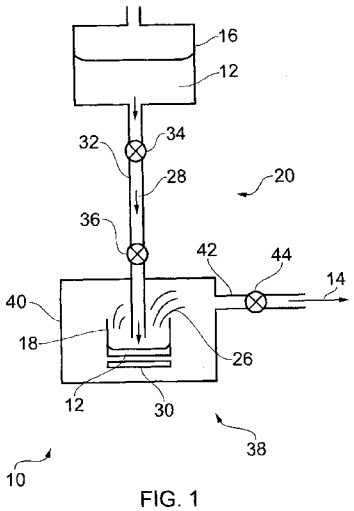

FIG. 1

(57) Abstract: A delivery system (10) for delivering species to a processing chamber (14) for imparting a desired surface property to one or more large items - such as shoes - comprises: a first container (16) for filling with liquid species; a second container (18) for receiving liquid species from the first container (16); a first flow control means (20) for controlling a volume of liquid species which is allowed to flow from the first container to the second container (18); evaporation means (30) for evaporating liquid species in the second container; and a second flow control means (38) for controlling flow of evaporated species from the second container (18) to a processing chamber (14).

WO 2009/040542 A3