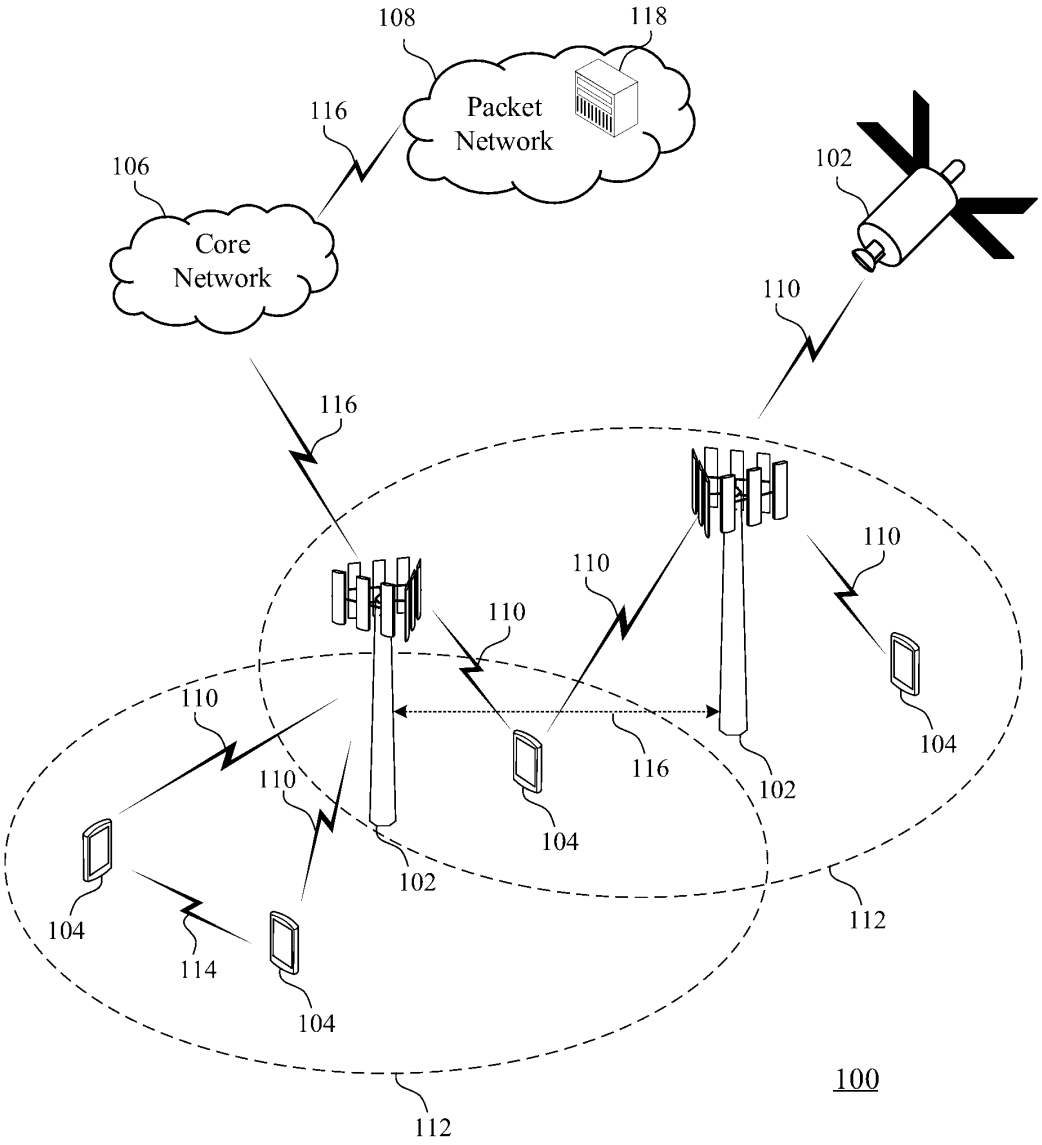
108
118
Packet
Network
116
106
Core
Network
102
110
116
110
110
110
110
110
116
102
104
104
102
104
104
114
104
112
112
100

FIG. 1A

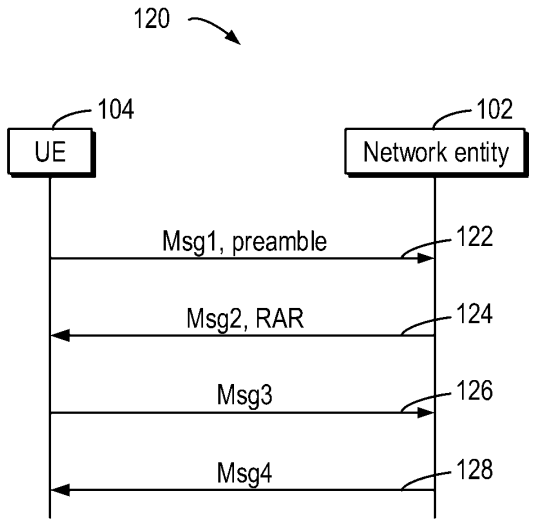
120
104
UE
102
Network entity
Msg1, preamble
122
Msg2, RAR
124
Msg3
126
Msg4
128

FIG. 1B

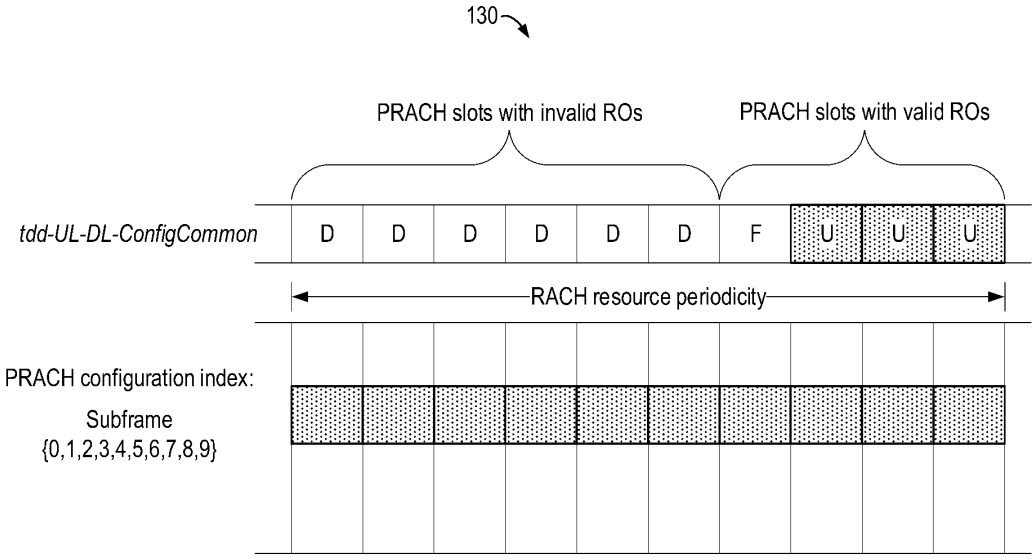
130
PRACH slots with invalid ROs
PRACH slots with valid ROs
tdd-UL-DL-ConfigCommon
D
D
D
D
D
D
F
U
U
U
RACH resource periodicity
PRACH configuration index:
Subframe
{0,1,2,3,4,5,6,7,8,9}

FIG. 1C

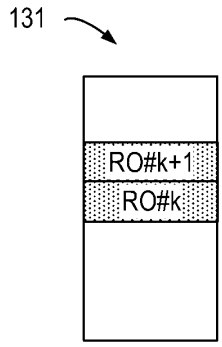
131
RO#k+1
RO#k

FIG. 1D

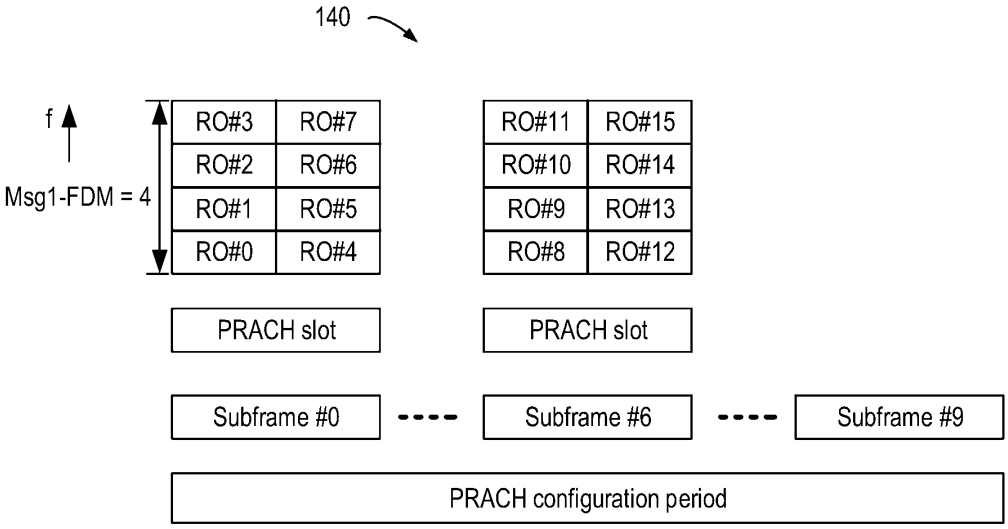
140
f
Msg1-FDM = 4
RO#3
RO#7
RO#2
RO#6
RO#1
RO#5
RO#0
RO#4
RO#11
RO#15
RO#10
RO#14
RO#9
RO#13
RO#8
RO#12
PRACH slot
PRACH slot
Subframe #0
Subframe #6
Subframe #9
PRACH configuration period

FIG. 1E

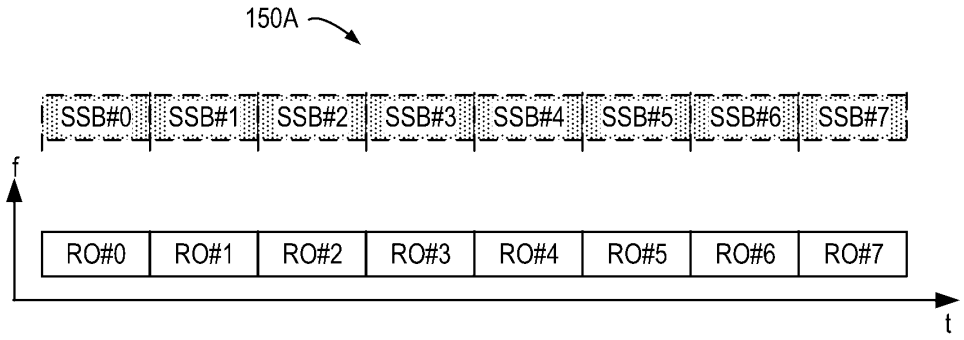

FIG. 1F

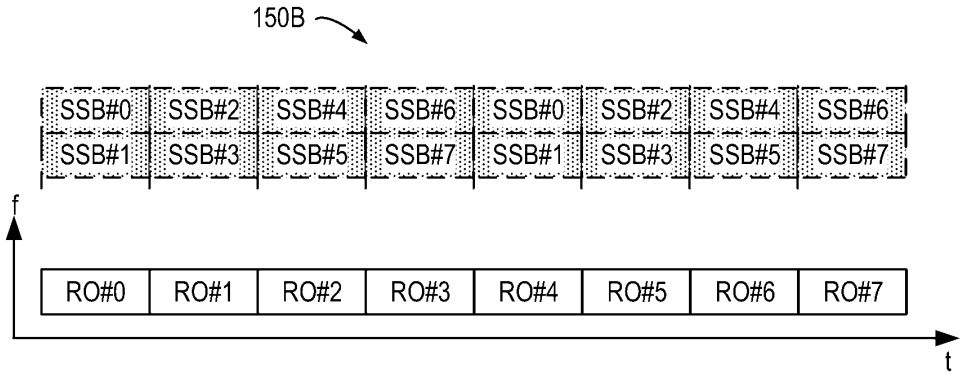

FIG. 1G

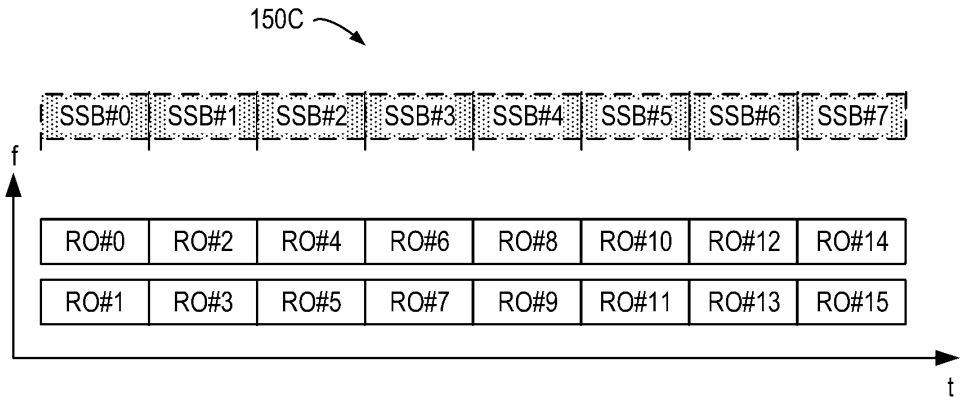

FIG. 1H

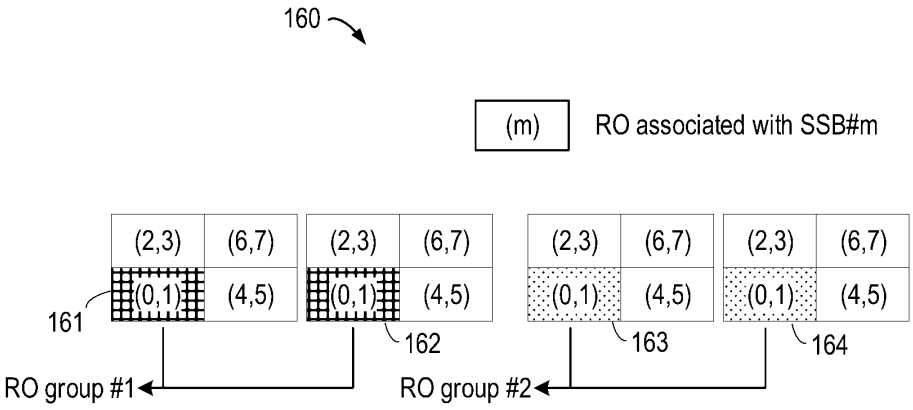
160
(m)
RO associated with SSB#m
(2,3)
(6,7)
(0,1)
(4,5)
161
162
163
164
RO group #1
RO group #2

FIG. 1I

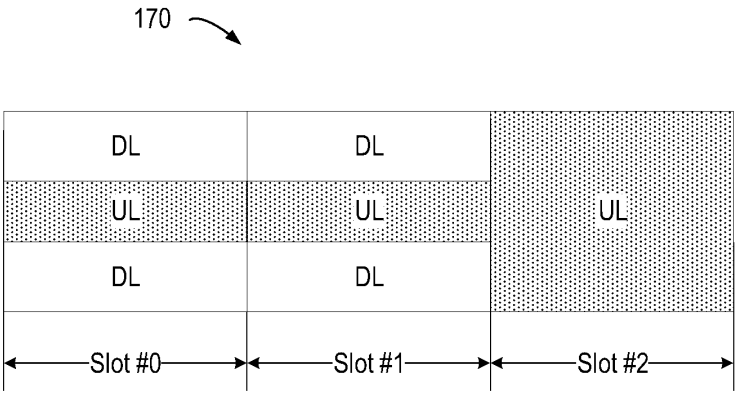
170
DL
UL
Slot #0
Slot #1
Slot #2

FIG. 1J

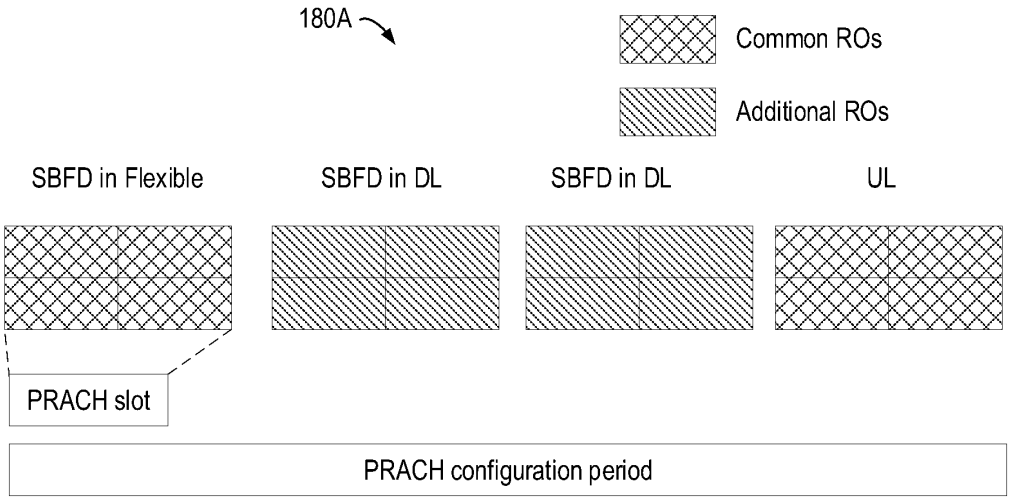
180A
Common ROs
Additional ROs
SBFD in Flexible
SBFD in DL
SBFD in DL
UL
PRACH slot
PRACH configuration period

FIG. 1K

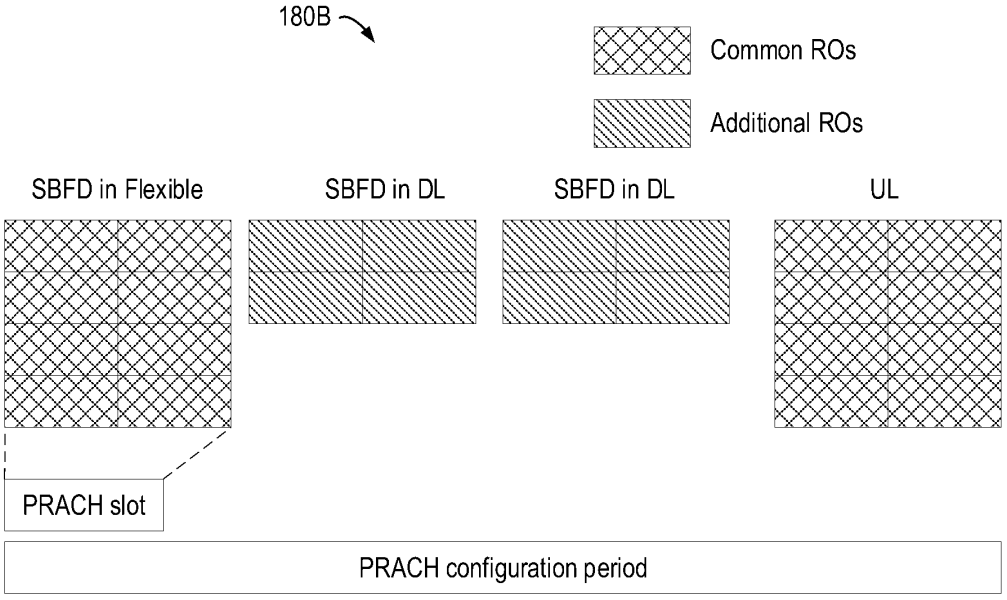
180B
Common ROs
Additional ROs
SBFD in Flexible
SBFD in DL
SBFD in DL
UL
PRACH slot
PRACH configuration period

FIG. 1L

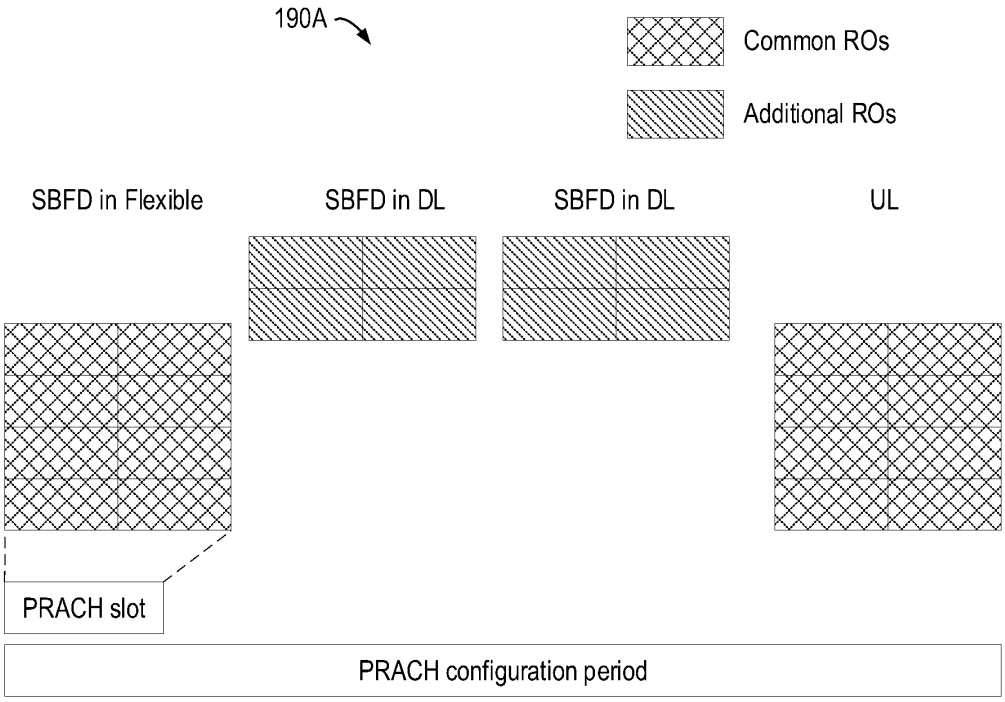
190A
Common ROs
Additional ROs
SBFD in Flexible
SBFD in DL
SBFD in DL
UL
PRACH slot
PRACH configuration period

FIG. 1M

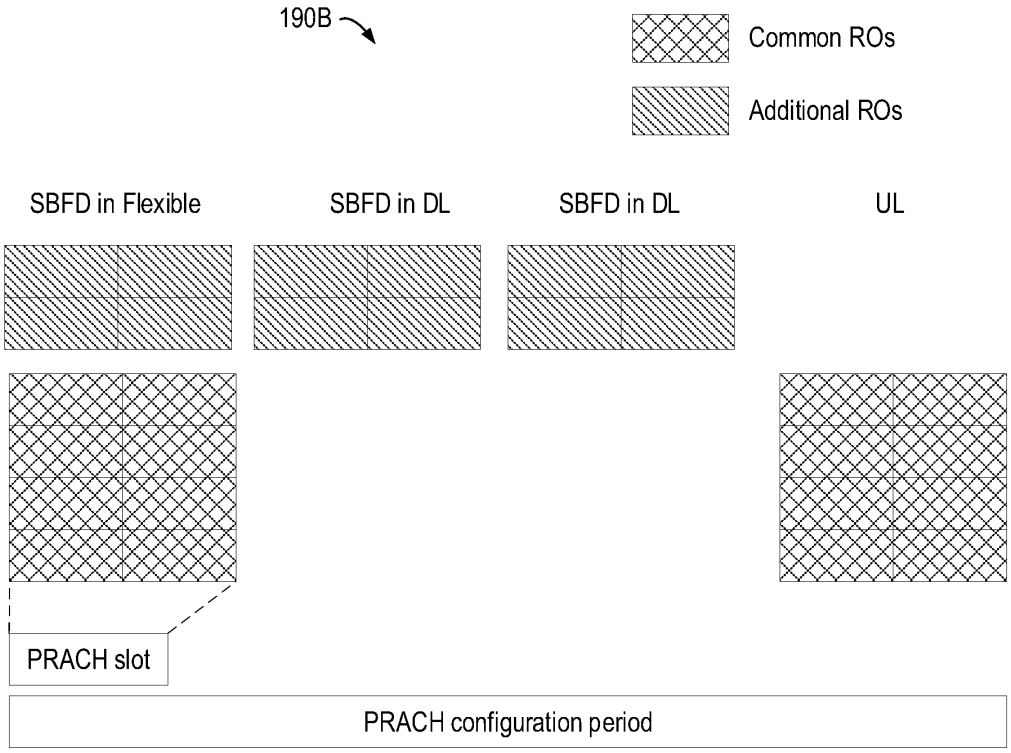
190B
Common ROs
Additional ROs
SBFD in Flexible
SBFD in DL
SBFD in DL
UL
PRACH slot
PRACH configuration period

FIG. 1N

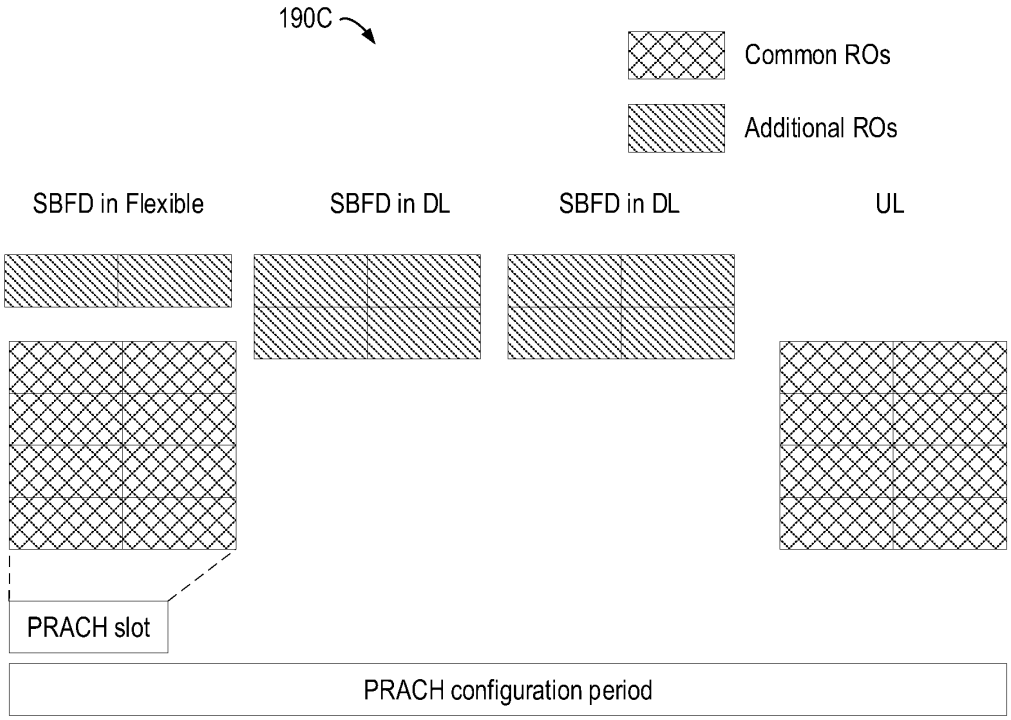
190C
Common ROs
Additional ROs
SBFD in Flexible
SBFD in DL
SBFD in DL
UL
PRACH slot
PRACH configuration period

FIG. 1O

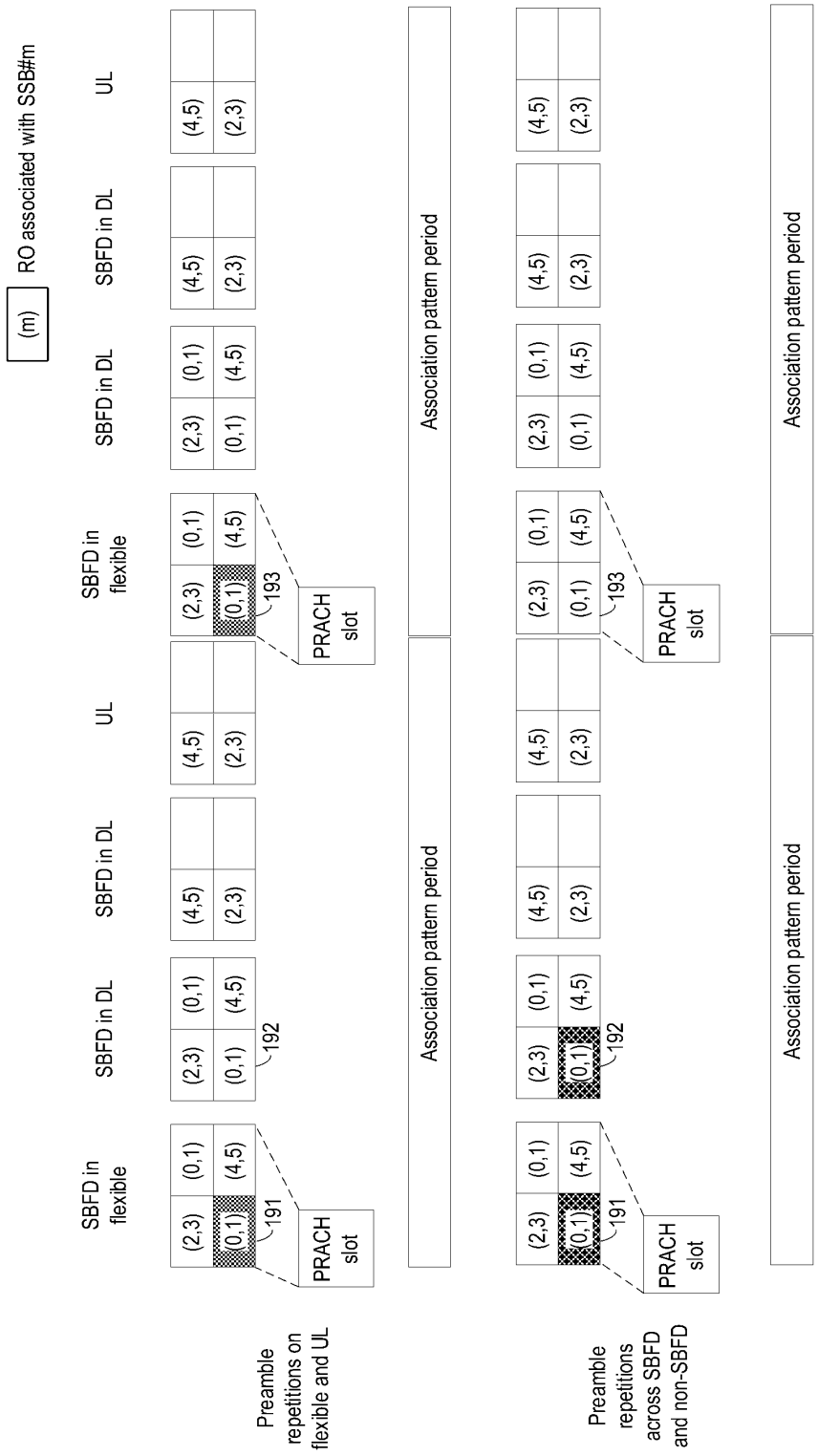
(m) RO associated with SSB#m
SBFD in flexible
SBFD in DL
SBFD in DL
UL
SBFD in flexible
SBFD in DL
SBFD in DL
UL
(2,3) (0,1)
(0,1) (4,5)
(4,5)
(2,3)
(2,3) (0,1)
(0,1) (4,5)
(4,5)
(2,3)
191
192
193
PRACH slot
Association pattern period
Preamble repetitions on flexible and UL
Preamble repetitions across SBFD and non-SBFD

FIG. 1P

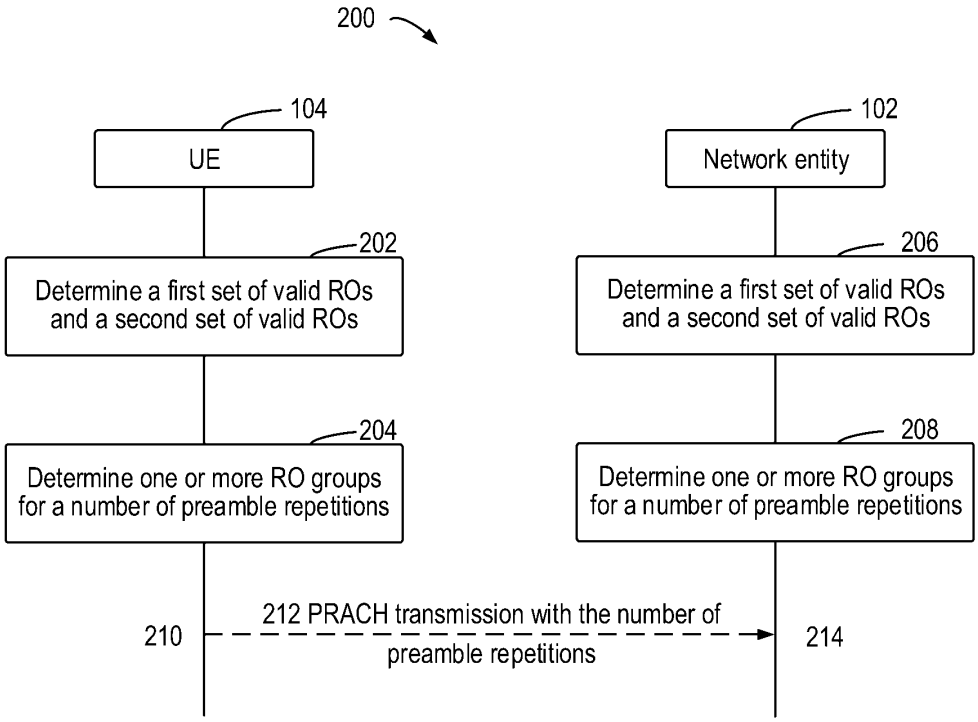
200
104
UE
102
Network entity
202
Determine a first set of valid ROs and a second set of valid ROs
206
Determine a first set of valid ROs and a second set of valid ROs
204
Determine one or more RO groups for a number of preamble repetitions
208
Determine one or more RO groups for a number of preamble repetitions
210
212 PRACH transmission with the number of preamble repetitions
214

FIG. 2

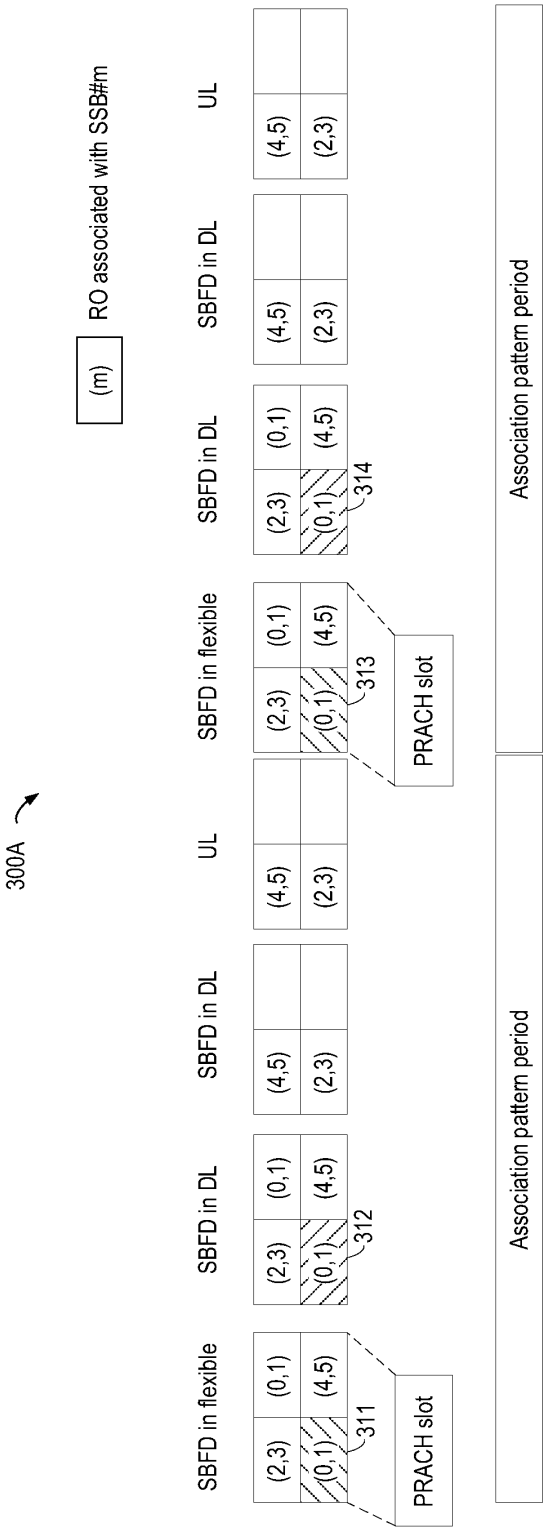
300A
(m)
RO associated with SSB#m
SBFD in flexible
SBFD in DL
UL
SBFD in flexible
SBFD in DL
UL
(2,3)
(0,1)
(4,5)
(2,3)
311
312
313
314
PRACH slot
Association pattern period

FIG. 3A

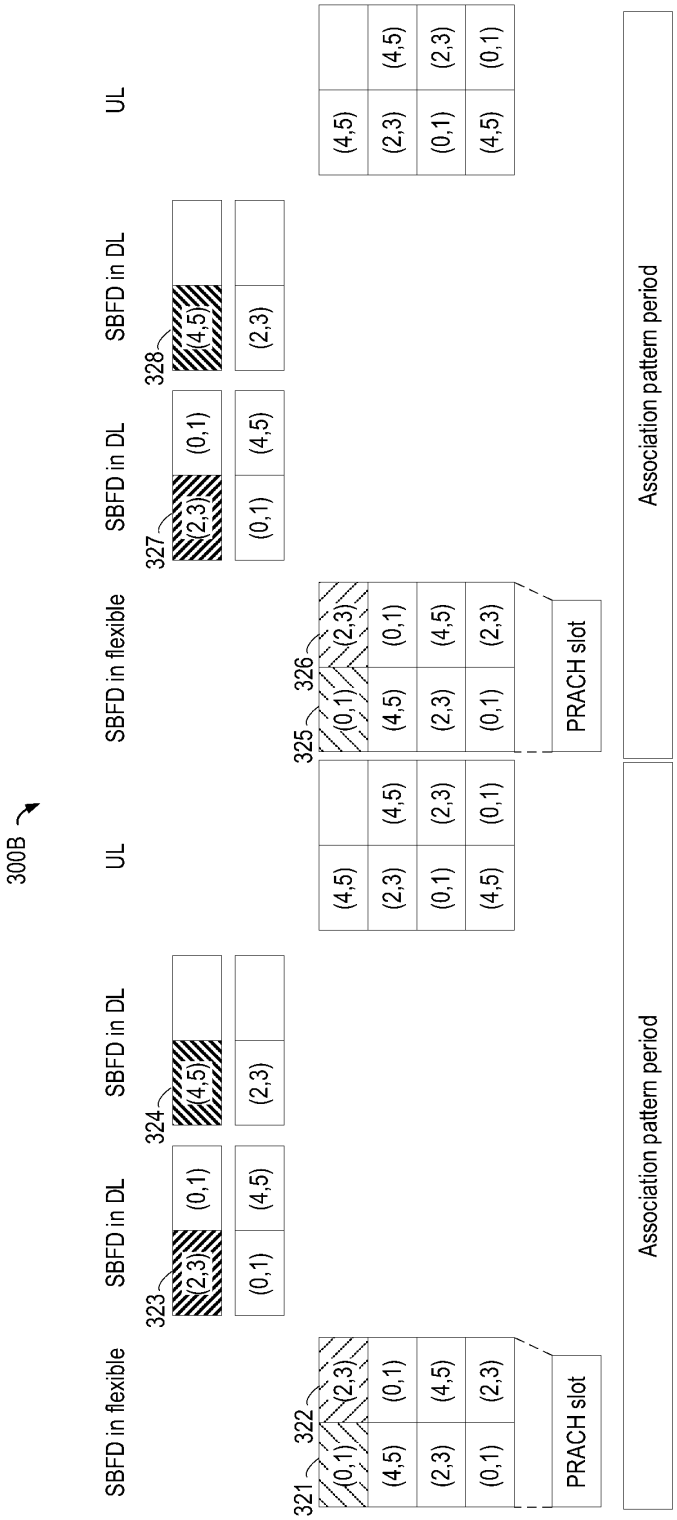
300B
SBFD in flexible
SBFD in DL
UL
SBFD in flexible
SBFD in DL
SBFD in DL
UL
321
322
323
324
325
326
327
328
(0,1)
(2,3)
(4,5)
(2,3)
(0,1)
(4,5)
(2,3)
(0,1)
(4,5)
(2,3)
(0,1)
(4,5)
PRACH slot
Association pattern period
Association pattern period

FIG. 3B

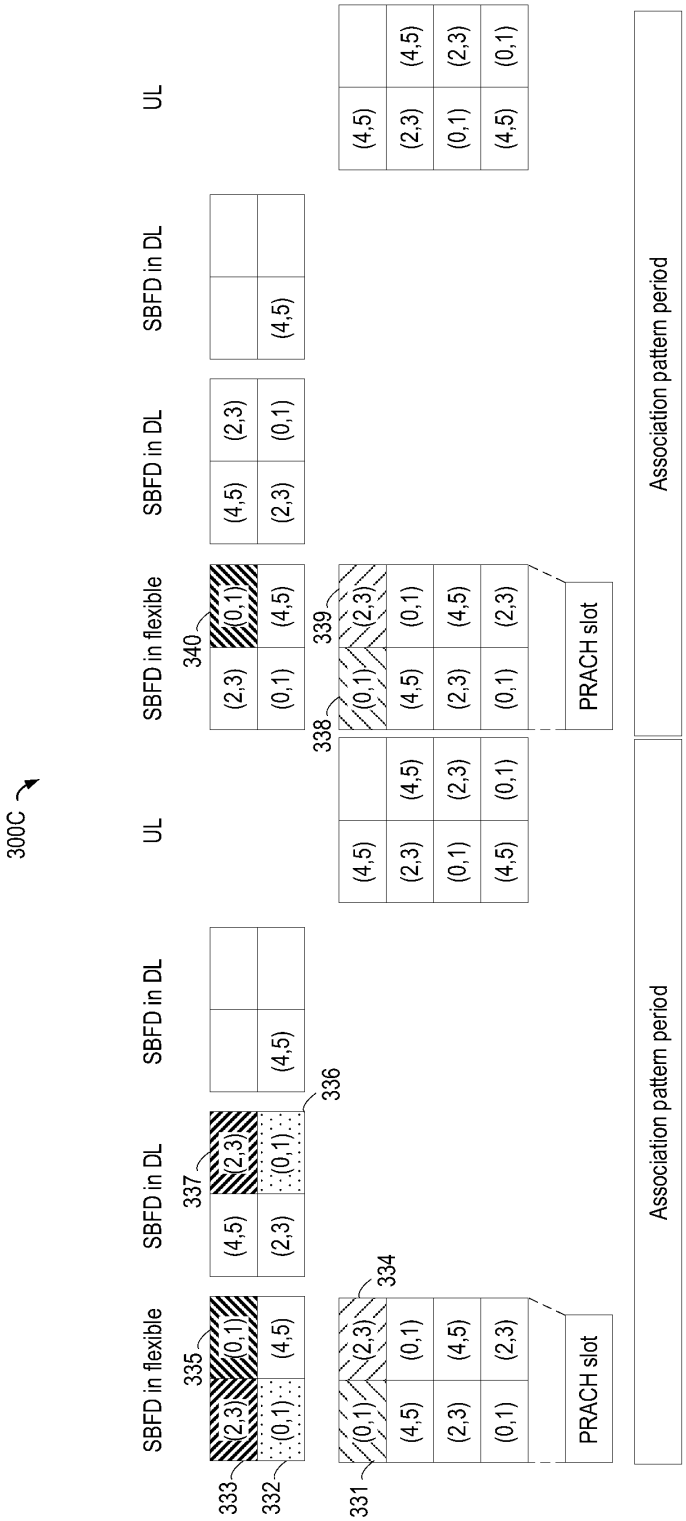
300C
SBFD in flexible
SBFD in DL
UL
SBFD in DL
UL
SBFD in flexible
SBFD in DL
UL
SBFD in DL
UL
333
332
335
337
336
331
334
338
339
340
PRACH slot
Association pattern period
Association pattern period

FIG. 3C

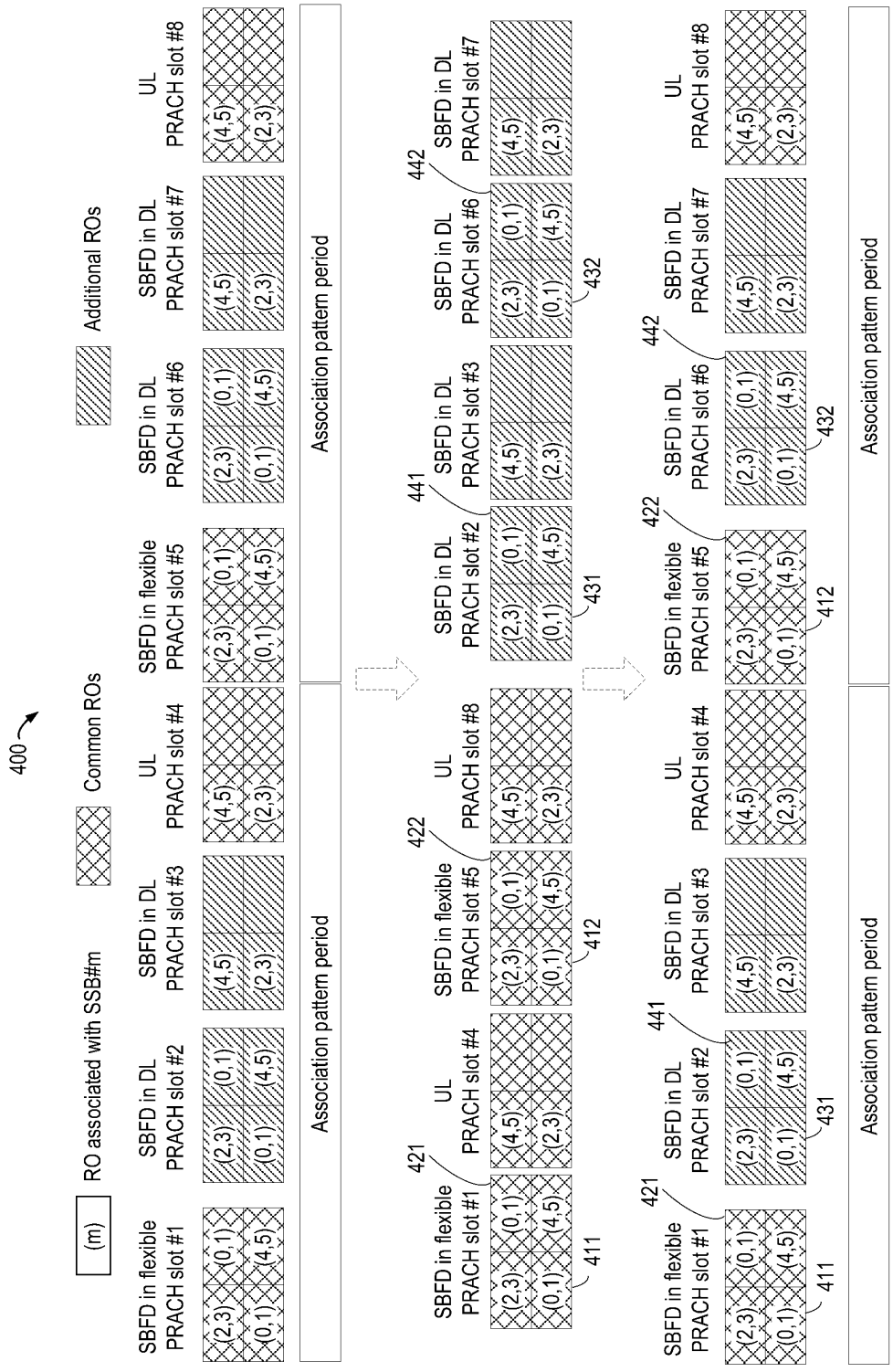
400
(m)
RO associated with SSB#m
Common ROs
Additional ROs
SBFD in flexible PRACH slot #1
SBFD in DL PRACH slot #2
SBFD in DL PRACH slot #3
UL PRACH slot #4
SBFD in flexible PRACH slot #5
SBFD in DL PRACH slot #6
SBFD in DL PRACH slot #7
UL PRACH slot #8
Association pattern period
411
412
421
422
431
432
441
442

FIG. 4

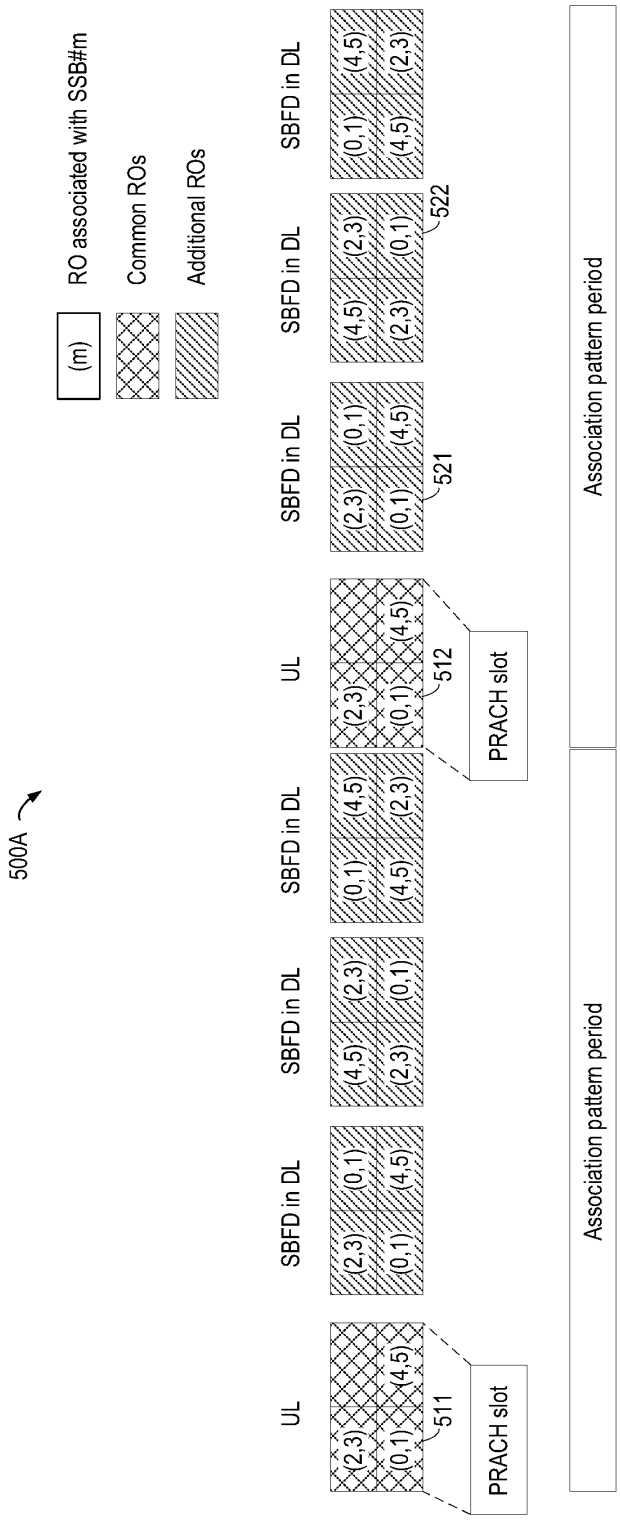
500A
(m)
RO associated with SSB#m
Common ROs
Additional ROs
UL
SBFD in DL
(2,3)
(0,1)
(4,5)
511
PRACH slot
512
521
522
Association pattern period

FIG. 5A

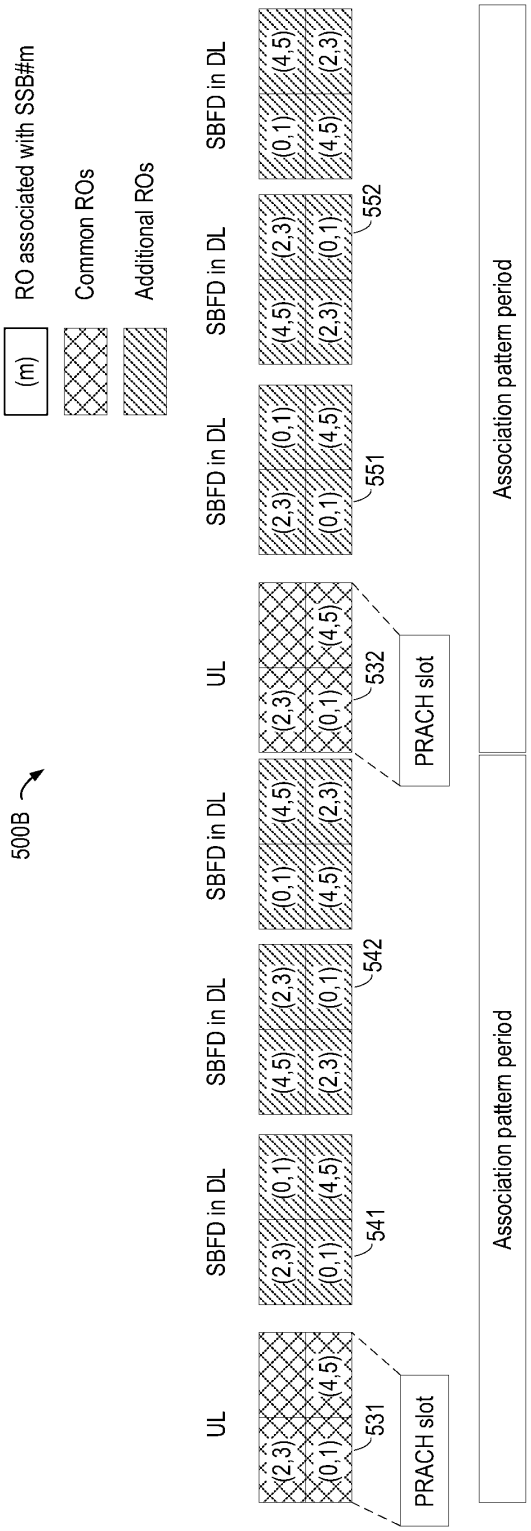
500B
(m)
RO associated with SSB#m
Common ROs
Additional ROs
UL
SBFD in DL
SBFD in DL
UL
SBFD in DL
SBFD in DL
(2,3) (0,1)
(0,1) (4,5)
531
PRACH slot
(4,5) (2,3)
(2,3) (0,1)
541
(2,3) (0,1)
(4,5) (2,3)
542
(0,1) (4,5)
(4,5) (2,3)
(2,3) (0,1)
532
PRACH slot
(2,3) (0,1)
(0,1) (4,5)
551
(4,5) (2,3)
(2,3) (0,1)
552
(0,1) (4,5)
(4,5) (2,3)
Association pattern period
Association pattern period

FIG. 5B

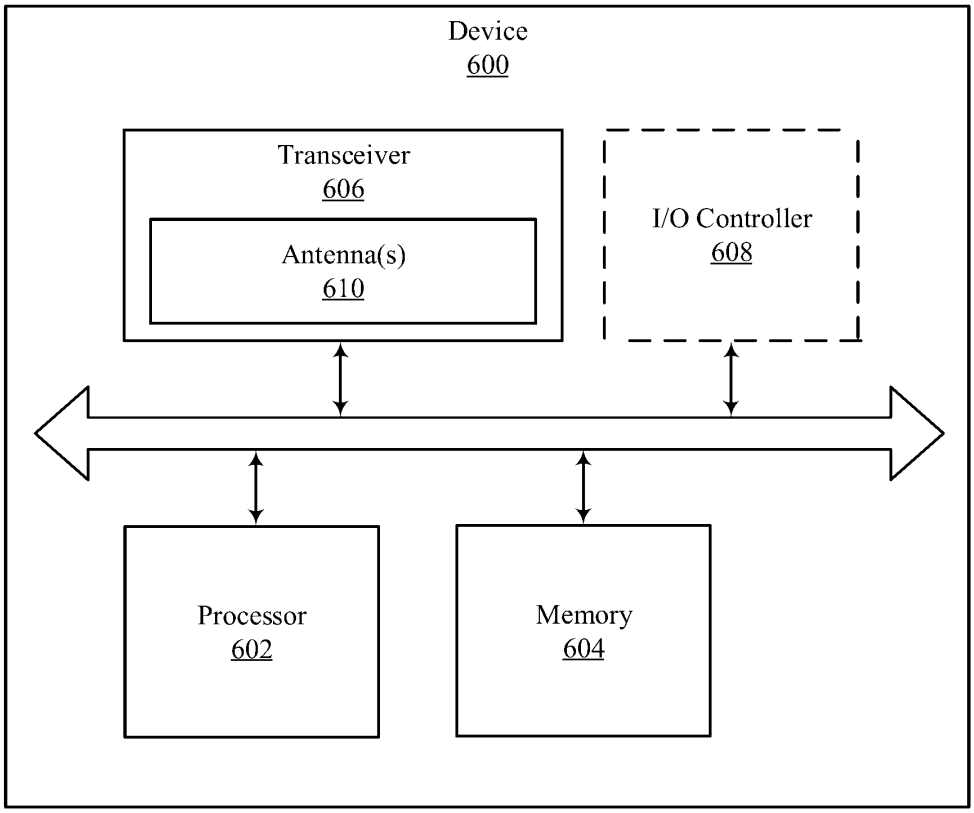
Device
600
Transceiver
606
Antenna(s)
610
I/O Controller
608
Processor
602
Memory
604

FIG. 6

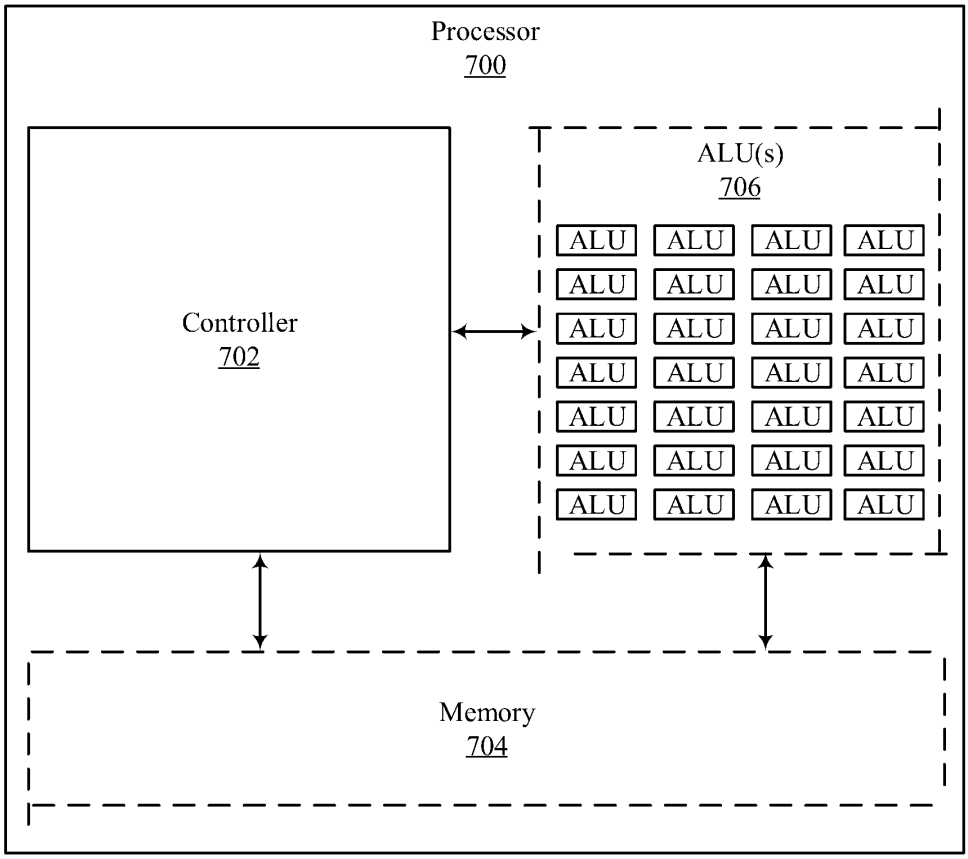

FIG. 7

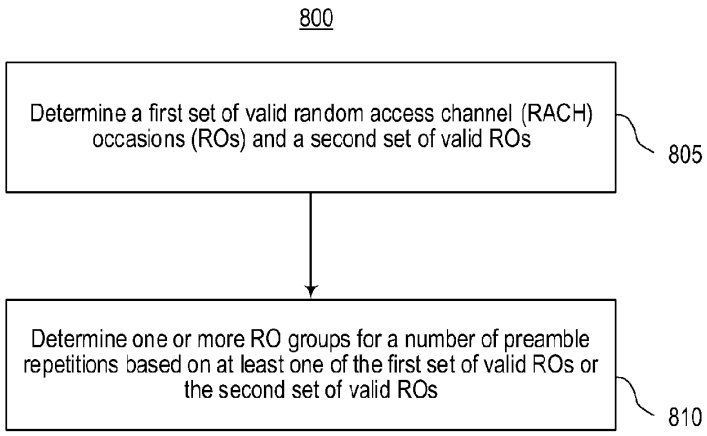
800
Determine a first set of valid random access channel (RACH) occasions (ROs) and a second set of valid ROs
805
Determine one or more RO groups for a number of preamble repetitions based on at least one of the first set of valid ROs or the second set of valid ROs
810

FIG. 8