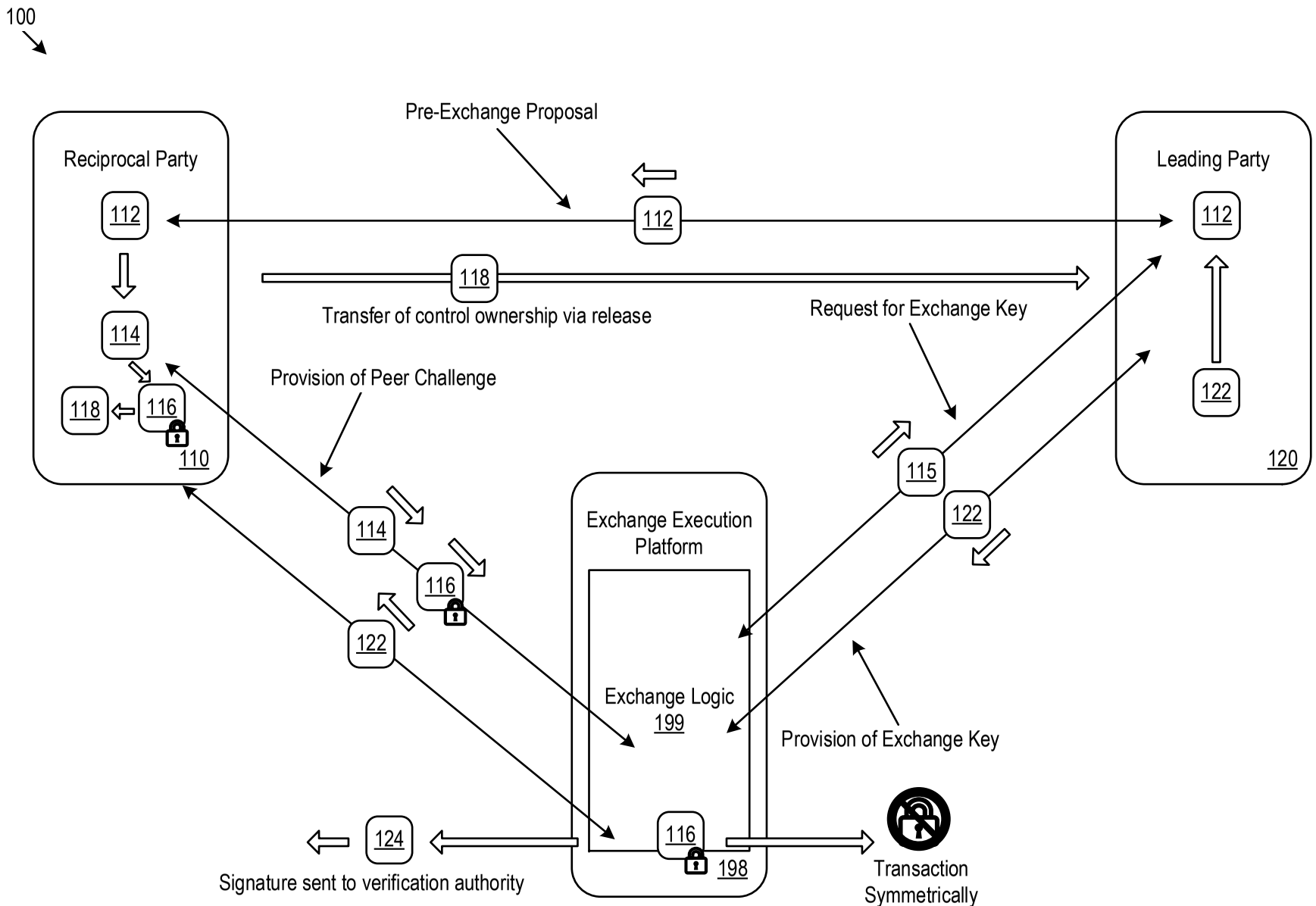
100
Reciprocal Party
112
114
118
116
110
Pre-Exchange Proposal
112
Leading Party
112
122
120
118
Transfer of control ownership via release
Request for Exchange Key
Provision of Peer Challenge
114
116
122
115
122
Exchange Execution Platform
Exchange Logic
199
116
198
Provision of Exchange Key
124
Signature sent to verification authority
Transaction Symmetrically Released

Figure 1

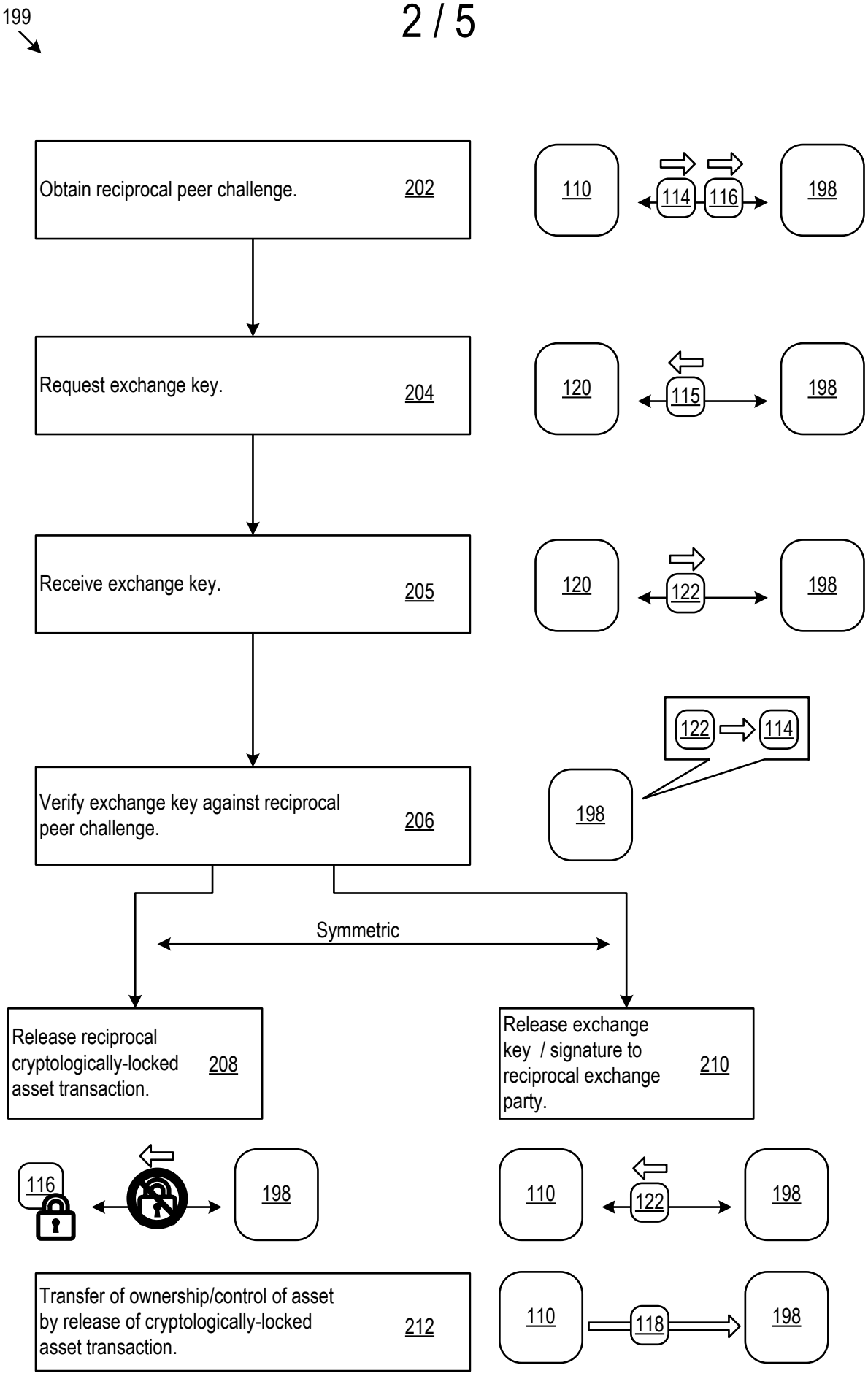
199
Obtain reciprocal peer challenge. 202
110
114
116
198
Request exchange key. 204
120
115
198
Receive exchange key. 205
120
122
198
122
114
198
Verify exchange key against reciprocal peer challenge. 206
Symmetric
Release reciprocal cryptologically-locked asset transaction. 208
Release exchange key / signature to reciprocal exchange party. 210
116
198
110
122
198
Transfer of ownership/control of asset by release of cryptologically-locked asset transaction. 212
110
118
198

Figure 2

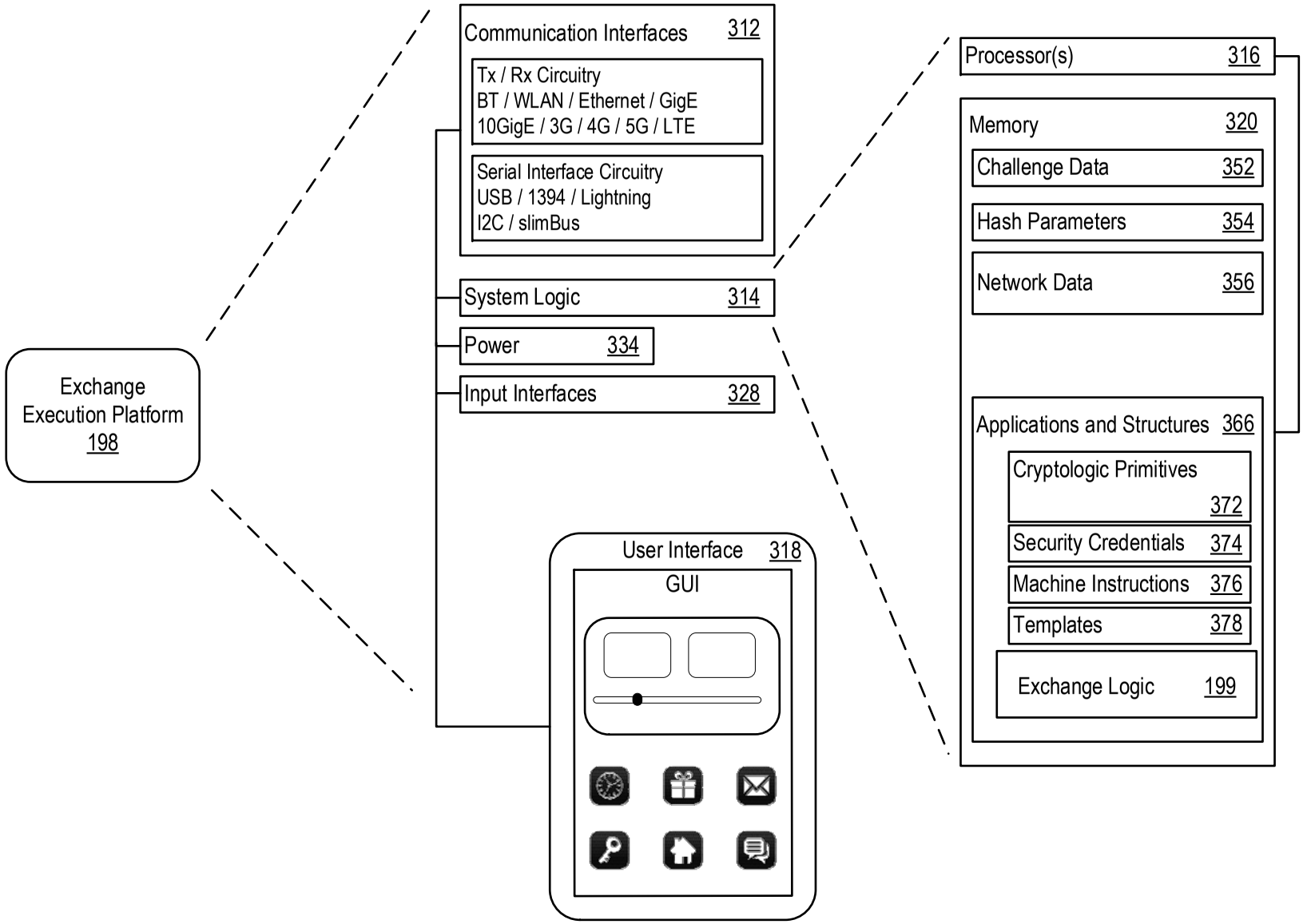
Exchange Execution Platform 198
Communication Interfaces 312
Tx / Rx Circuitry
BT / WLAN / Ethernet / GigE
10GigE / 3G / 4G / 5G / LTE
Serial Interface Circuitry
USB / 1394 / Lightning
I2C / slimBus
System Logic 314
Power 334
Input Interfaces 328
User Interface 318
GUI
Processor(s) 316
Memory 320
Challenge Data 352
Hash Parameters 354
Network Data 356
Applications and Structures 366
Cryptologic Primitives 372
Security Credentials 374
Machine Instructions 376
Templates 378
Exchange Logic 199

Figure 3

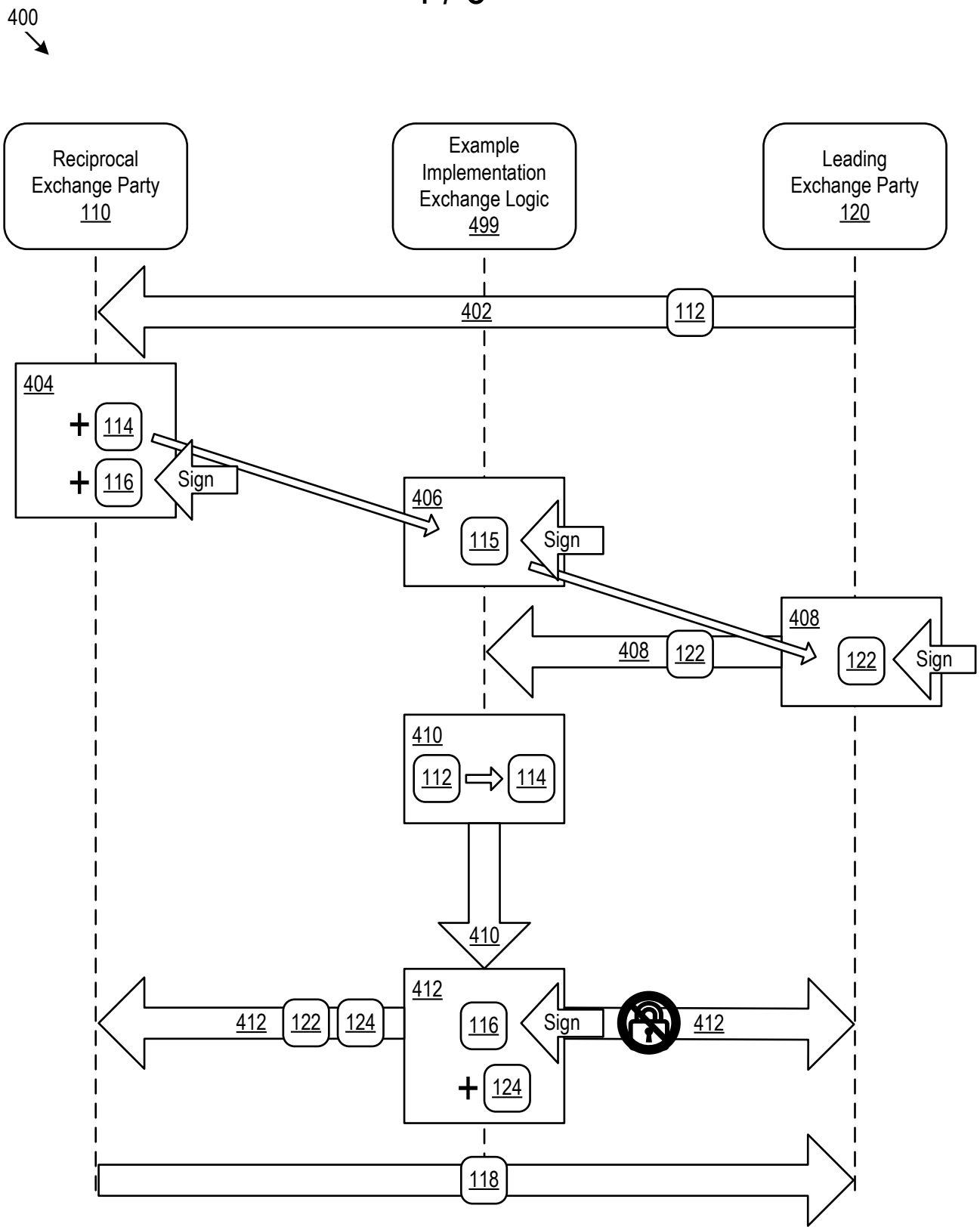
400
Reciprocal Exchange Party 110
Example Implementation Exchange Logic 499
Leading Exchange Party 120
402
112
404
114
116
Sign
406
115
Sign
408
122
408
122
Sign
410
112
114
410
412
412
122
124
116
Sign
412
124
118

Figure 4

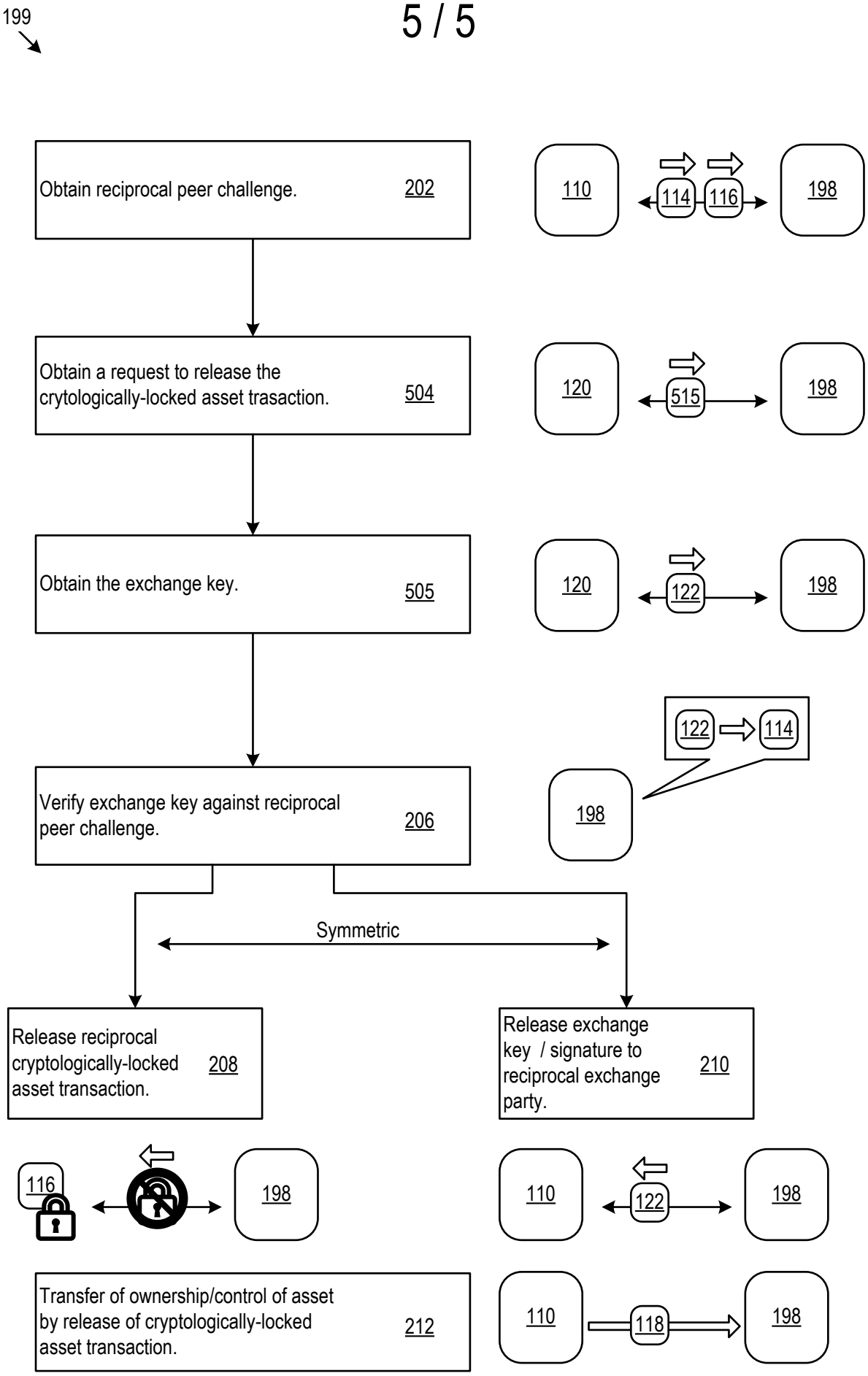
199
Obtain reciprocal peer challenge.
202
110
114
116
198
Obtain a request to release the crytologically-locked asset trasaction.
504
120
515
198
Obtain the exchange key.
505
120
122
198
122
114
198
Verify exchange key against reciprocal peer challenge.
206
Symmetric
Release reciprocal cryptologically-locked asset transaction.
208
Release exchange key / signature to reciprocal exchange party.
210
116
198
110
122
198
Transfer of ownership/control of asset by release of cryptologically-locked asset transaction.
212
110
118
198

Figure 5