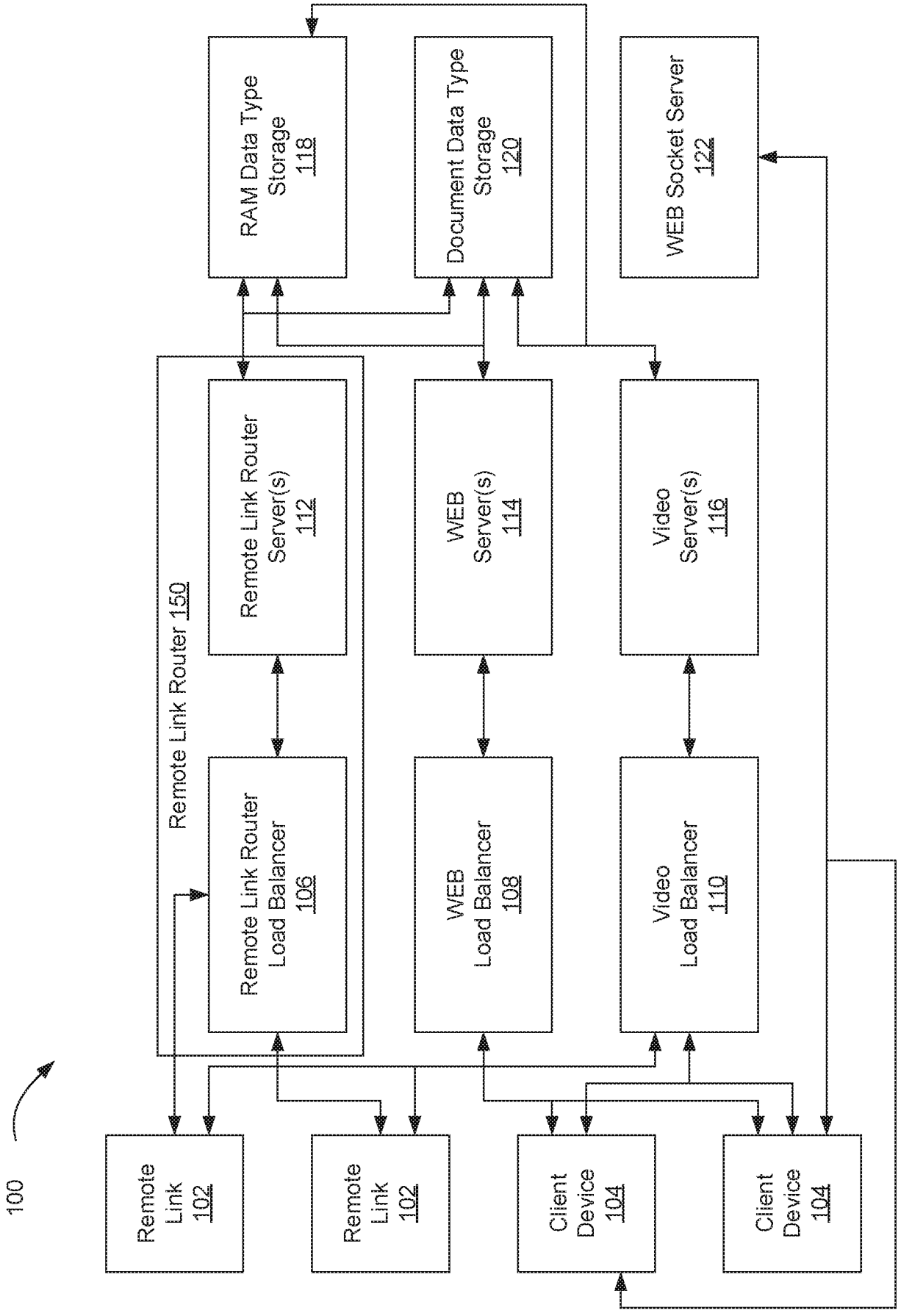
100
Remote Link 102
Remote Link 102
Client Device 104
Client Device 104
Remote Link Router 150
Remote Link Router Load Balancer 106
Remote Link Router Server(s) 112
WEB Load Balancer 108
WEB Server(s) 114
Video Load Balancer 110
Video Server(s) 116
RAM Data Type Storage 118
Document Data Type Storage 120
WEB Socket Server 122

FIG. 1

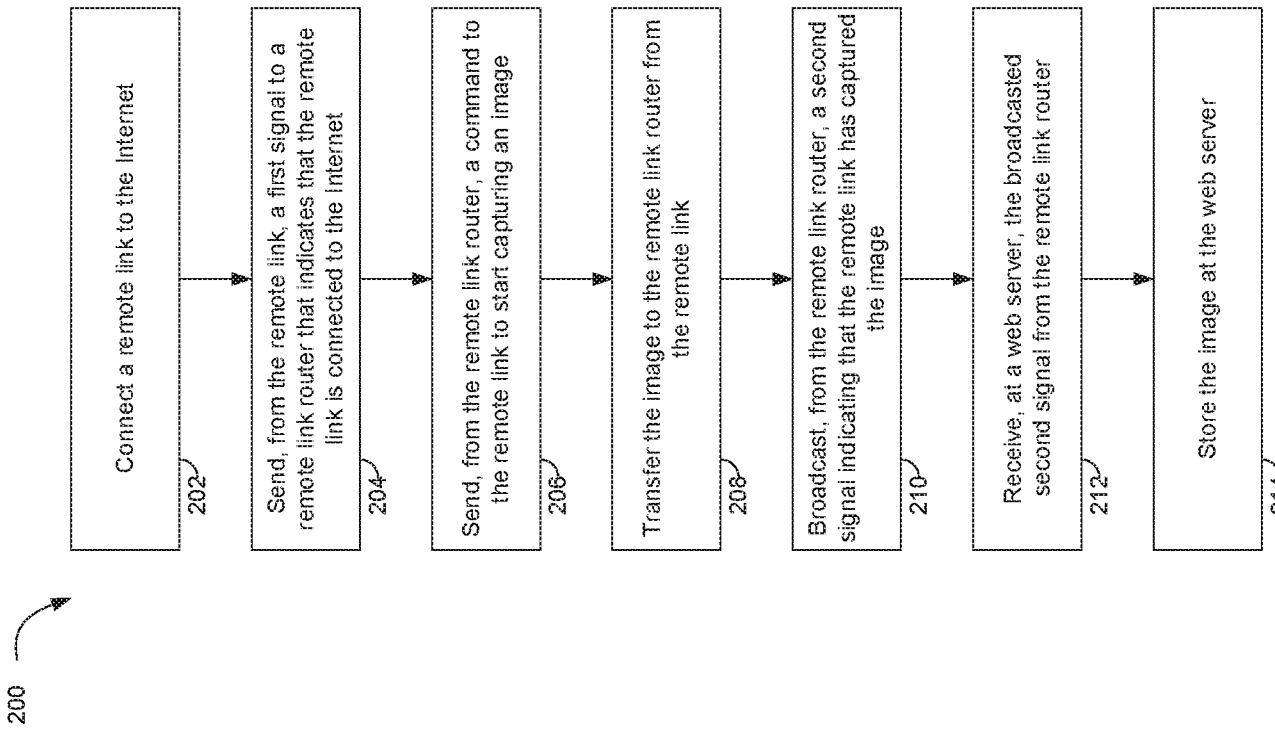
200
Connect a remote link to the Internet
202
Send, from the remote link, a first signal to a remote link router that indicates that the remote link is connected to the Internet
204
Send, from the remote link router, a command to the remote link to start capturing an image
206
Transfer the image to the remote link router from the remote link
208
Broadcast, from the remote link router, a second signal indicating that the remote link has captured the image
210
Receive, at a web server, the broadcasted second signal from the remote link router
212
Store the image at the web server
214

FIG. 2

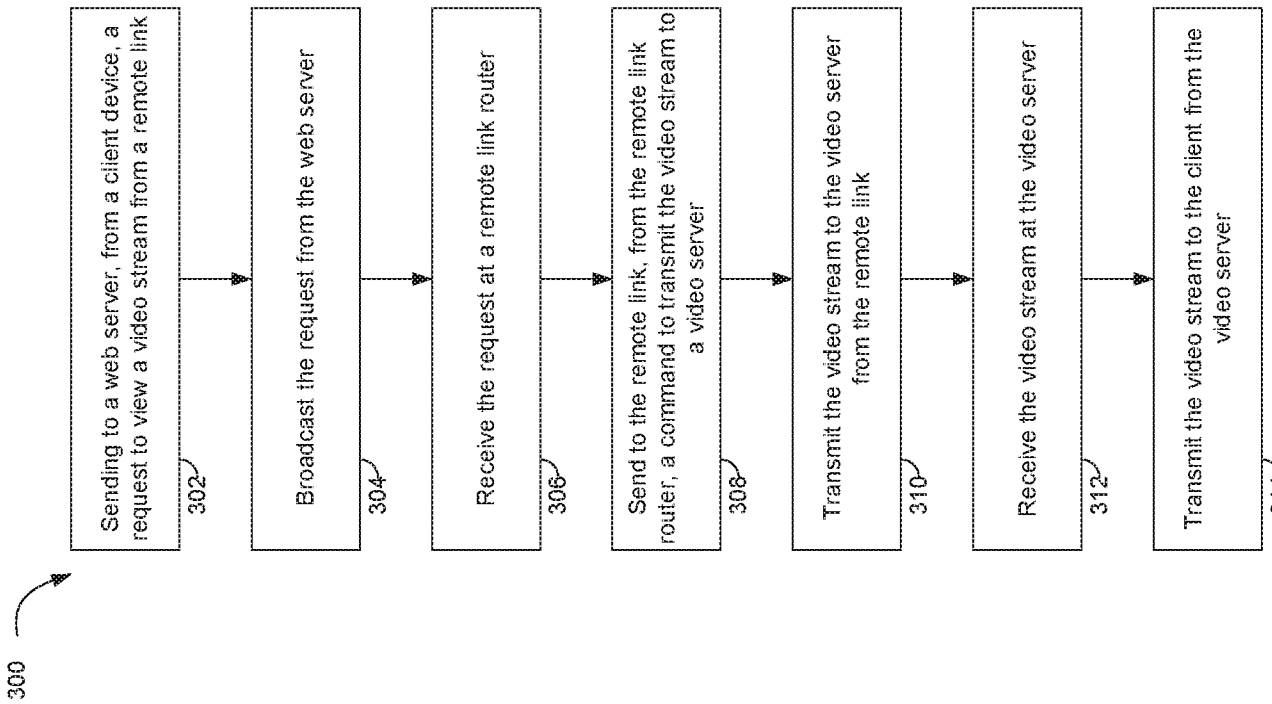
300
Sending to a web server, from a client device, a request to view a video stream from a remote link
302
Broadcast the request from the web server
304
Receive the request at a remote link router
306
Send to the remote link, from the remote link router, a command to transmit the video stream to a video server
308
Transmit the video stream to the video server from the remote link
310
Receive the video stream at the video server
312
Transmit the video stream to the client from the video server
314

FIG. 3

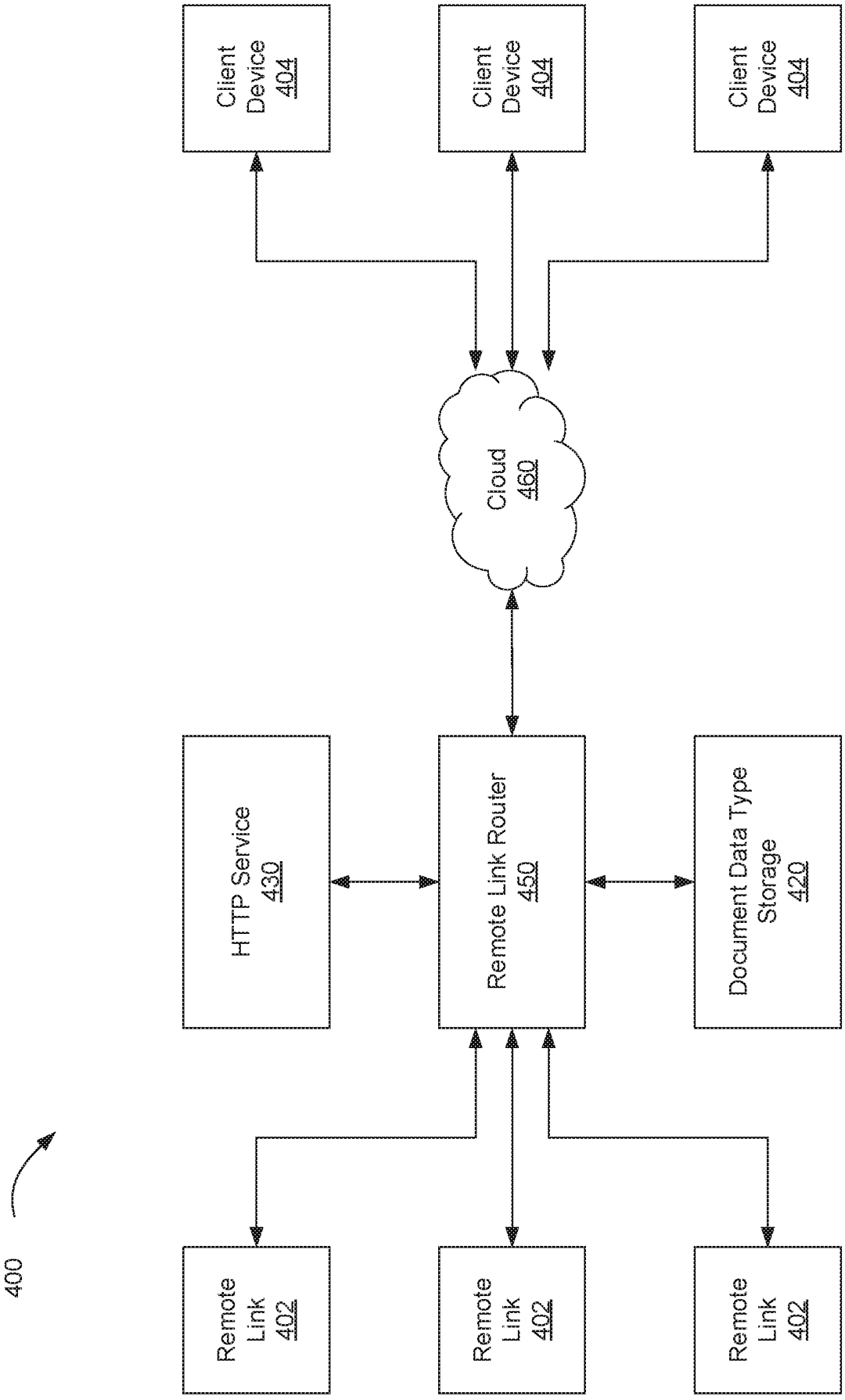
400
Client Device 404
Client Device 404
Client Device 404
Cloud 460
HTTP Service 430
Remote Link Router 450
Document Data Type Storage 420
Remote Link 402
Remote Link 402
Remote Link 402

FIG. 4

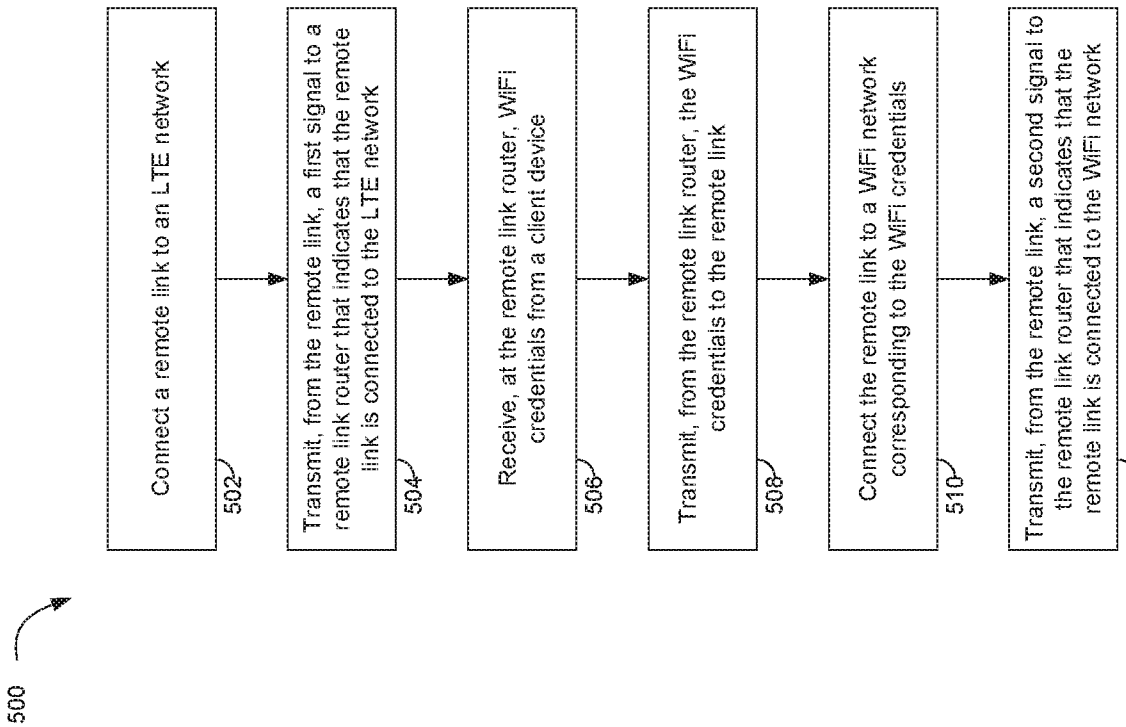
500
Connect a remote link to an LTE network
502
Transmit, from the remote link, a first signal to a remote link router that indicates that the remote link is connected to the LTE network
504
Receive, at the remote link router, WiFi credentials from a client device
506
Transmit, from the remote link router, the WiFi credentials to the remote link
508
Connect the remote link to a WiFi network corresponding to the WiFi credentials
510
Transmit, from the remote link, a second signal to the remote link router that indicates that the remote link is connected to the WiFi network
512

FIG. 5

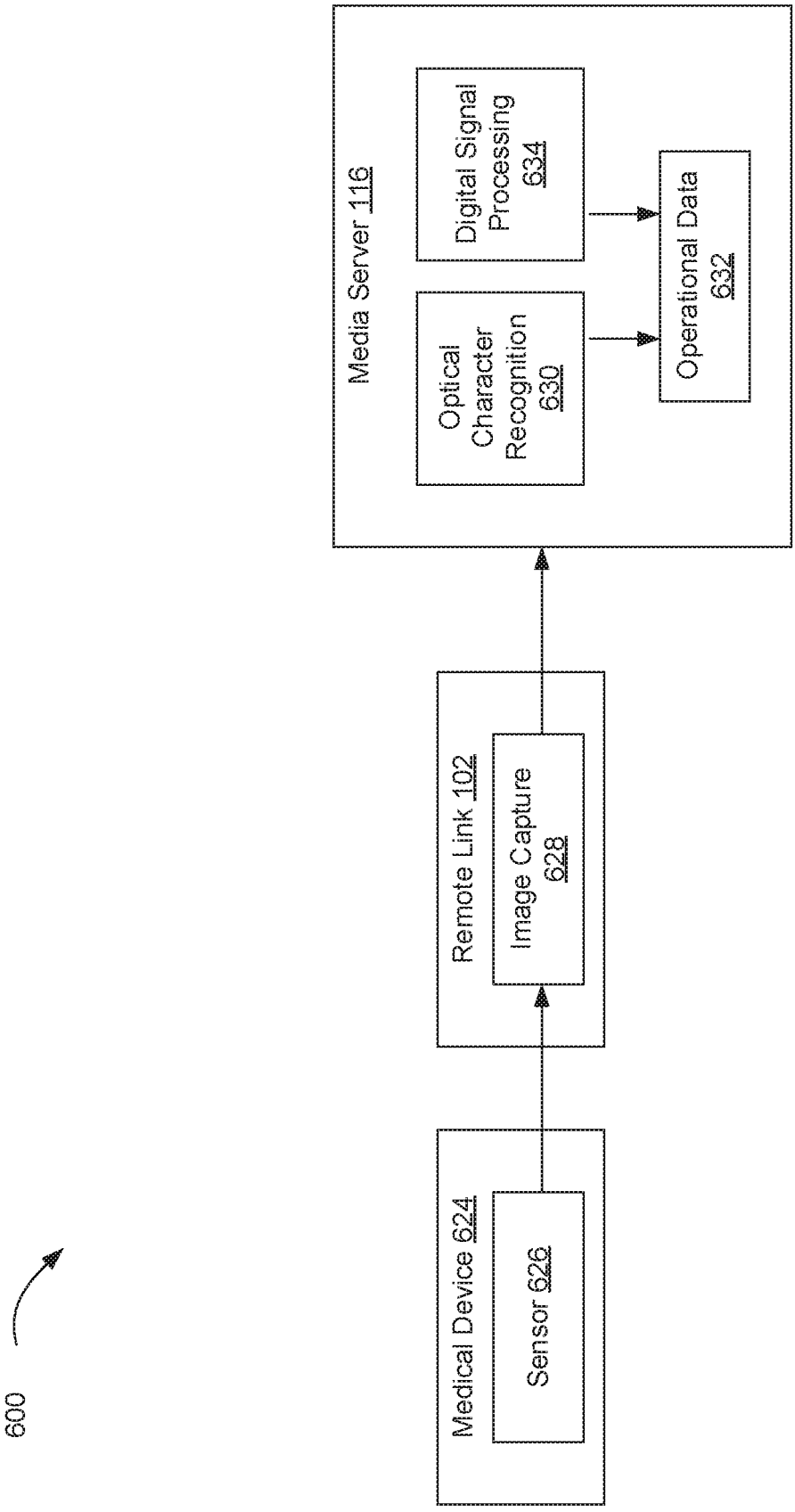
600
Medical Device 624
Sensor 626
Remote Link 102
Image Capture 628
Media Server 116
Optical Character Recognition 630
Digital Signal Processing 634
Operational Data 632

FIG. 6

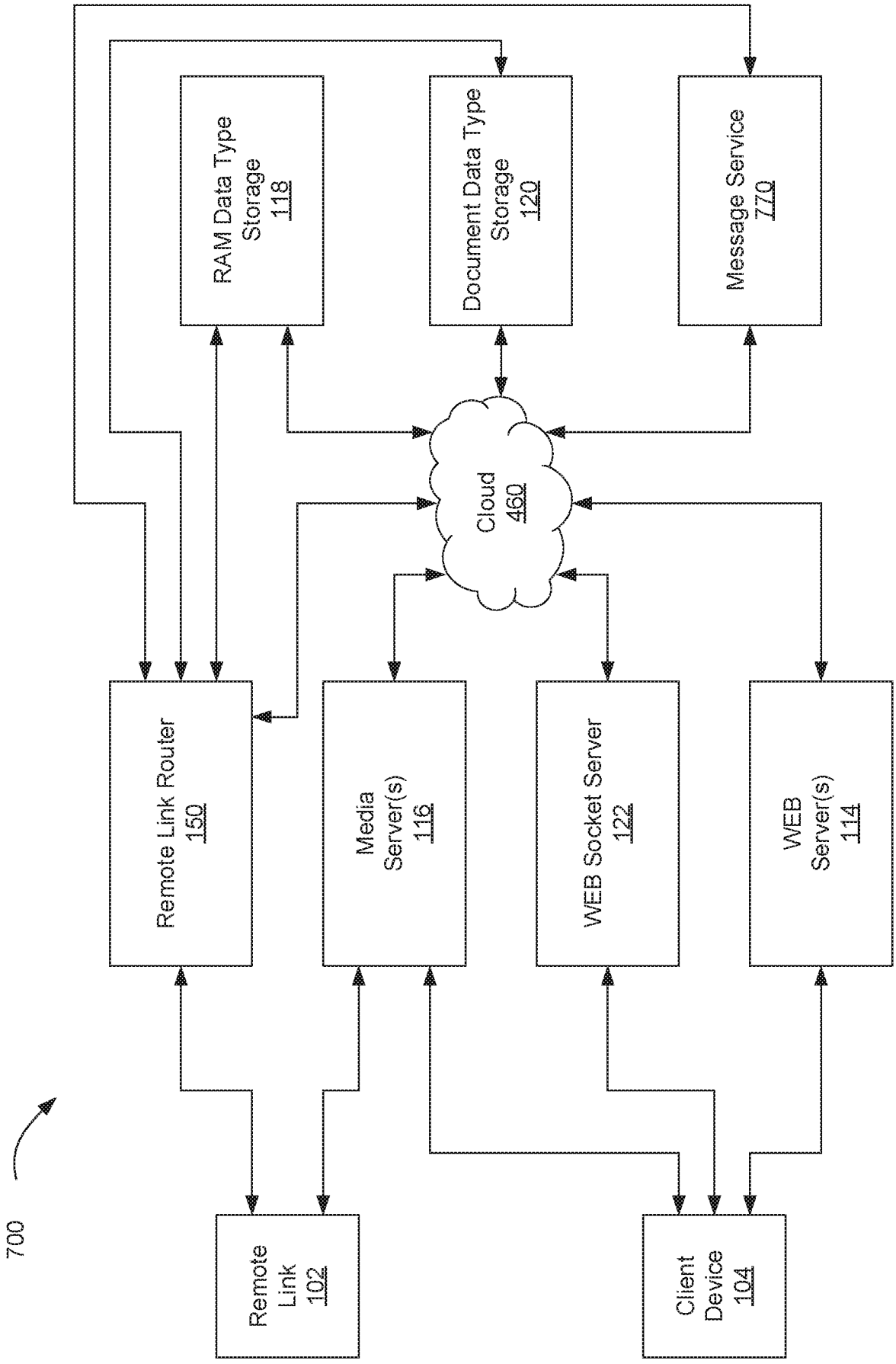
700
Remote Link 102
Client Device 104
Remote Link Router 150
Media Server(s) 116
WEB Socket Server 122
WEB Server(s) 114
Cloud 460
RAM Data Type Storage 118
Document Data Type Storage 120
Message Service 770

FIG. 7

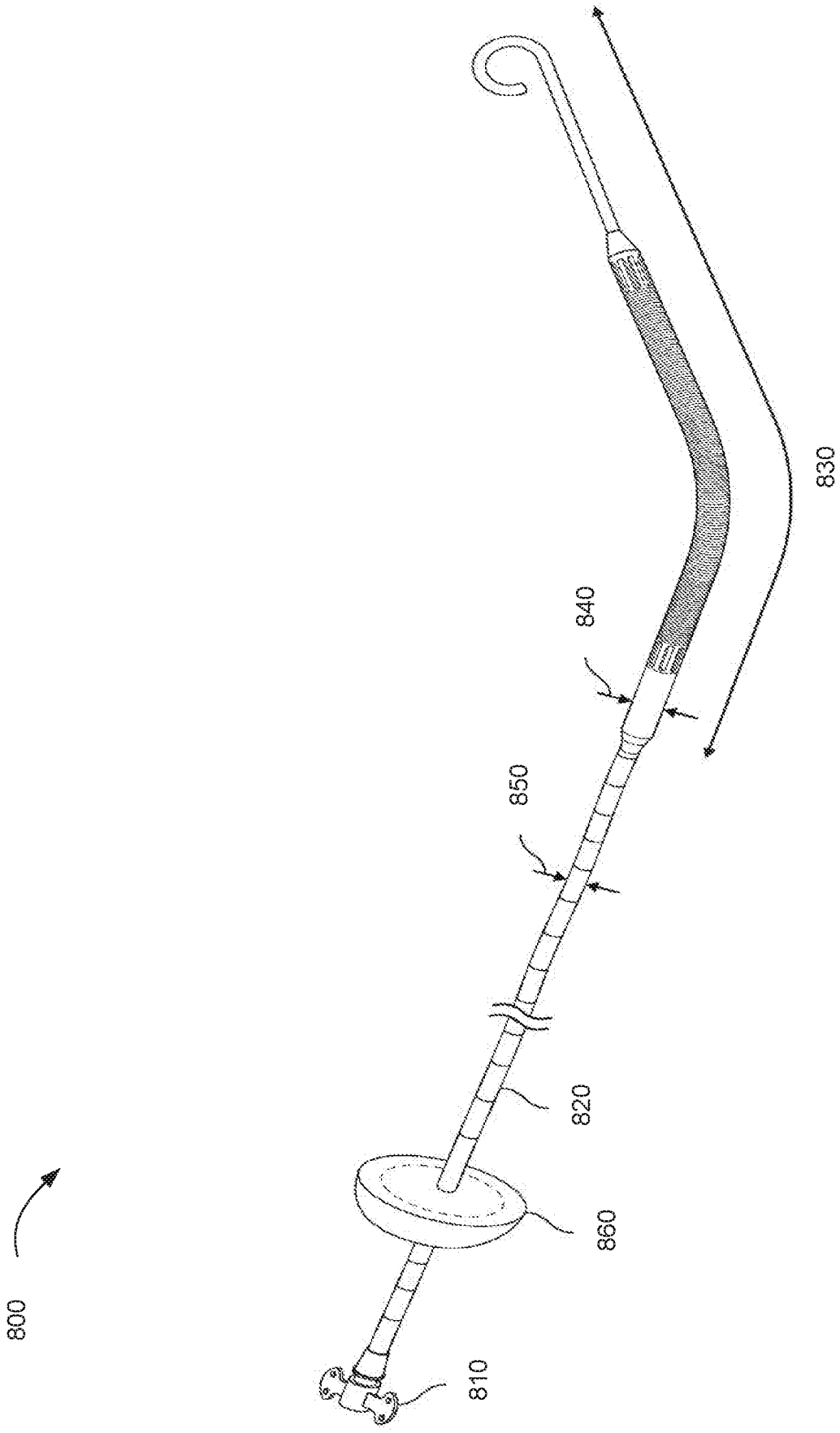

FIG. 8

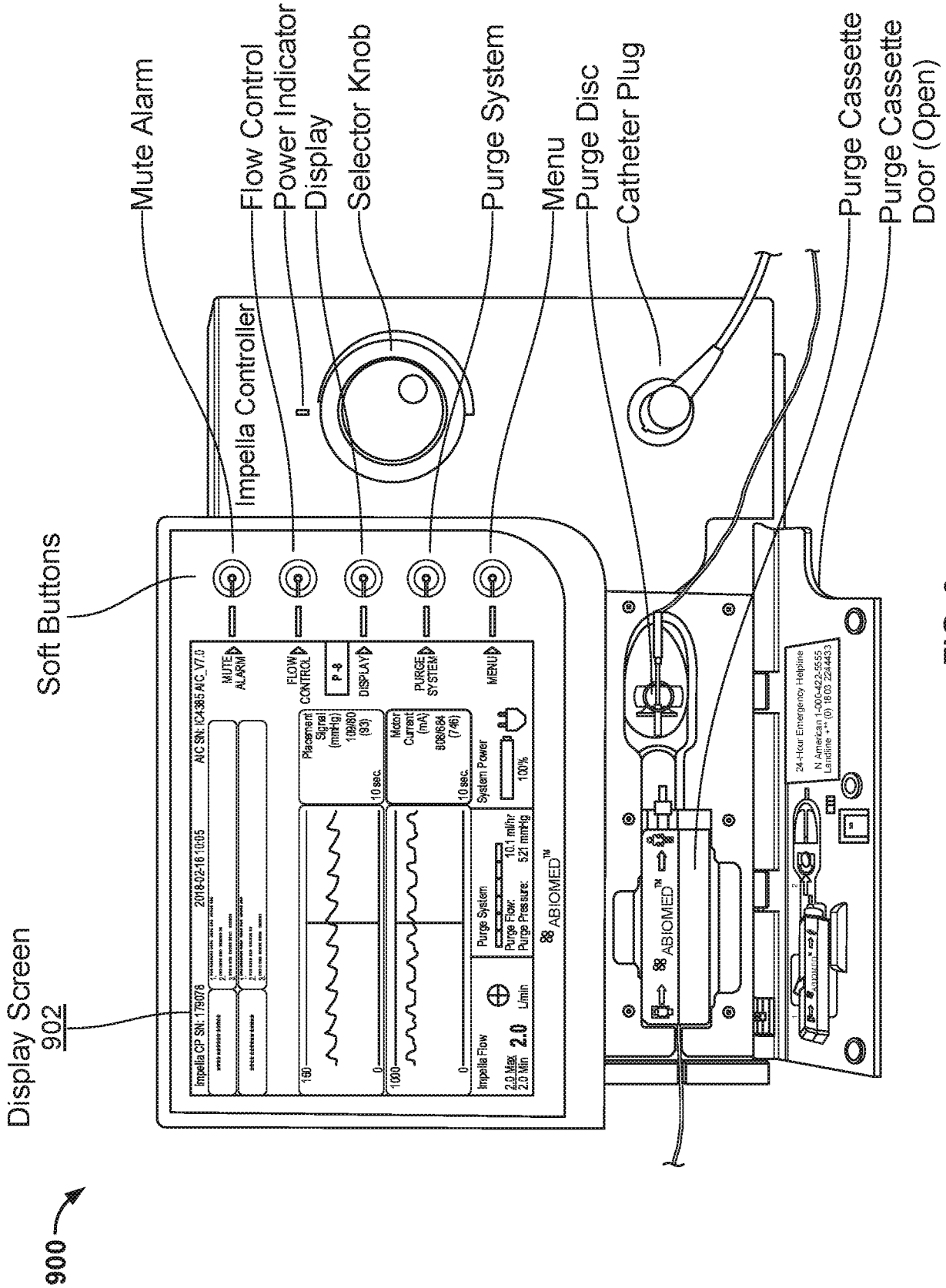
900
Display Screen
902
Soft Buttons
Mute Alarm
Impella Controller
Flow Control
Power Indicator
Display
Selector Knob
Purge System
Menu
Purge Disc
Catheter Plug
Purge Cassette
Purge Cassette Door (Open)
MUTE ALARM
FLOW CONTROL
DISPLAY
PURGE SYSTEM
MENU
ABIOMED
24-Hour Emergency Helpline

FIG. 9

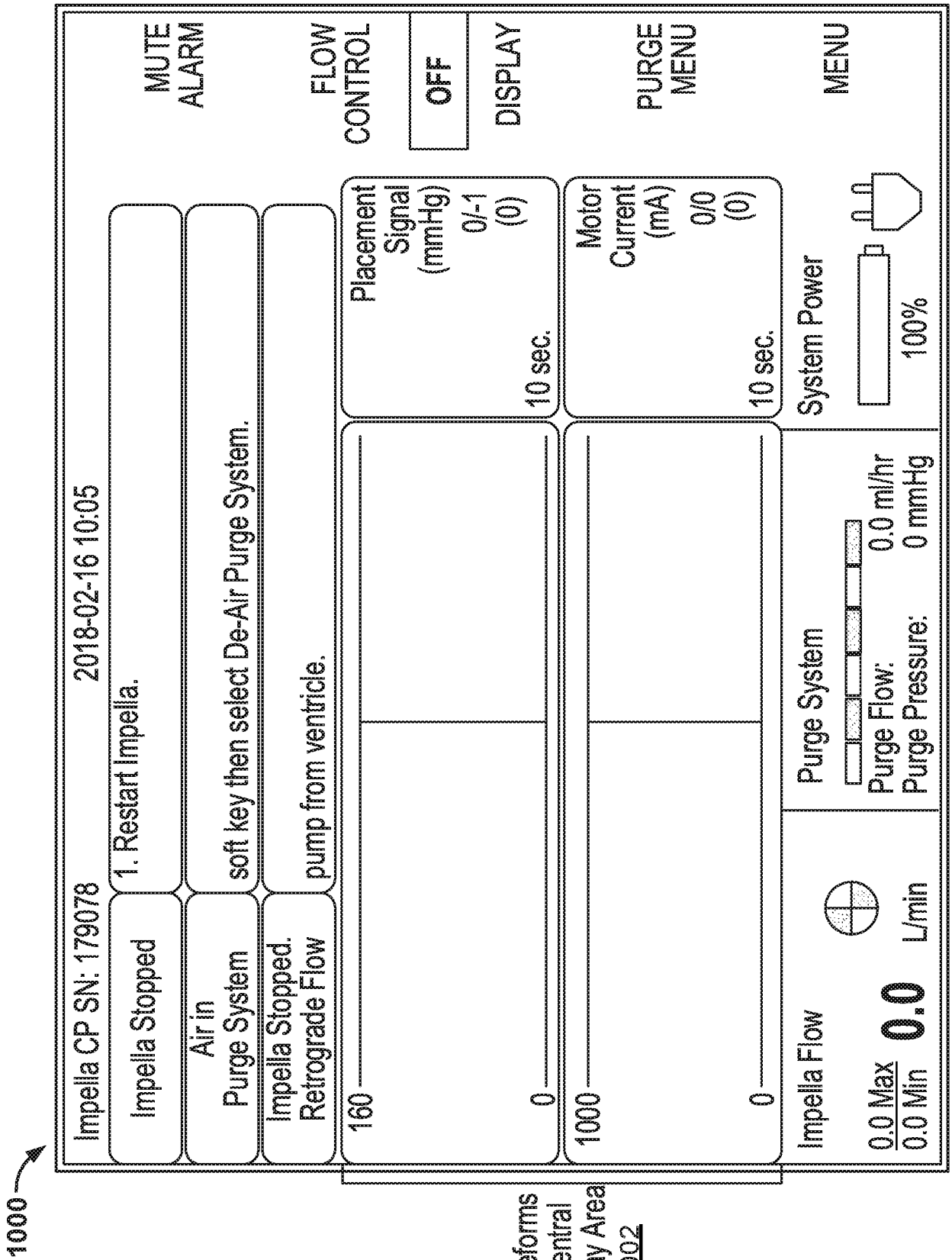
1000
Impella CP SN: 179078
2018-02-16 10:05
MUTE ALARM
Impella Stopped
1. Restart Impella.
Air in Purge System
soft key then select De-Air Purge System.
Impella Stopped. Retrograde Flow
pump from ventricle.
FLOW CONTROL
OFF
DISPLAY
Placement Signal (mmHg) 0/-1 (0)
10 sec.
160
0
Motor Current (mA) 0/0 (0)
10 sec.
1000
0
PURGE MENU
System Power
100%
MENU
Purge System
Purge Flow: 0.0 ml/hr
Purge Pressure: 0 mmHg
Impella Flow
0.0 Max
0.0 Min
0.0
L/min
Waveforms in Central Display Area 1002

FIG. 10

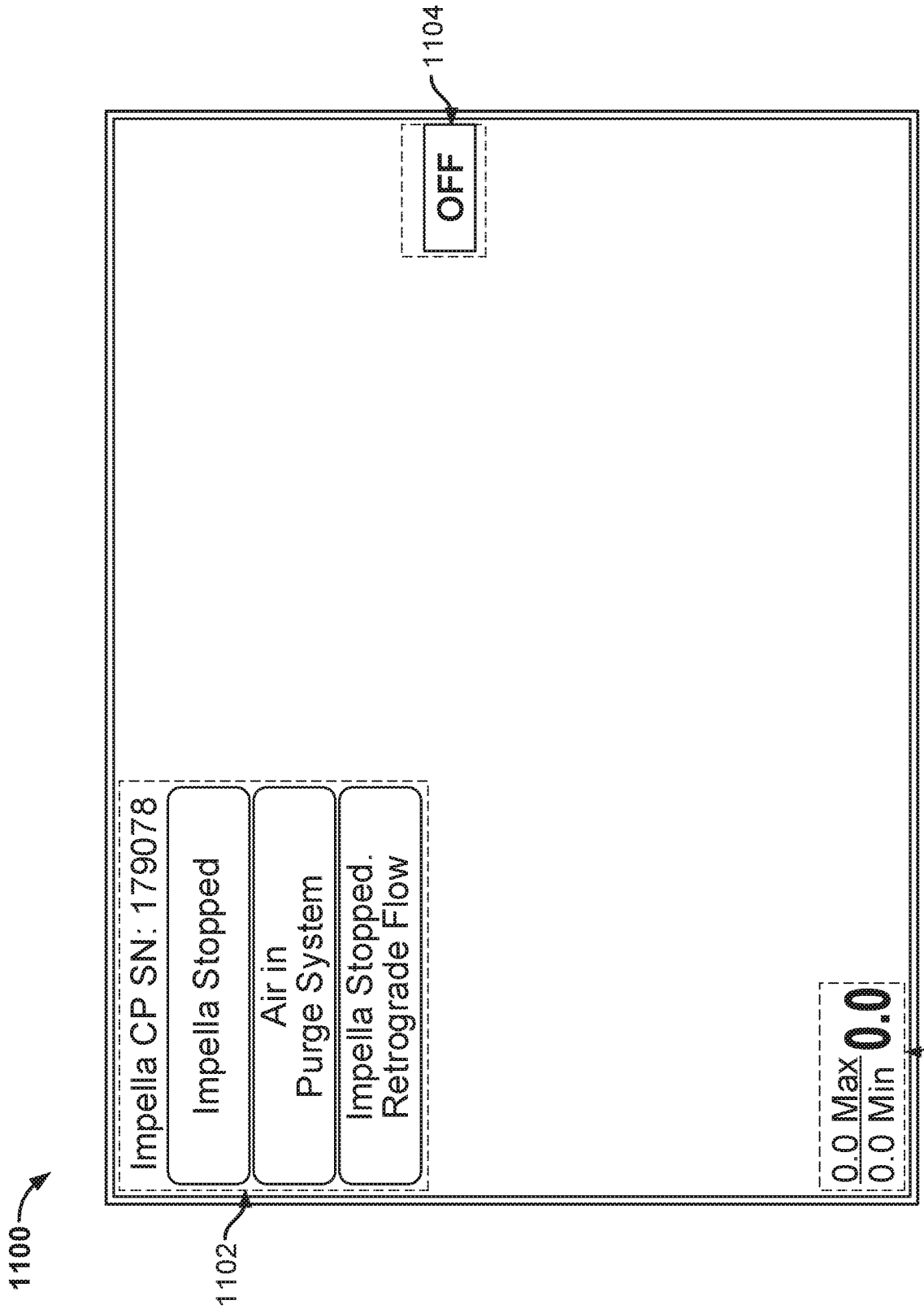
1100
1102
Impella CP SN: 179078
Impella Stopped
Air in
Purge System
Impella Stopped.
Retrograde Flow
1104
OFF
0.0 Max
0.0 Min
0.0
1106

FIG. 11

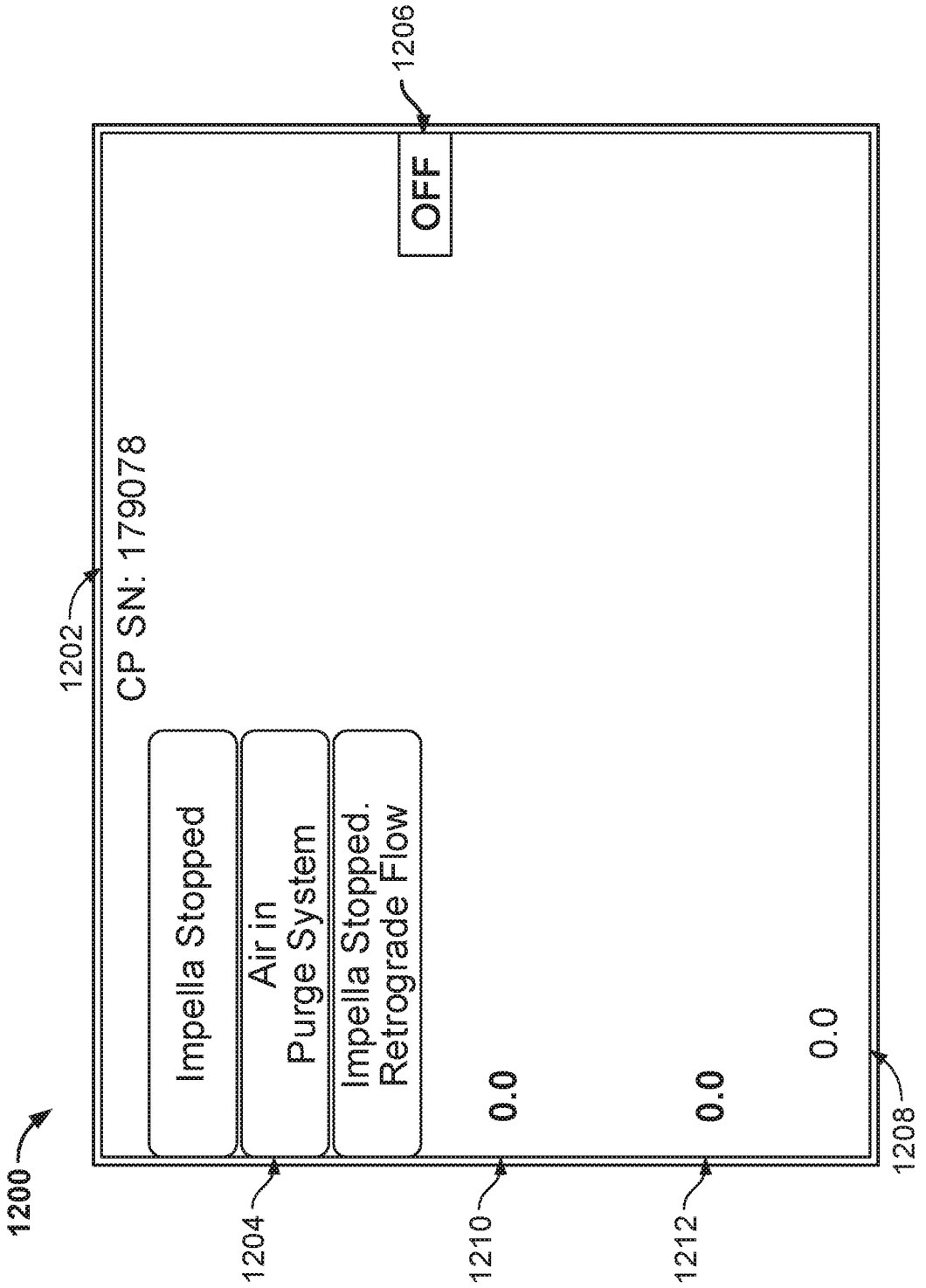
1200
1202
CP SN: 179078
1206
OFF
Impella Stopped
Air in
Purge System
Impella Stopped.
Retrograde Flow
0.0
0.0
0.0
1204
1210
1212
1208

FIG. 12

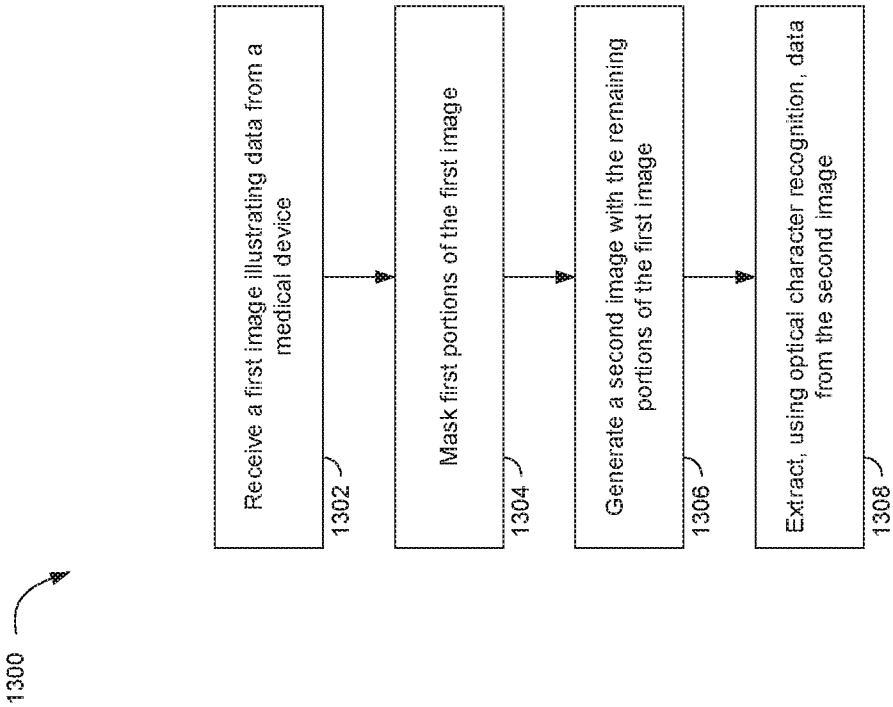
1300
Receive a first image illustrating data from a medical device
1302
Mask first portions of the first image
1304
Generate a second image with the remaining portions of the first image
1306
Extract, using optical character recognition, data from the second image
1308

FIG. 13

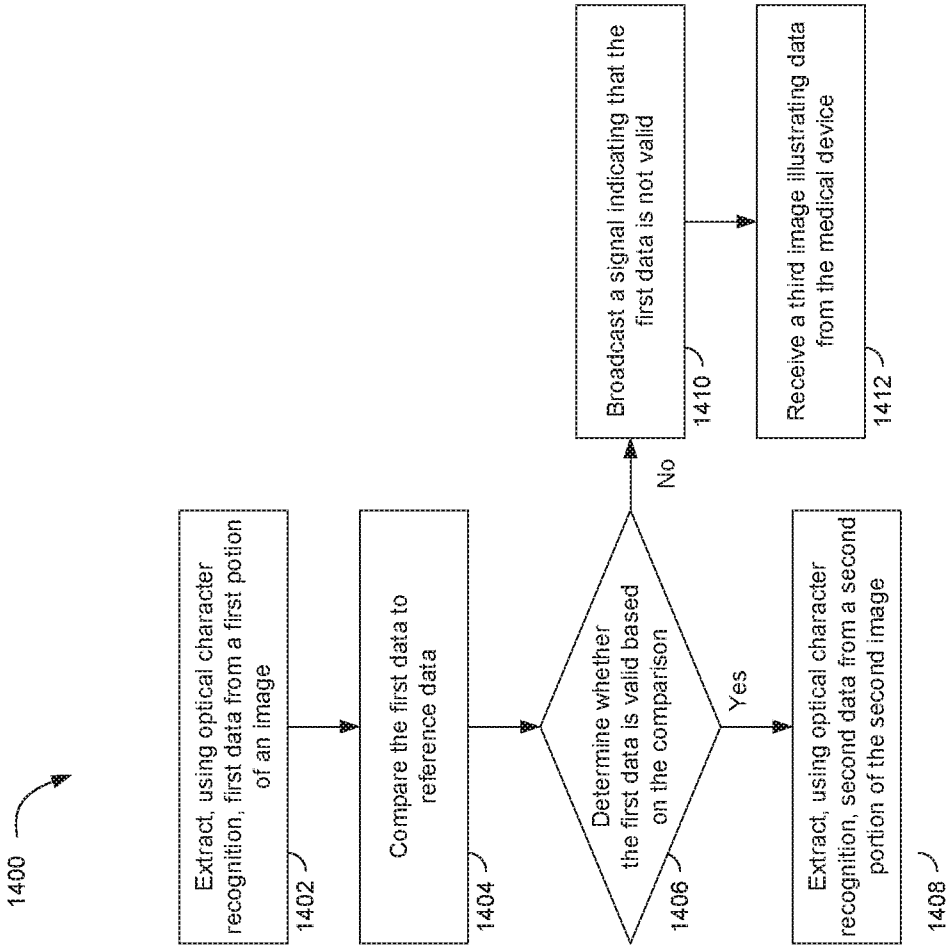
1400
Extract, using optical character recognition, first data from a first potion of an image
1402
Compare the first data to reference data
1404
Determine whether the first data is valid based on the comparison
1406
No
Yes
Broadcast a signal indicating that the first data is not valid
1410
Receive a third image illustrating data from the medical device
1412
Extract, using optical character recognition, second data from a second portion of the second image
1408

FIG. 14