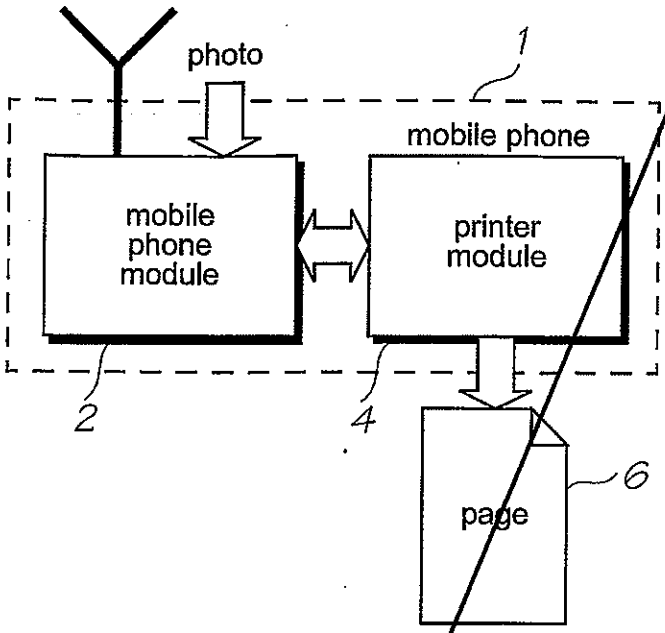
photo
1
mobile phone
mobile phone module
printer module
2
4
page
6

FIG. 1

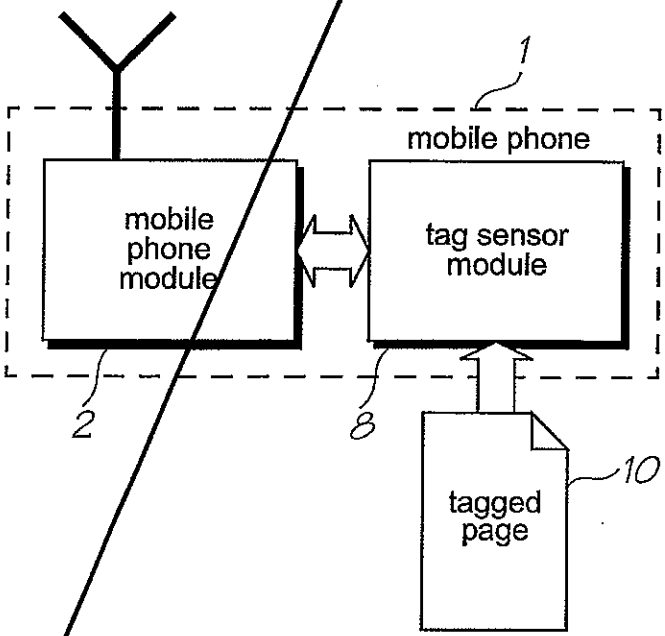
1
mobile phone
mobile phone module
tag sensor module
2
8
tagged page
10

FIG. 2

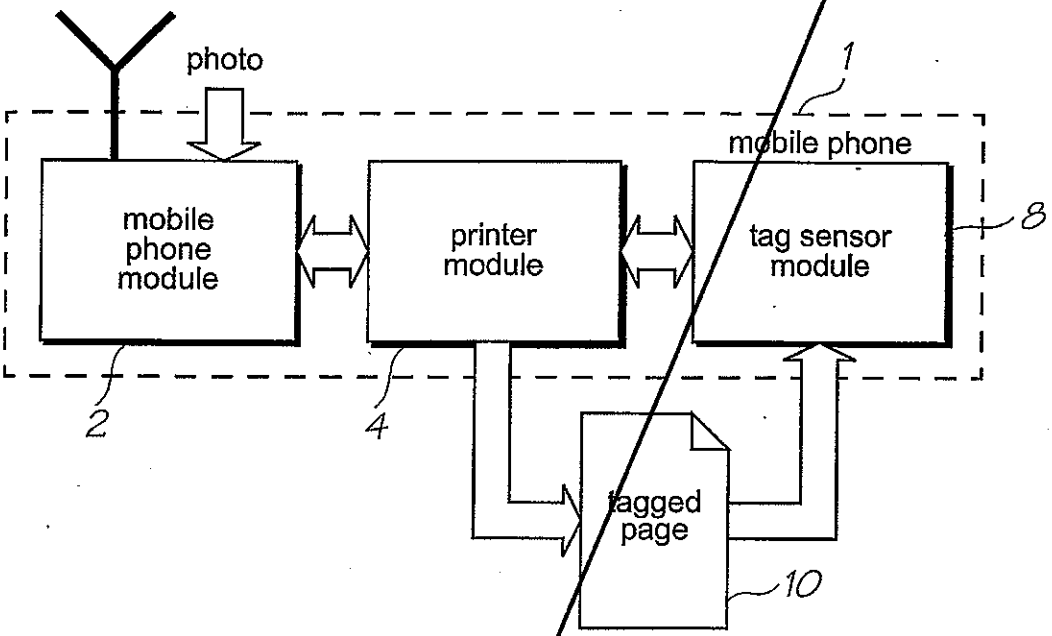
photo
1
mobile phone
mobile phone module
printer module
tag sensor module
8
2
4
tagged page
10

FIG 3

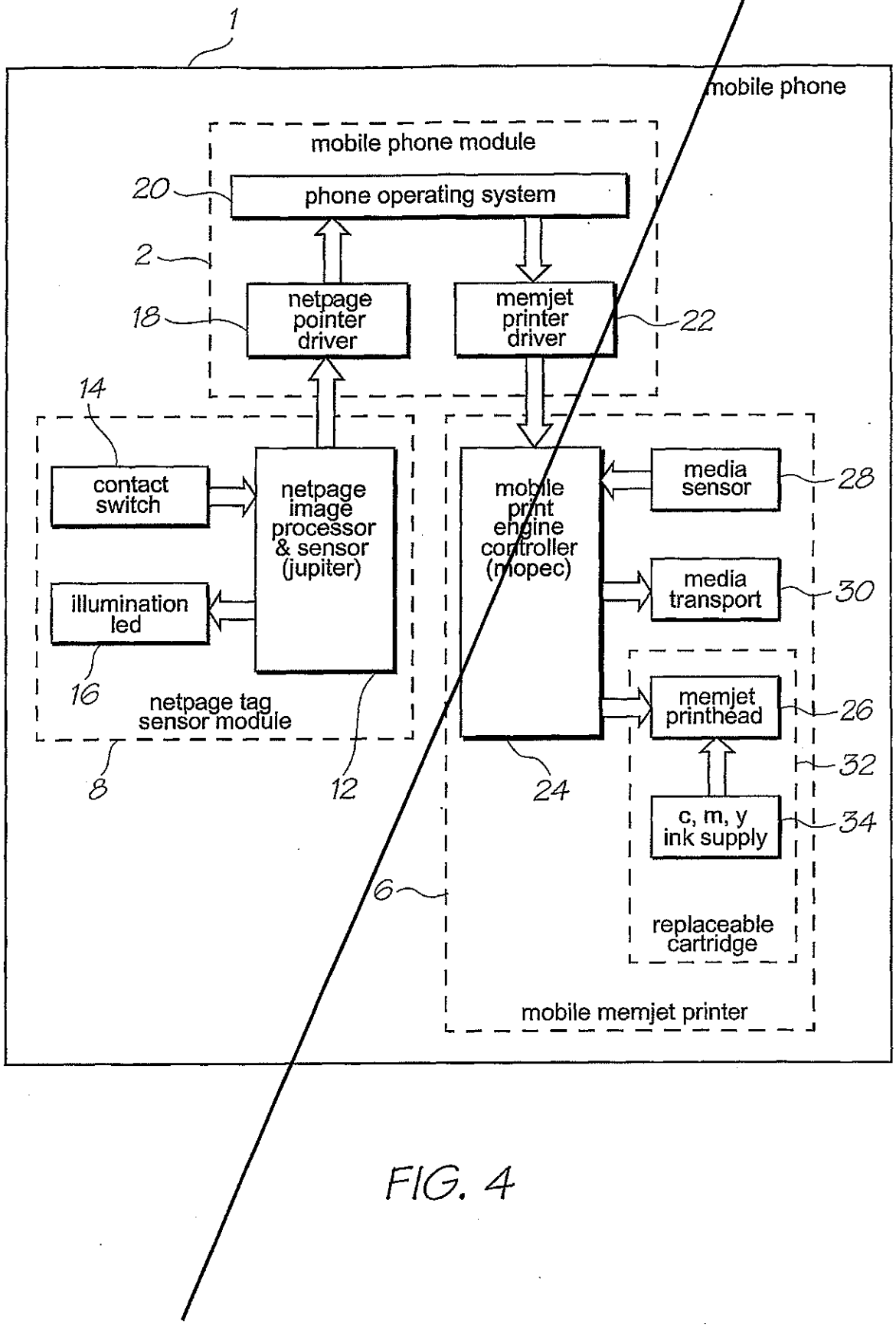
1
mobile phone
mobile phone module
20
phone operating system
2
18
netpage pointer driver
memjet printer driver
22
14
contact switch
illumination led
16
netpage image processor & sensor (jupiter)
netpage tag sensor module
8
12
mobile print engine controller (mopec)
24
media sensor
28
media transport
30
memjet printhead
26
32
c, m, y ink supply
34
6
replaceable cartridge
mobile memjet printer

FIG. 4

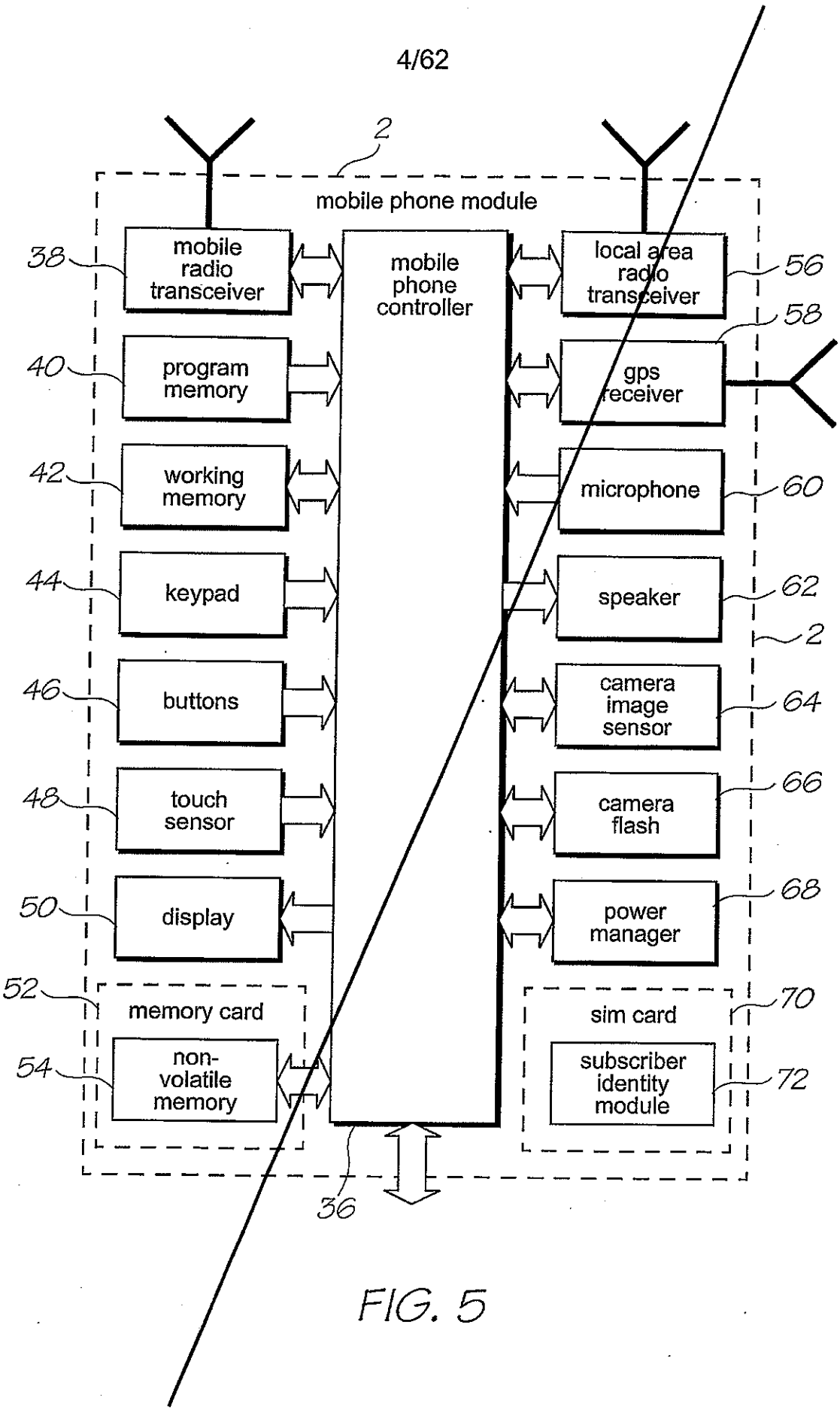
2
mobile phone module
38
mobile radio transceiver
mobile phone controller
local area radio transceiver
56
58
40
program memory
gps receiver
42
working memory
microphone
60
44
keypad
speaker
62
2
46
buttons
camera image sensor
64
48
touch sensor
camera flash
66
50
display
power manager
68
52
memory card
sim card
70
54
non-volatile memory
subscriber identity module
72
36

FIG. 5

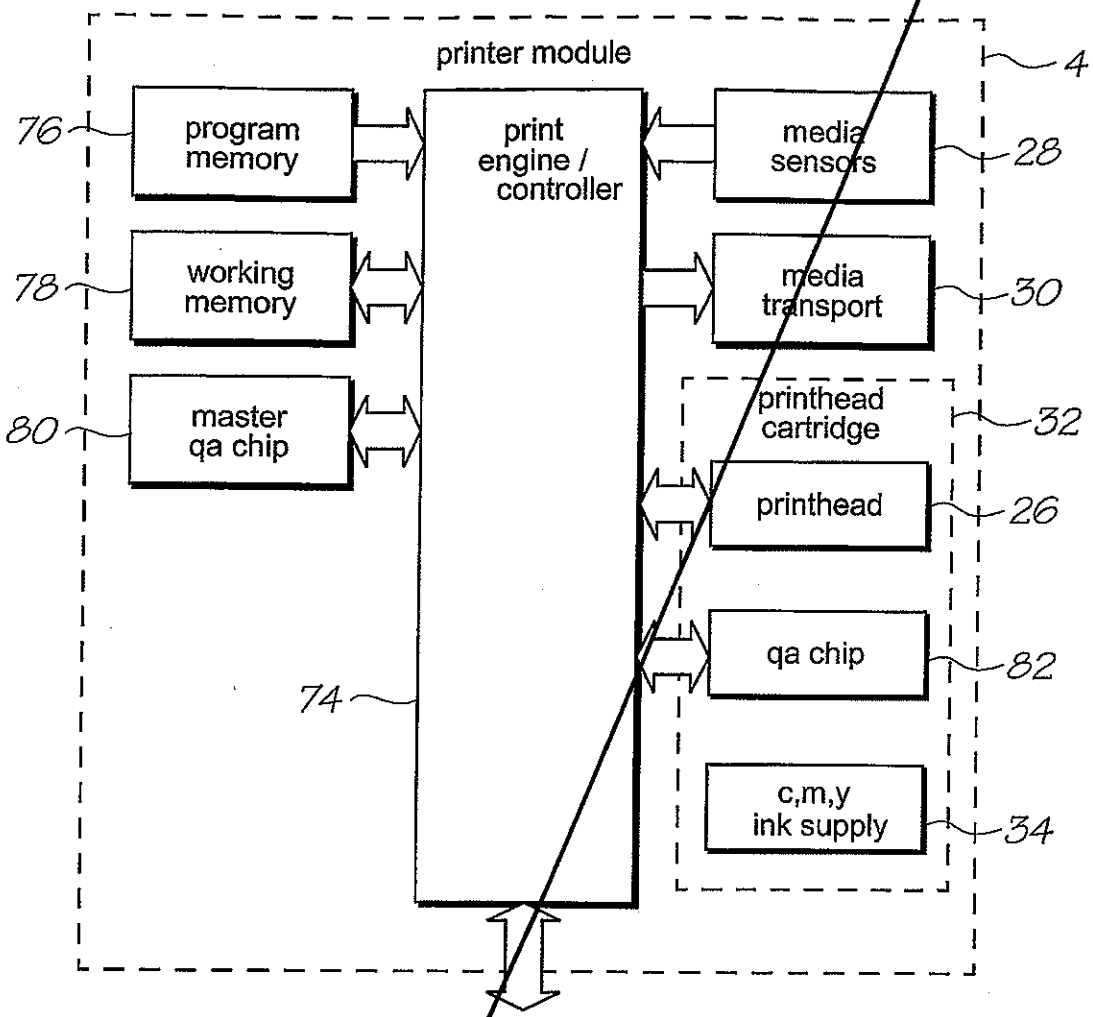
printer module
4
76
program memory
print engine / controller
media sensors
28
78
working memory
media transport
30
80
master qa chip
printhead cartridge
32
printhead
26
qa chip
82
74
c,m,y ink supply
34

FIG. 6

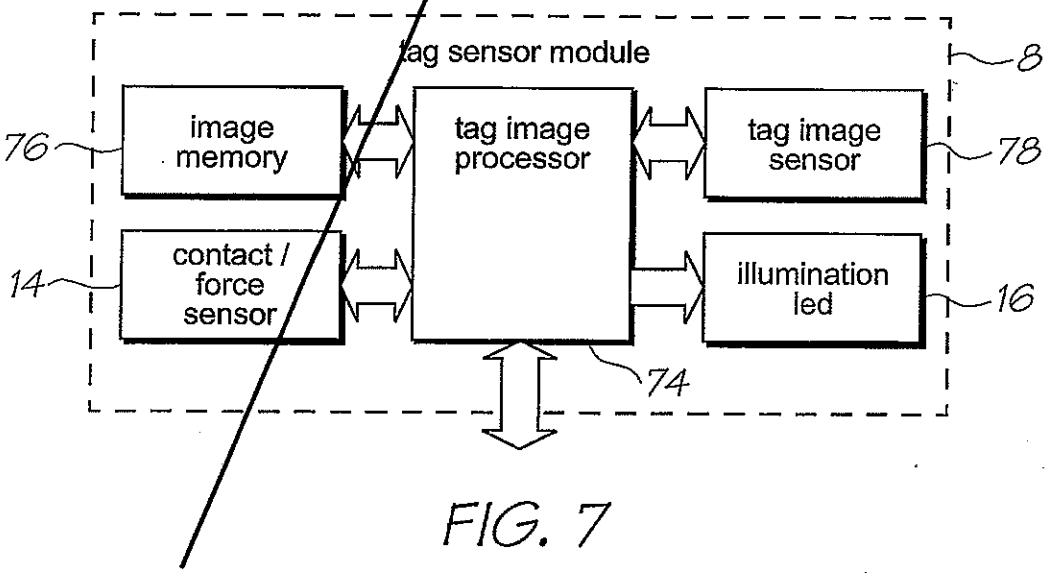
tag sensor module
8
76
image memory
tag image processor
tag image sensor
78
14
contact / force sensor
illumination led
16
74

FIG. 7

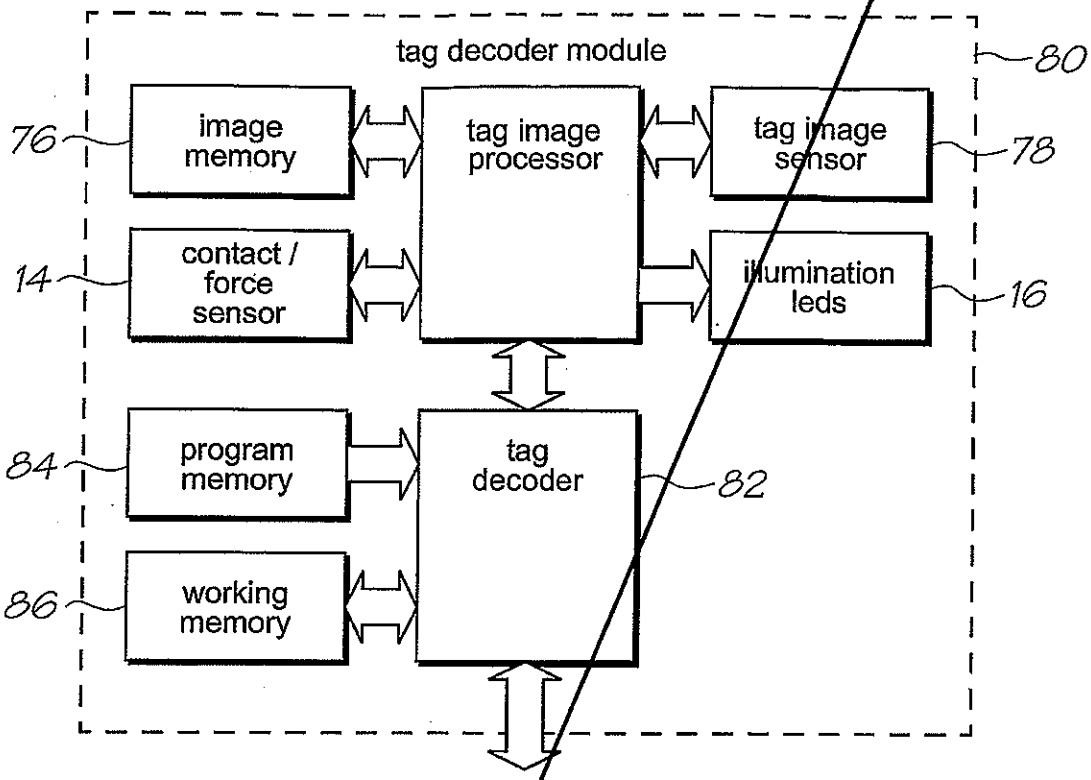
tag decoder module
80
image memory
76
tag image processor
tag image sensor
78
contact / force sensor
14
illumination leds
16
program memory
84
tag decoder
82
working memory
86

FIG. 8

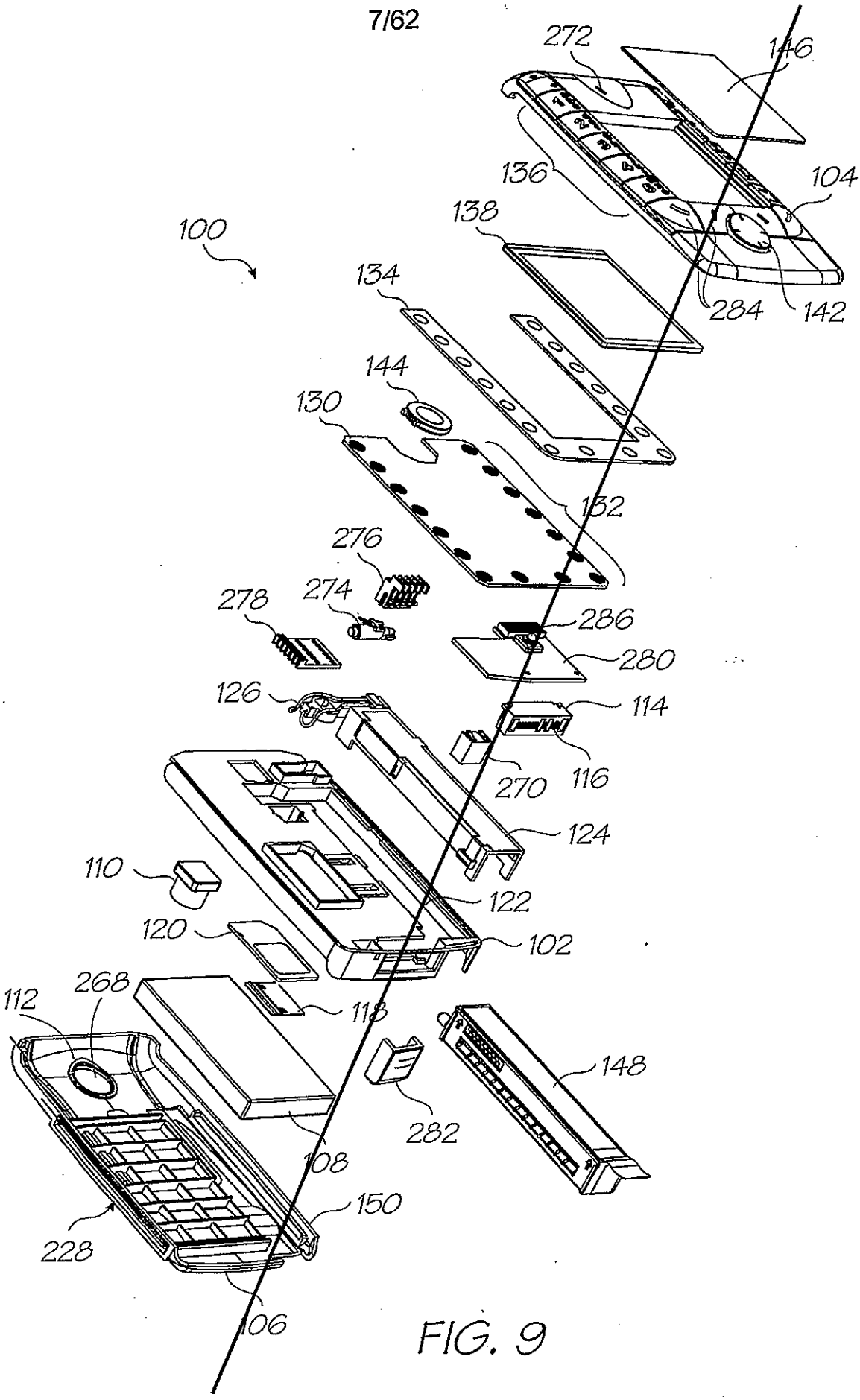
272
146
136
104
138
100
134
284
142
144
130
132
276
274
278
286
280
126
114
270
116
124
110
122
120
102
268
112
118
148
282
108
150
228
106

FIG. 9

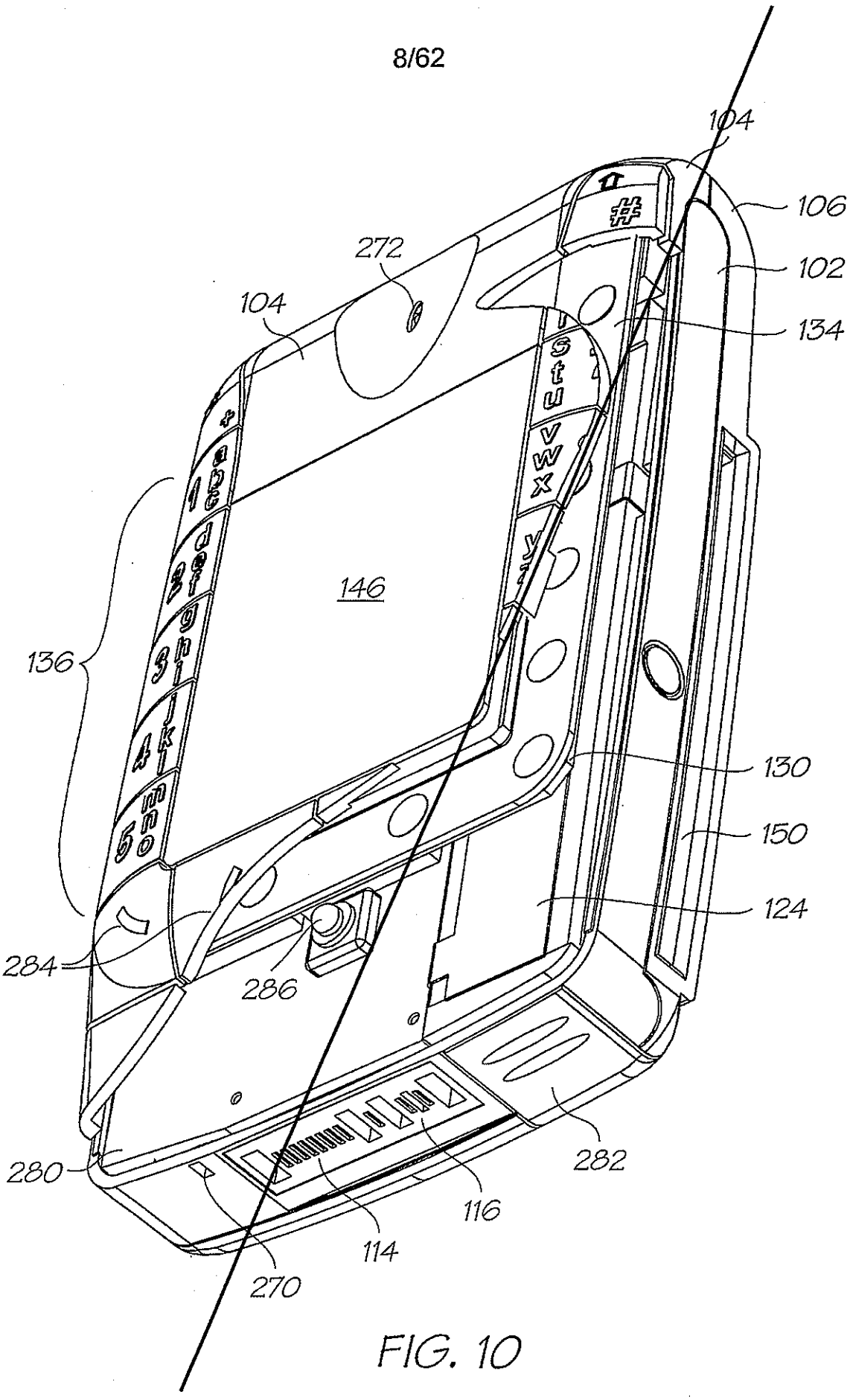
104
106
272
102
104
134
146
136
130
150
124
284
286
280
282
116
114
270

FIG. 10

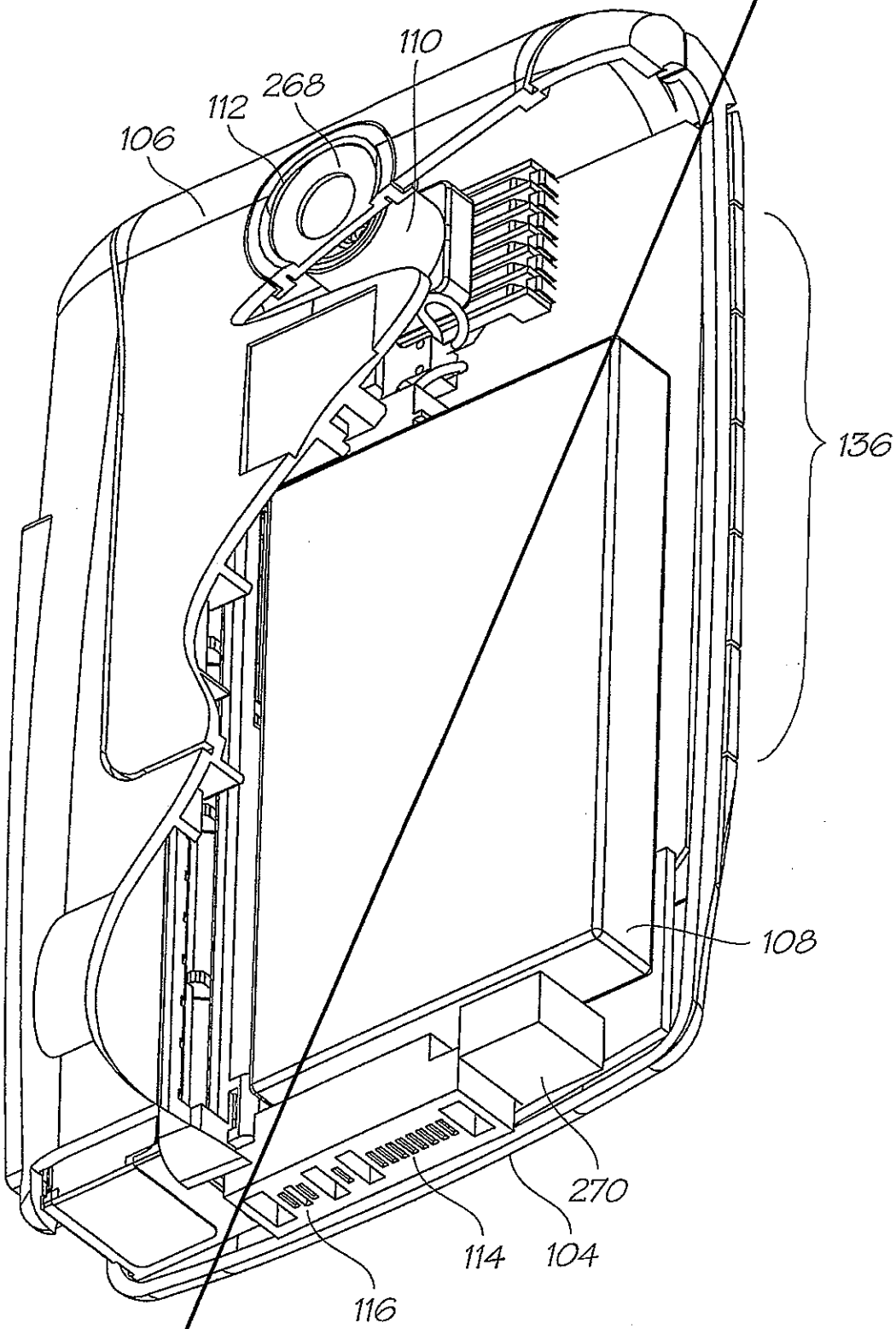

FIG. 11

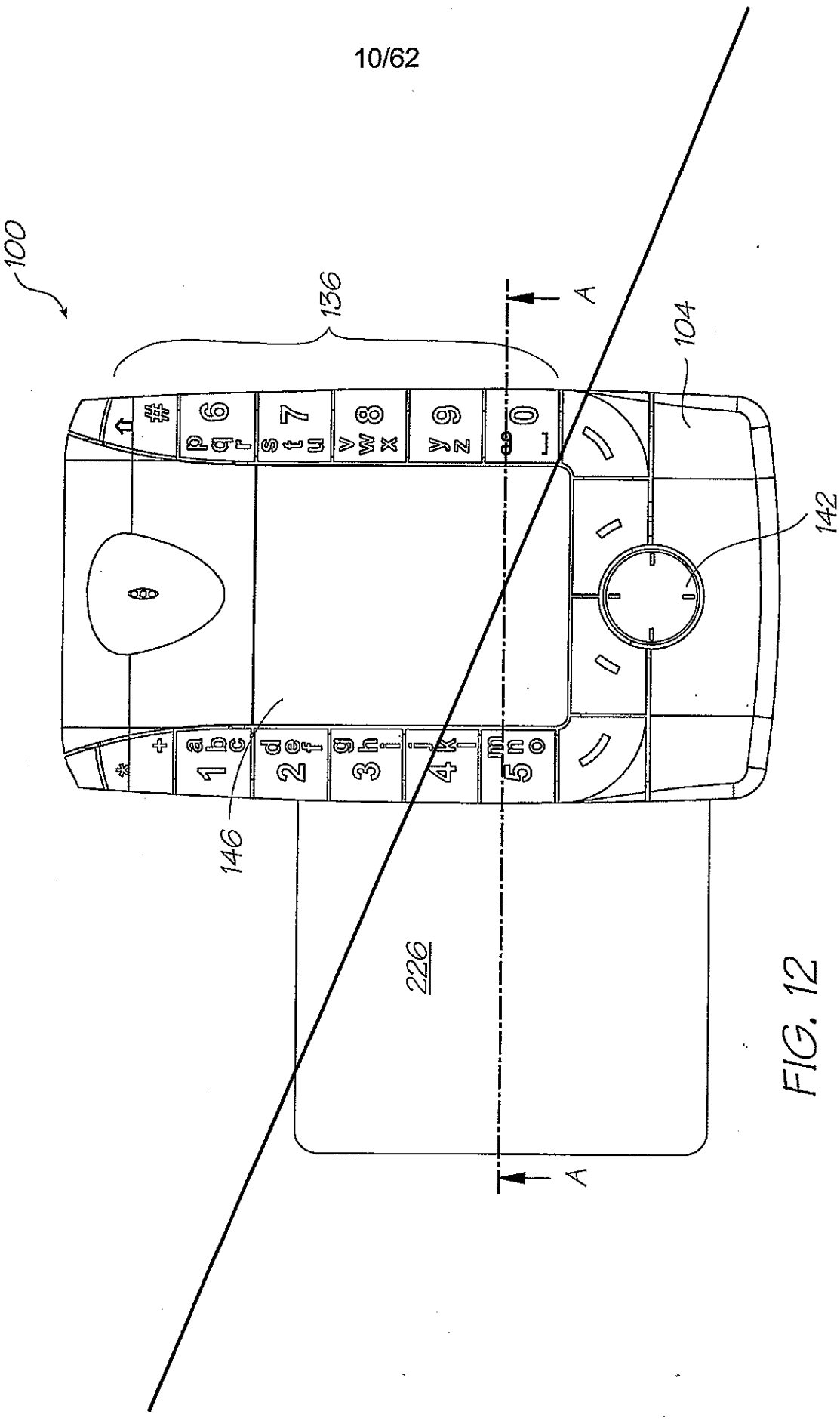

FIG. 12

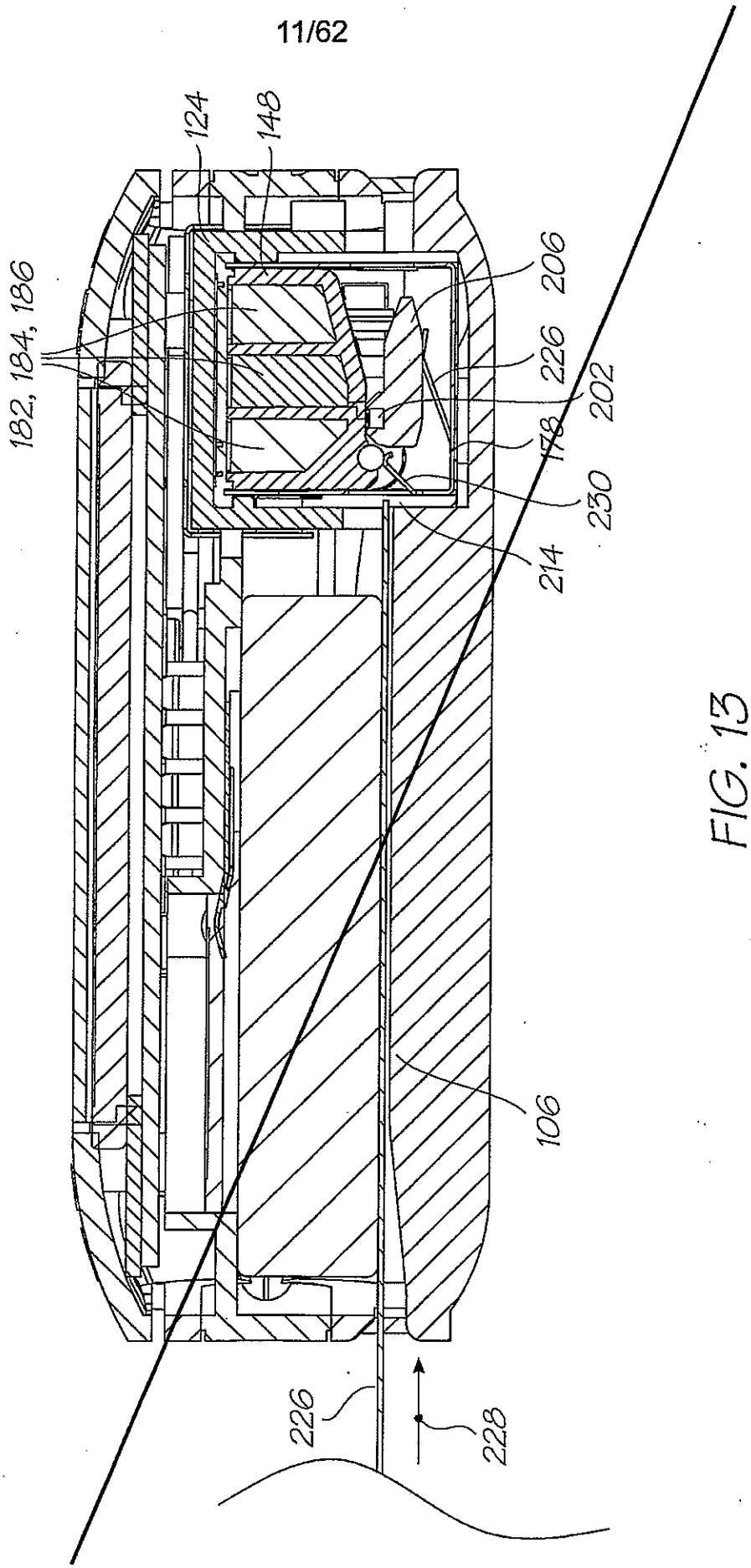

FIG. 13

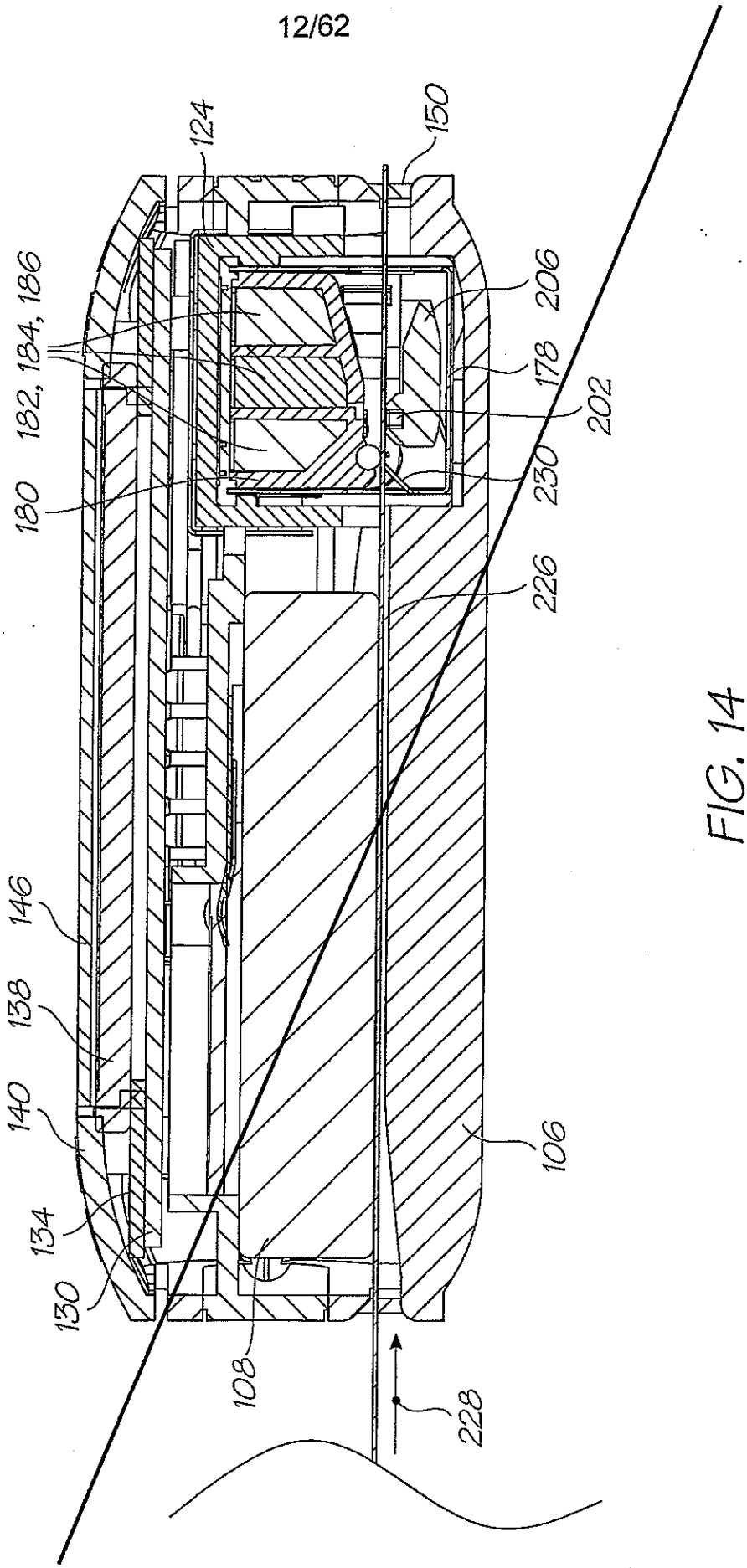
124
150
206
182, 184, 186
178
202
180
230
226
146
138
140
106
134
130
108
228

FIG. 14

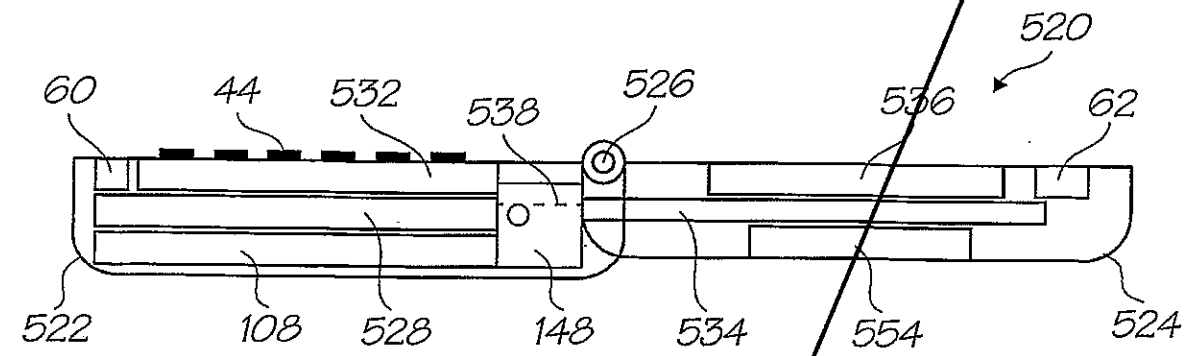
520
60
44
532
538
526
536
62
522
108
528
148
534
554
524

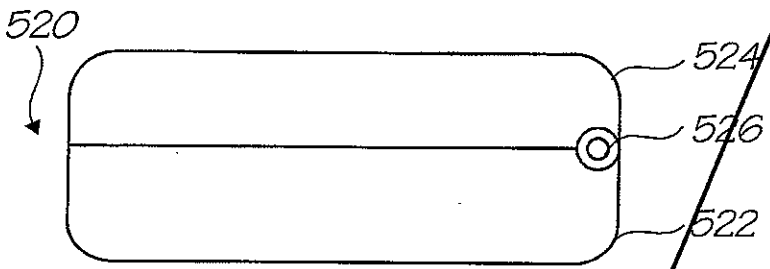
520
524
526
522

FIG. 15

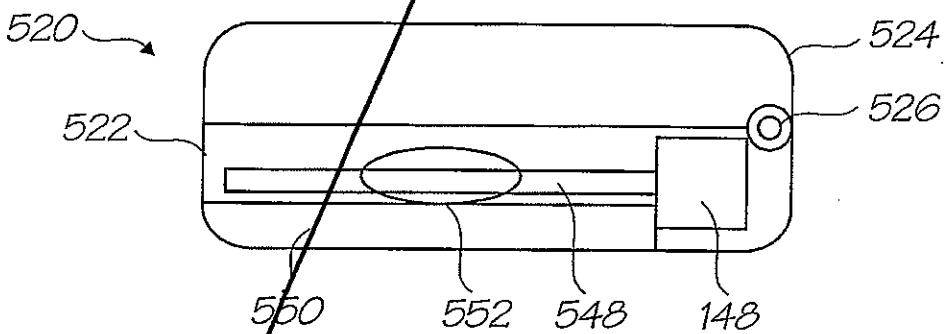
520
524
522
526
550
552
548
148

FIG. 16

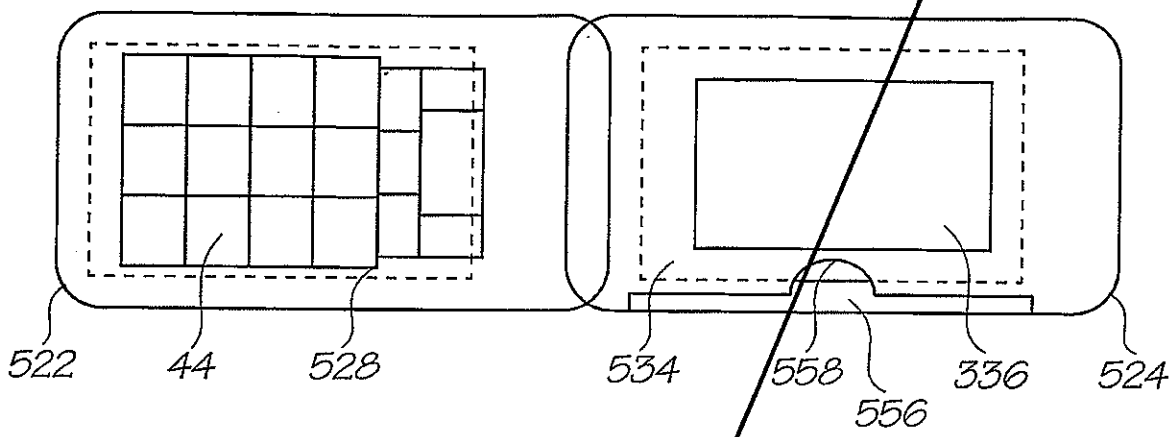
522
44
528
534
558
556
336
524

FIG. 17

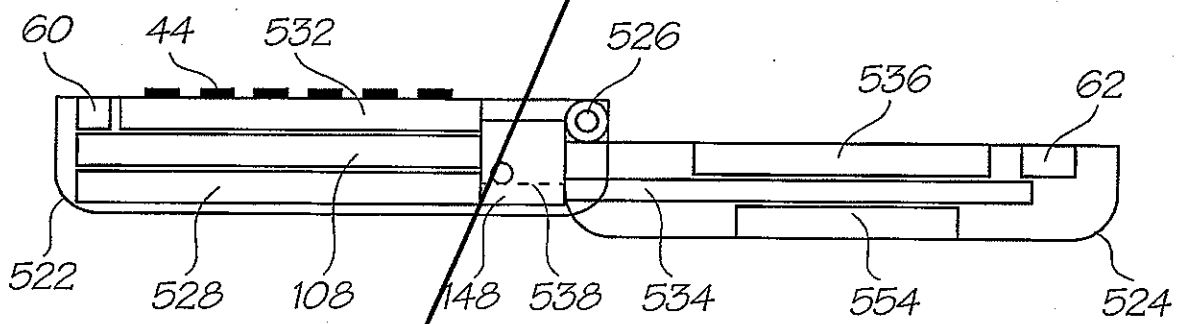
60
44
532
526
536
62
522
528
108
148
538
534
554
524

FIG. 18

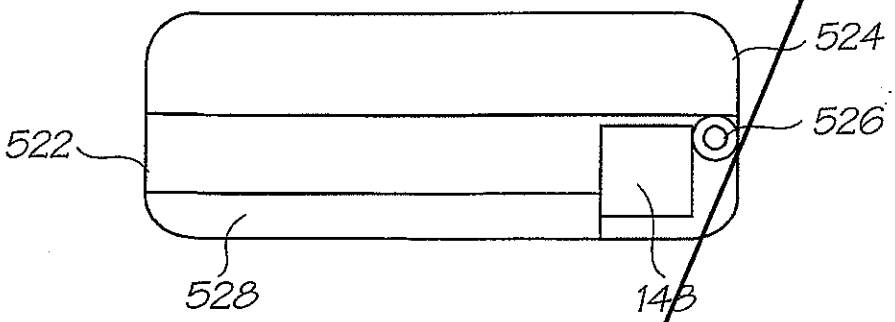

FIG. 19

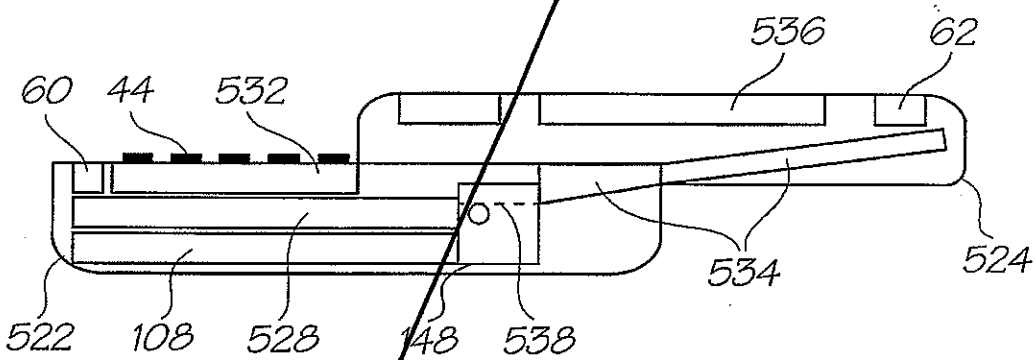

FIG. 20

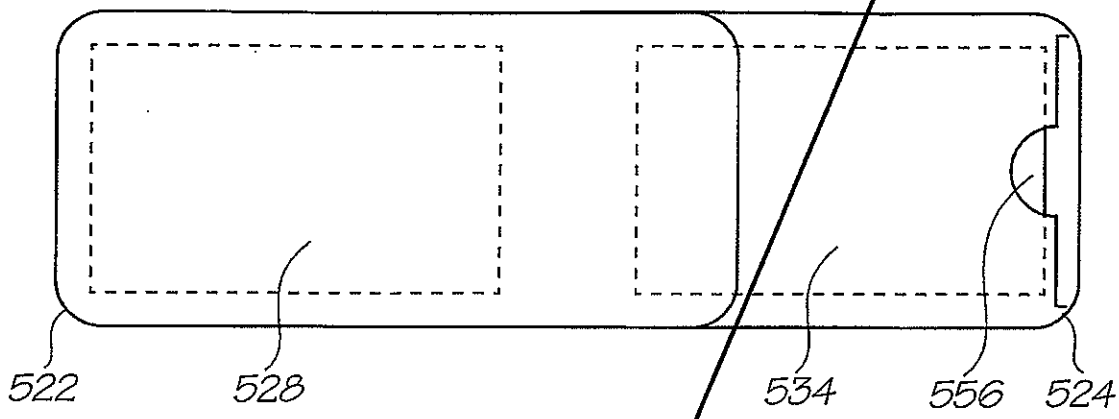

FIG. 21

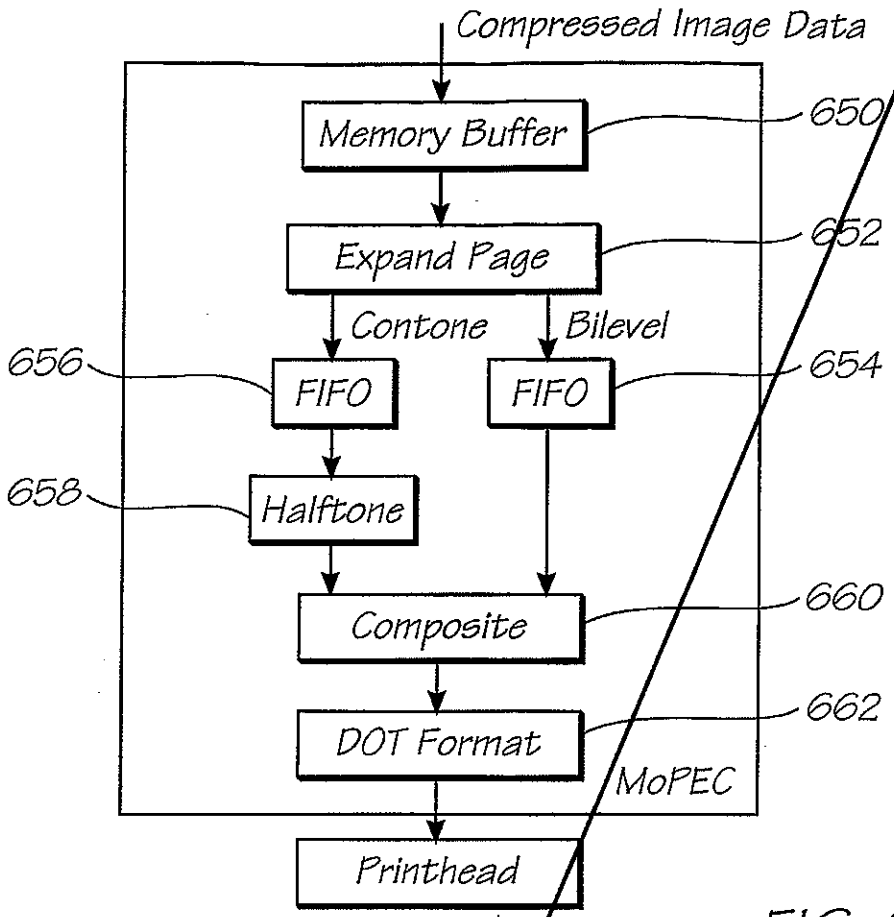
Compressed Image Data
Memory Buffer
650
Expand Page
652
Contone
Bilevel
656
FIFO
FIFO
654
658
Halftone
Composite
660
DOT Format
662
MoPEC
Printhead

FIG. 22

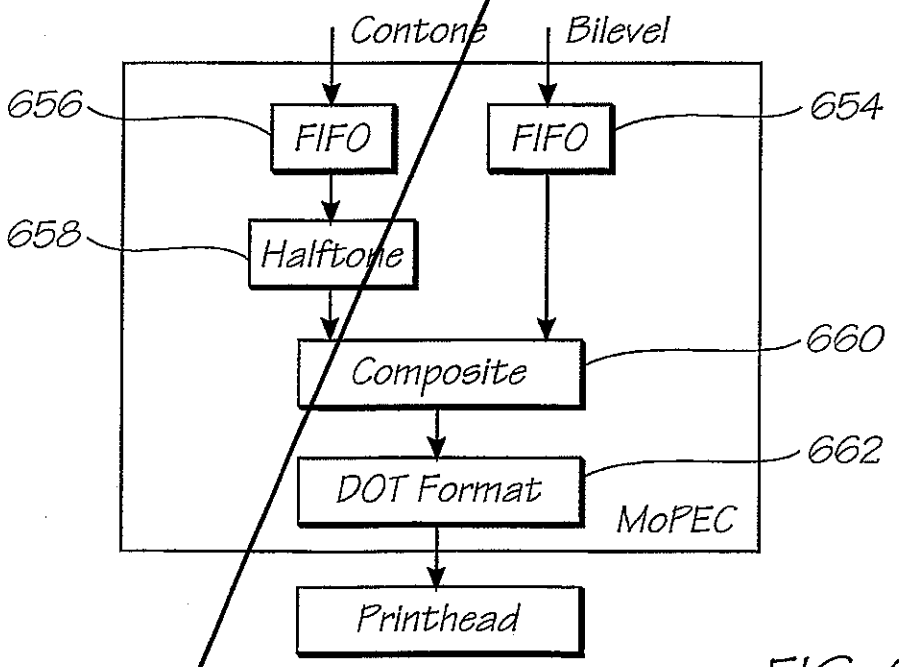
Contone
Bilevel
656
FIFO
FIFO
654
658
Halftone
Composite
660
DOT Format
662
MoPEC
Printhead

FIG. 23

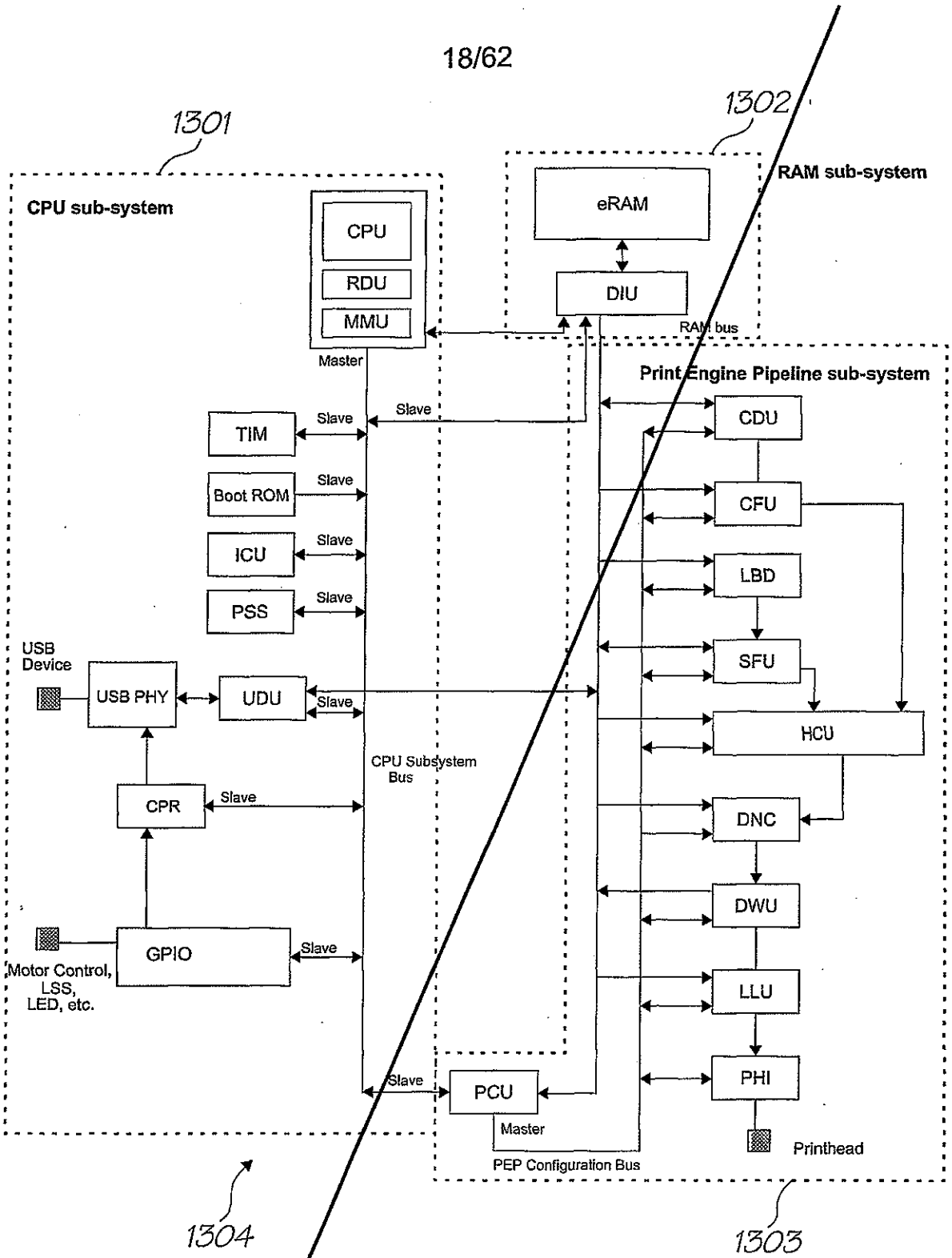
1301
1302
CPU sub-system
RAM sub-system
CPU
RDU
MMU
Master
eRAM
DIU
RAM bus
Print Engine Pipeline sub-system
TIM
Boot ROM
ICU
PSS
Slave
CDU
CFU
LBD
SFU
HCU
DNC
DWU
LLU
PHI
USB Device
USB PHY
UDU
CPR
GPIO
Motor Control, LSS, LED, etc.
CPU Subsystem Bus
PCU
Master
PEP Configuration Bus
Printhead
1304
1303

FIG. 24

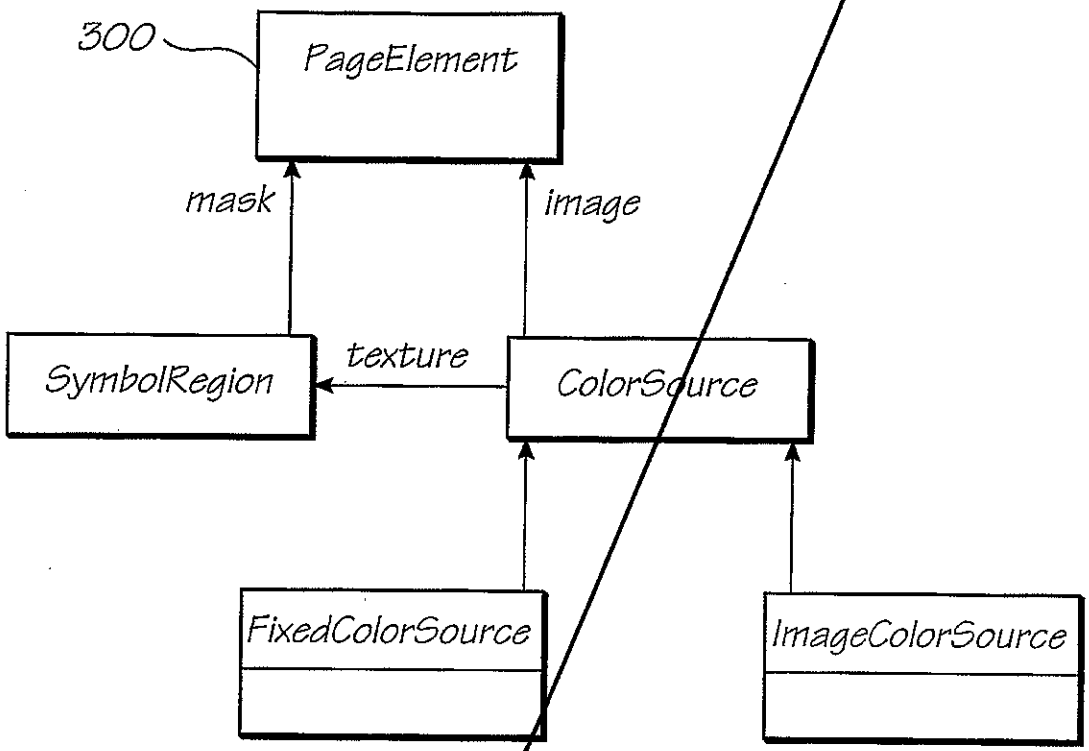
300
PageElement
mask
image
SymbolRegion
texture
ColorSource
FixedColorSource
ImageColorSource

FIG. 25

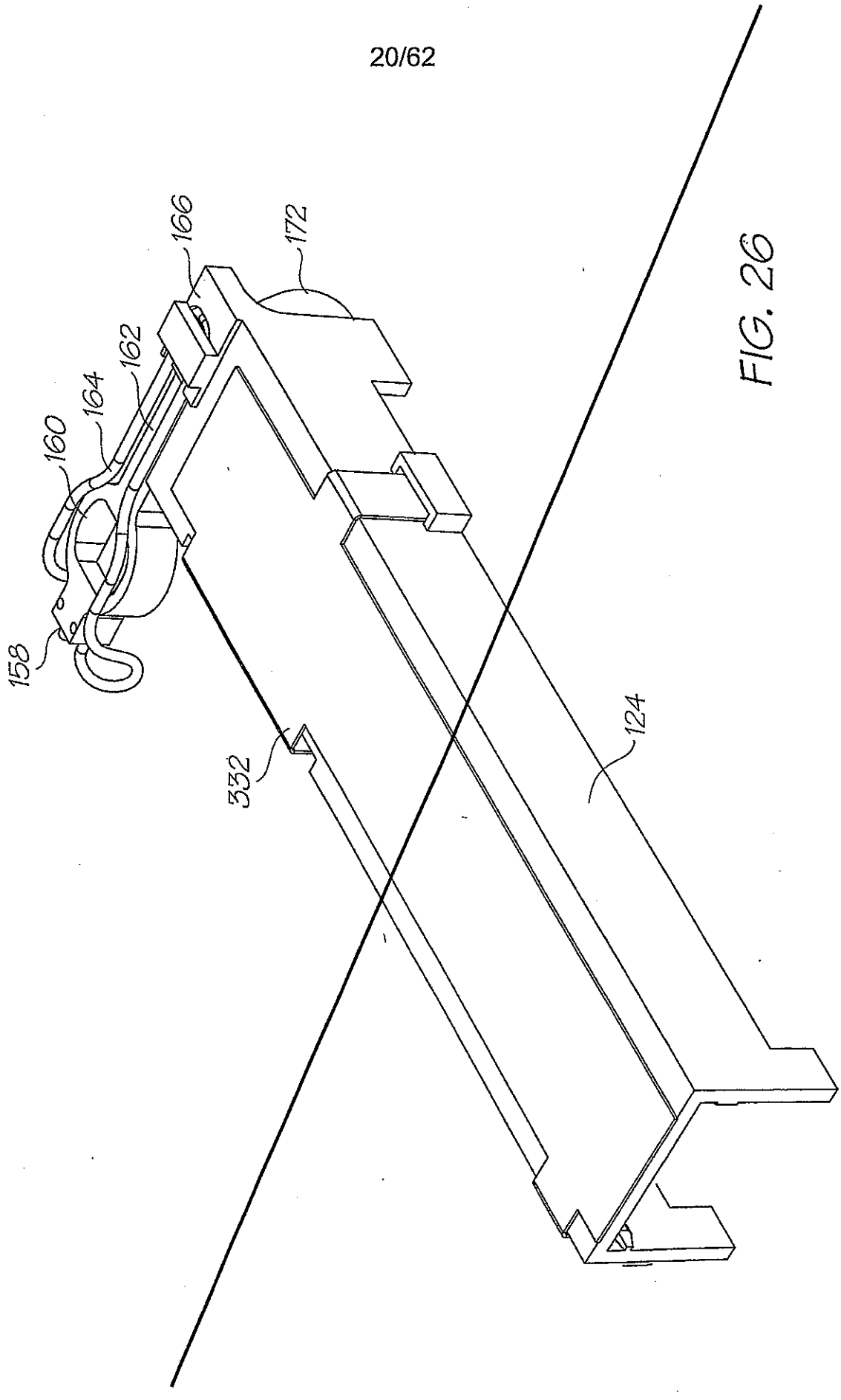

FIG. 26

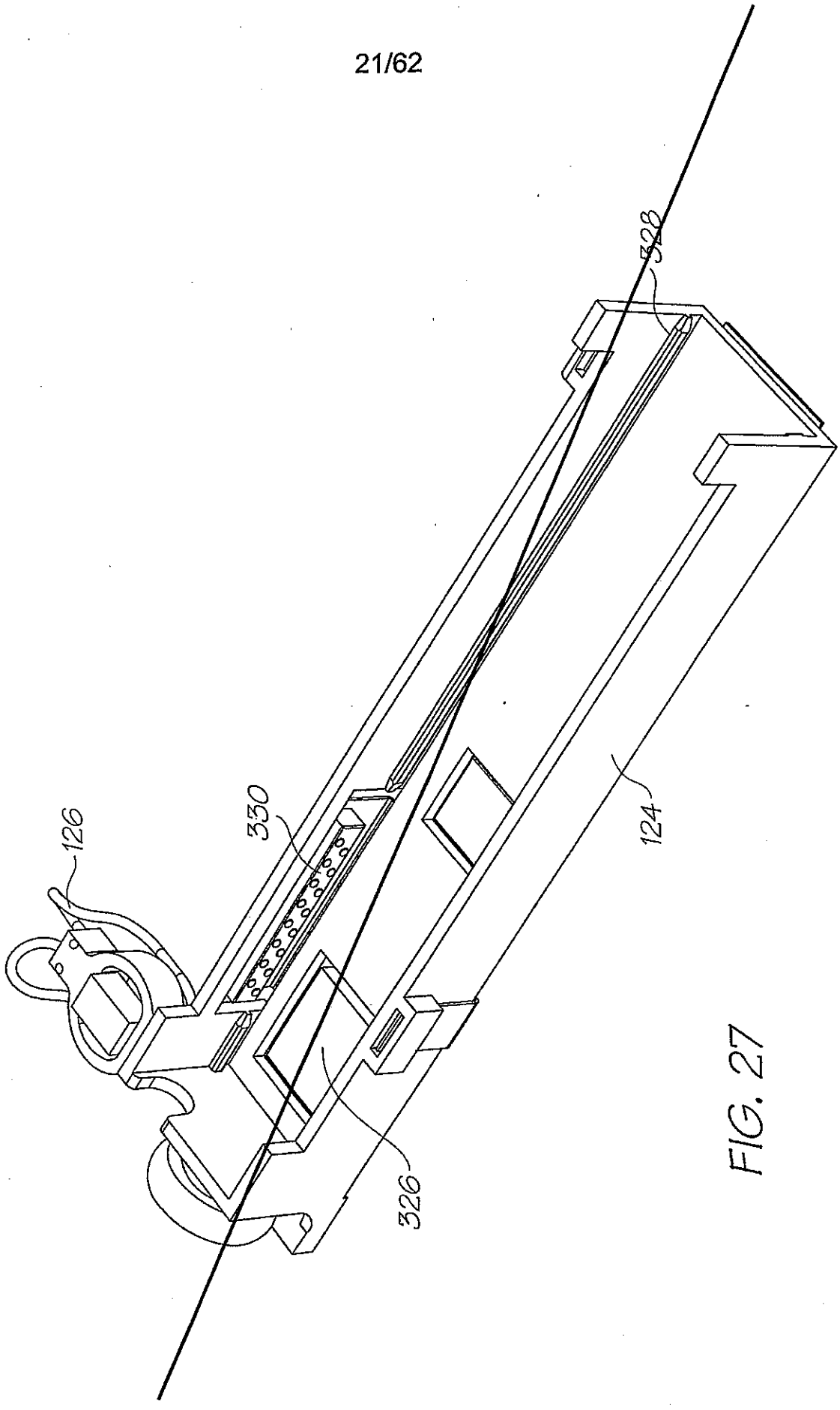

FIG. 27

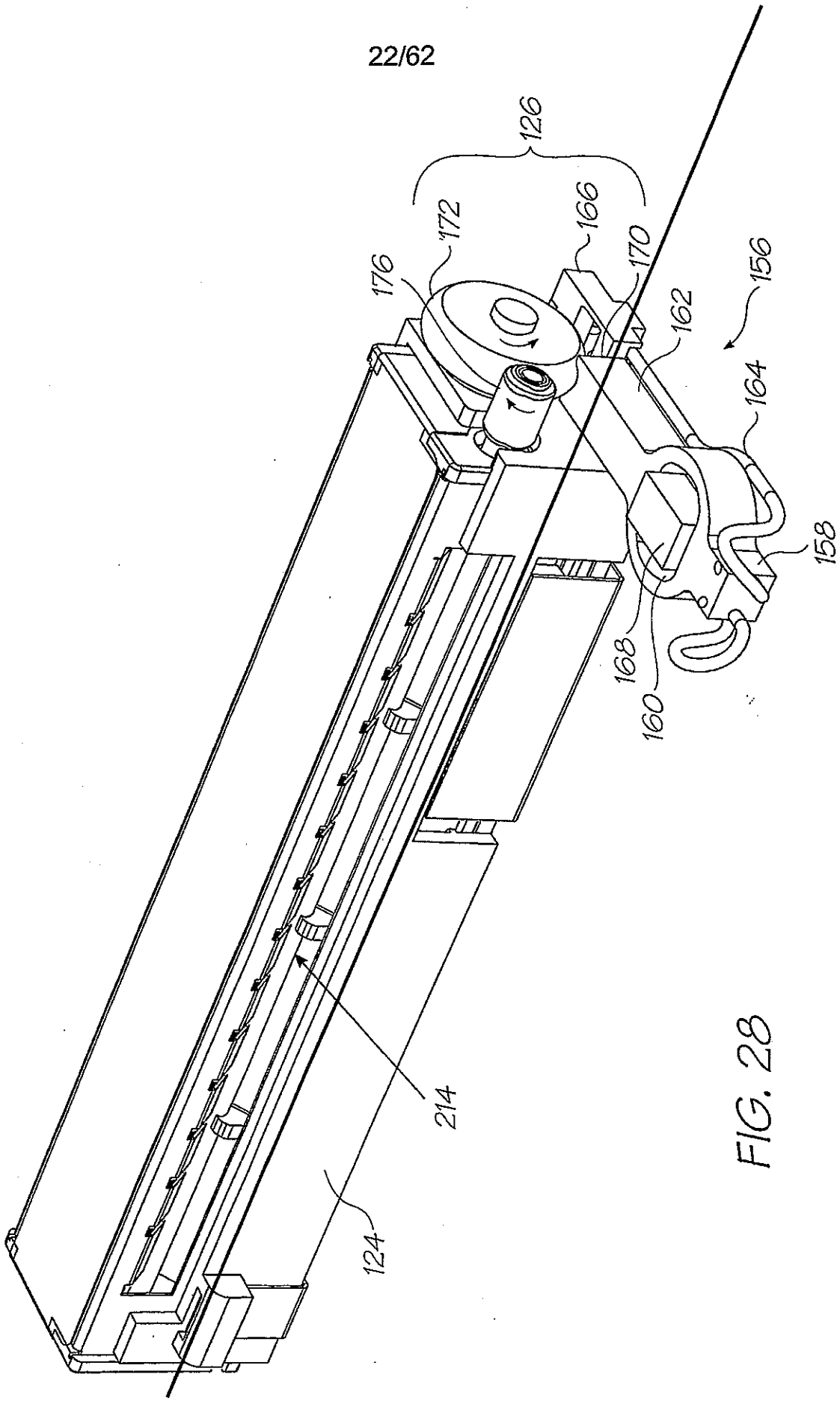

FIG. 28

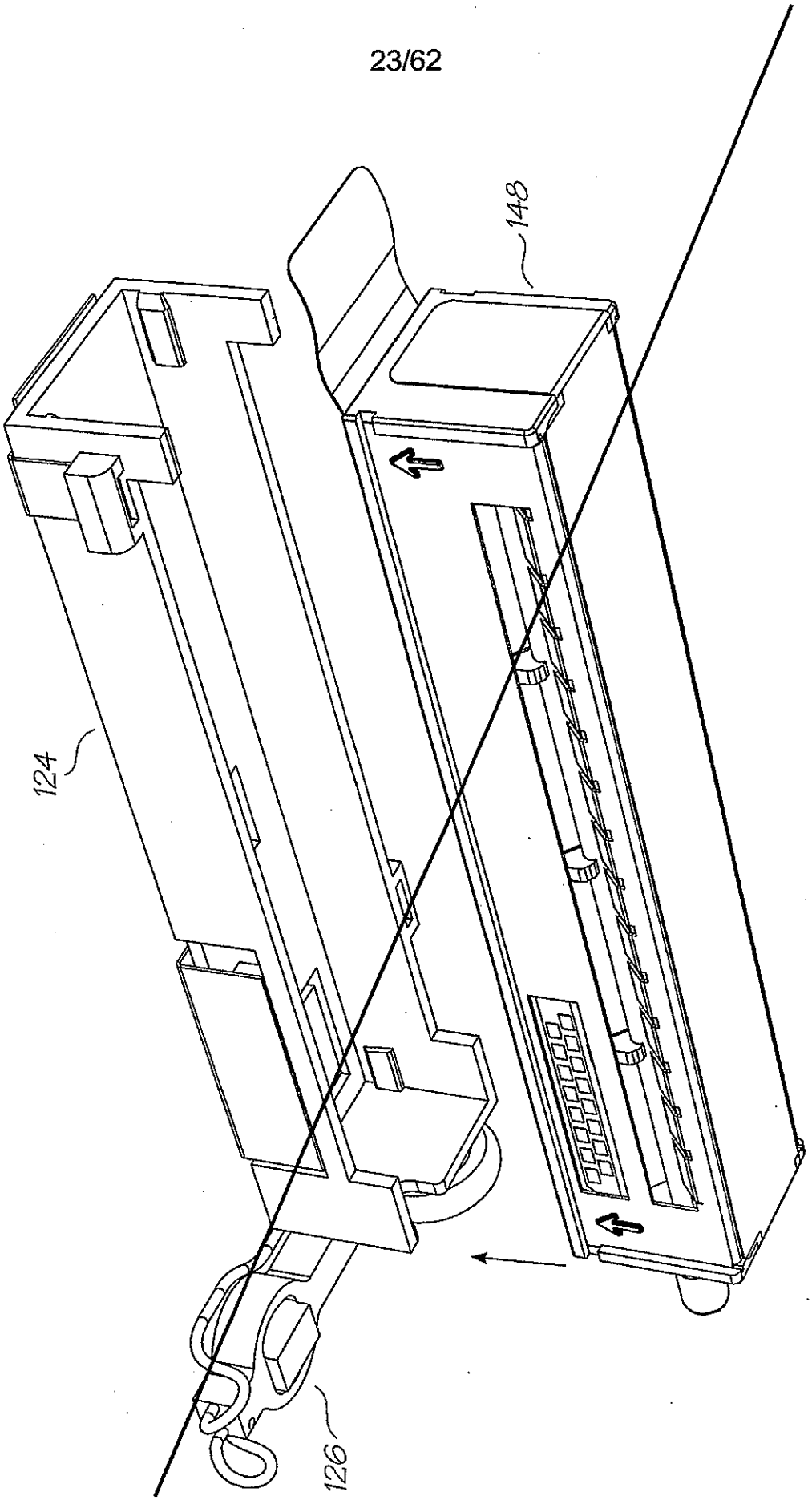

FIG. 29

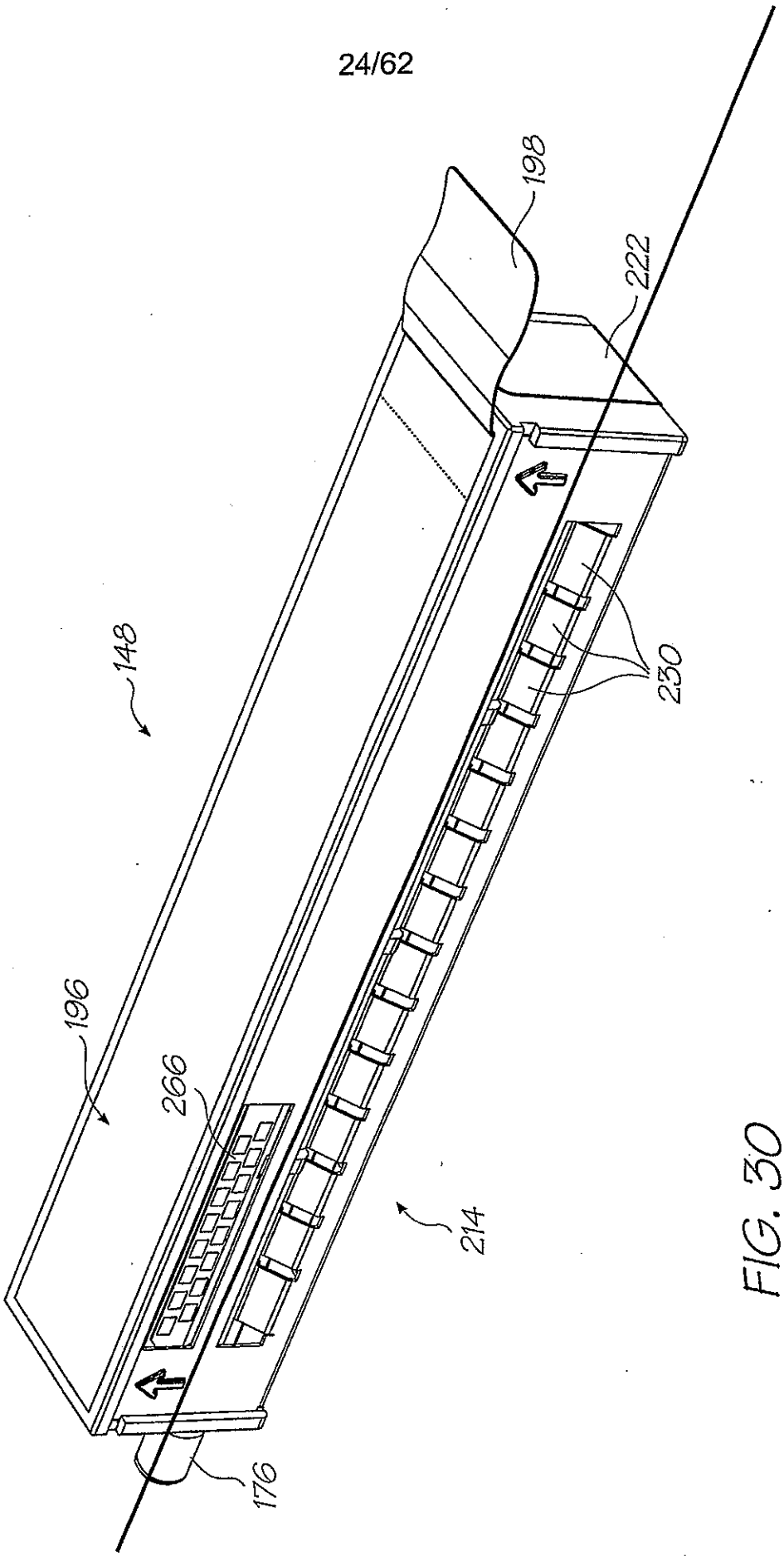

FIG. 30

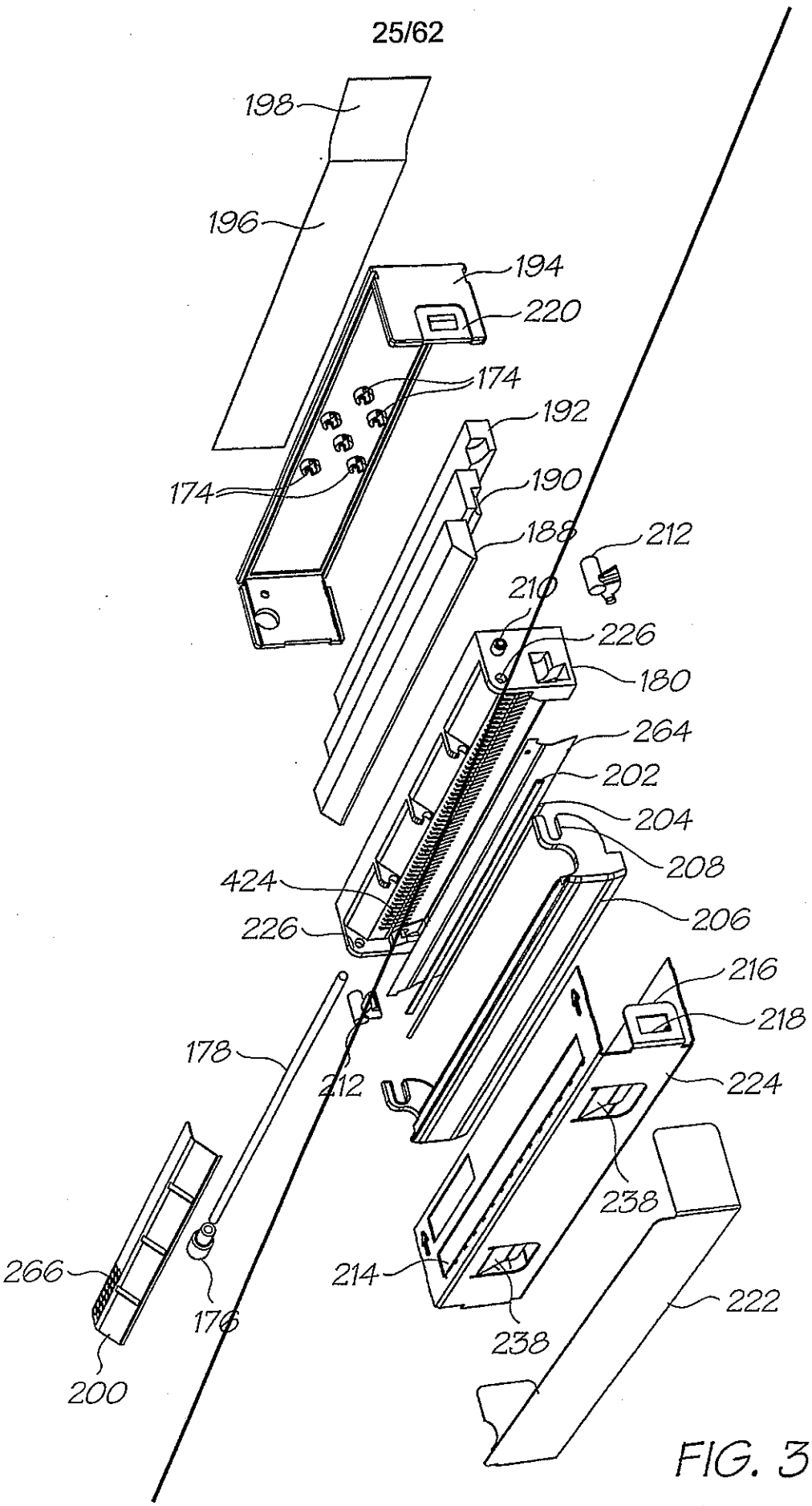
198
196
194
220
174
192
174
190
188
212
210
226
180
264
202
204
208
424
206
226
216
218
178
212
224
238
266
214
222
176
238
200

FIG. 31

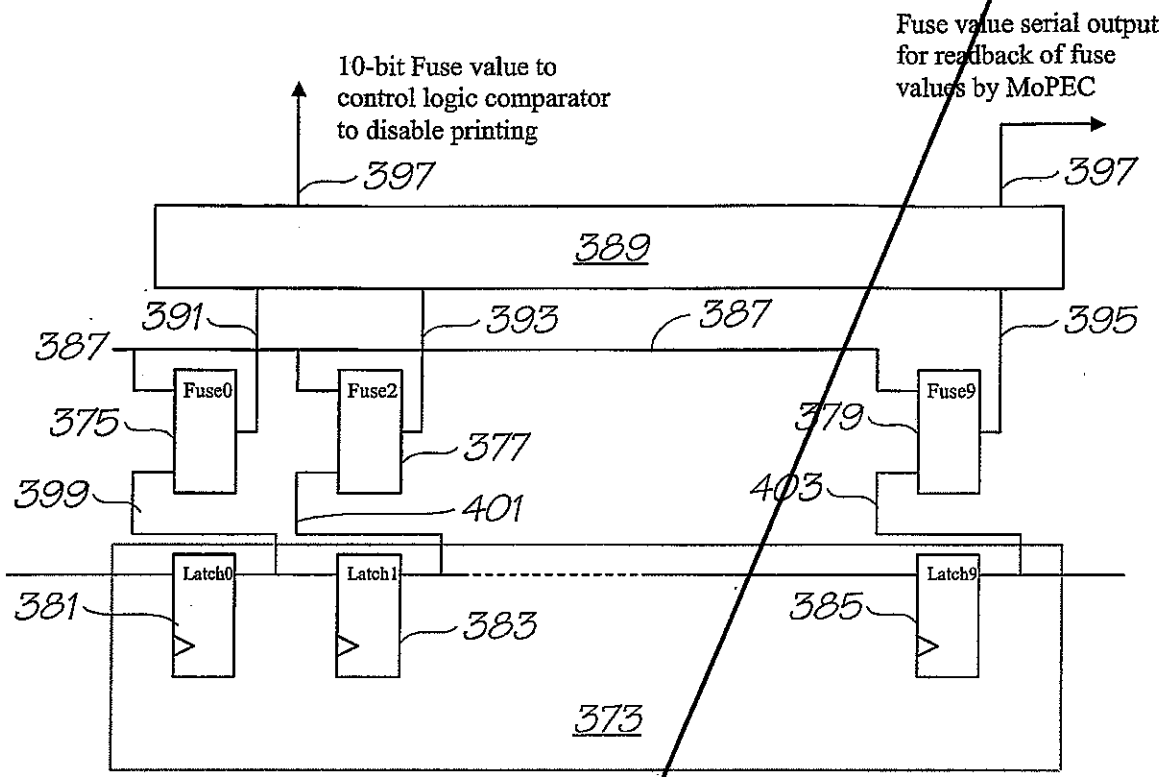
10-bit Fuse value to control logic comparator to disable printing
Fuse value serial output for readback of fuse values by MoPEC
397
397
389
391
393
387
387
395
Fuse0
Fuse2
Fuse9
375
377
379
399
401
403
Latch0
Latch1
Latch9
381
383
385
373

FIG. 32

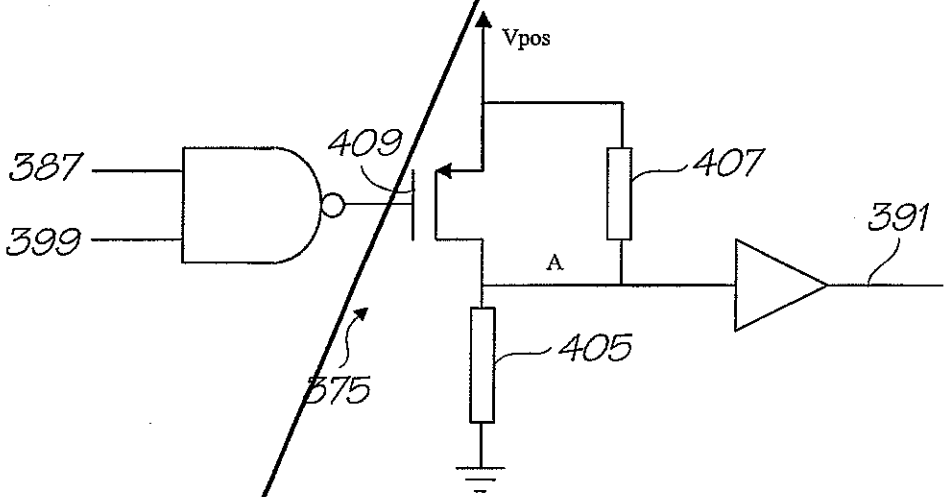
Vpos
387
399
409
407
391
A
405
375

FIG. 33

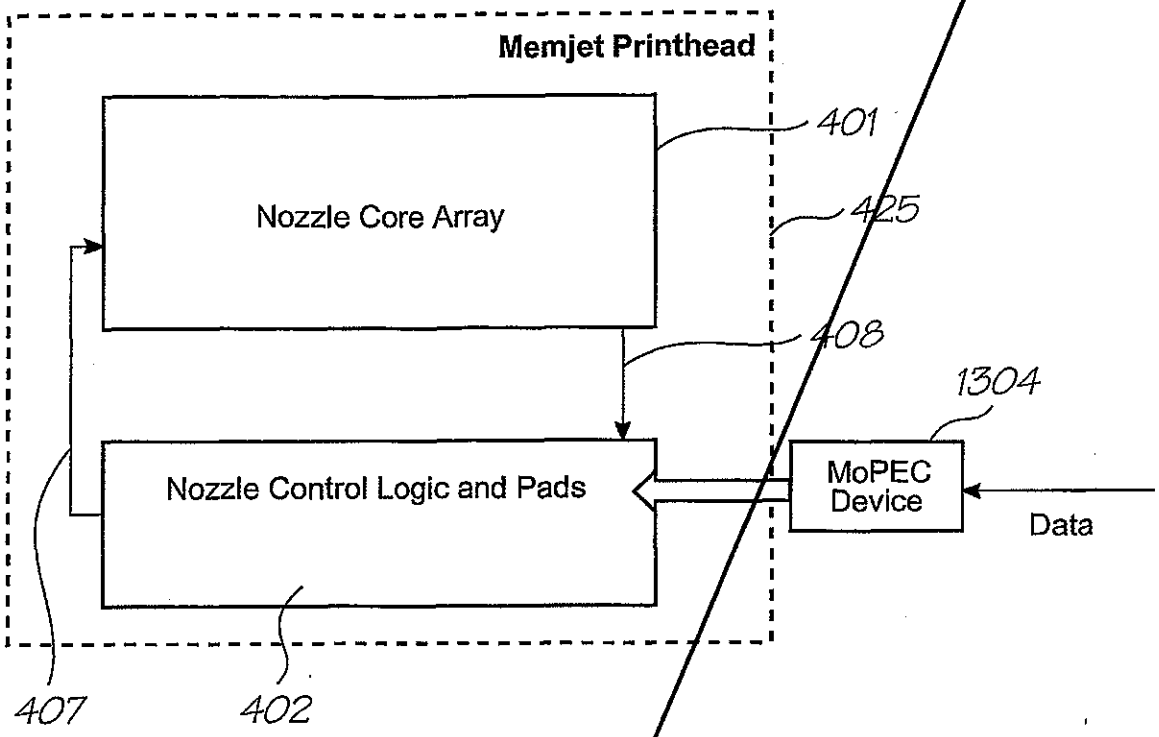
Memjet Printhead
Nozzle Core Array
Nozzle Control Logic and Pads
MoPEC Device
Data
401
425
408
1304
407
402

FIG. 34

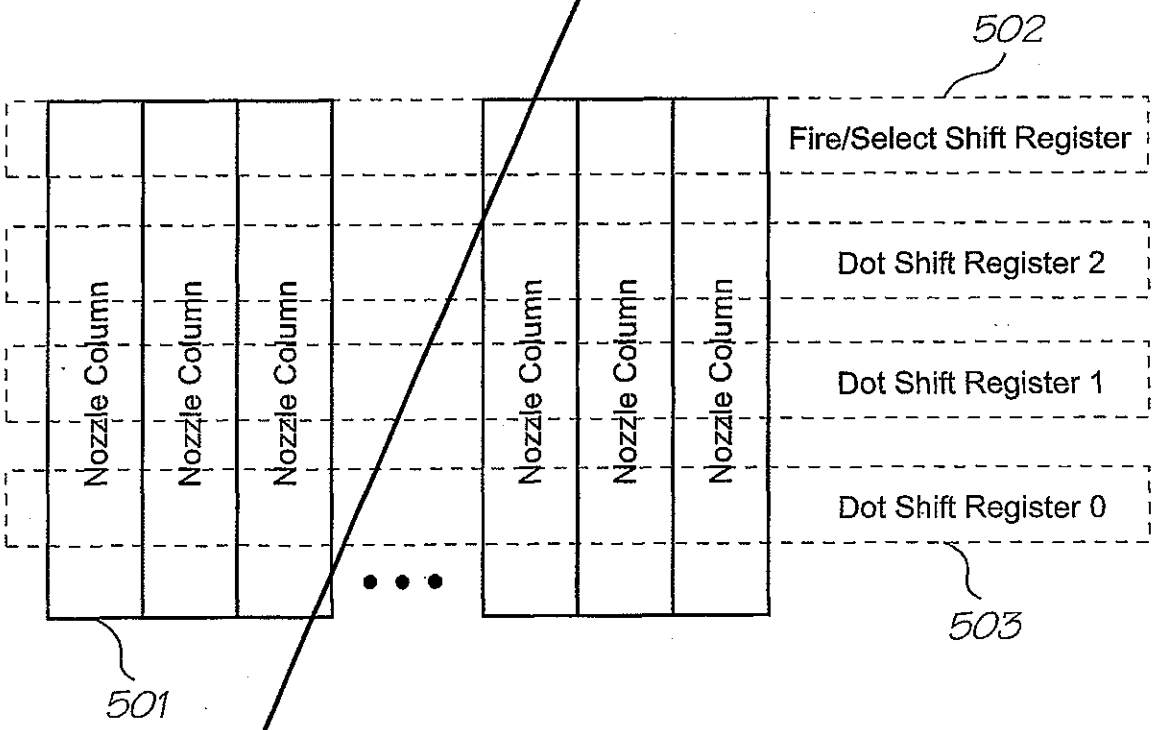
502
Fire/Select Shift Register
Dot Shift Register 2
Dot Shift Register 1
Dot Shift Register 0
Nozzle Column
Nozzle Column
Nozzle Column
Nozzle Column
Nozzle Column
Nozzle Column
503
501

FIG. 35

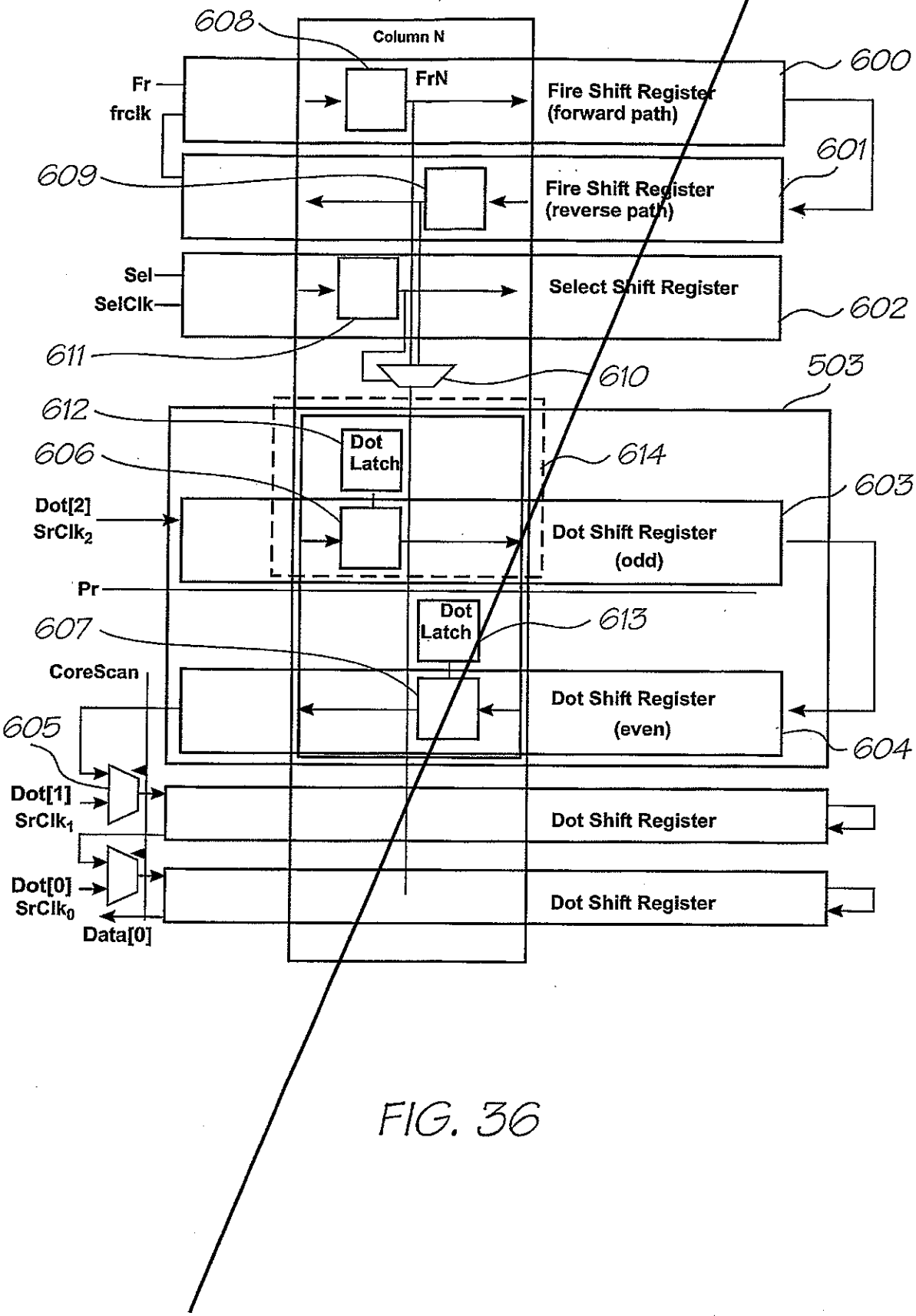
608
Column N
600
Fr
frclk
FrN
Fire Shift Register
(forward path)
601
609
Fire Shift Register
(reverse path)
Sel
SelClk
Select Shift Register
602
611
610
503
612
Dot
Latch
606
614
603
Dot[2]
SrClk2
Dot Shift Register
(odd)
Pr
Dot
Latch
607
613
CoreScan
Dot Shift Register
(even)
605
604
Dot[1]
SrClk1
Dot Shift Register
Dot[0]
SrClk0
Dot Shift Register
Data[0]

FIG. 36

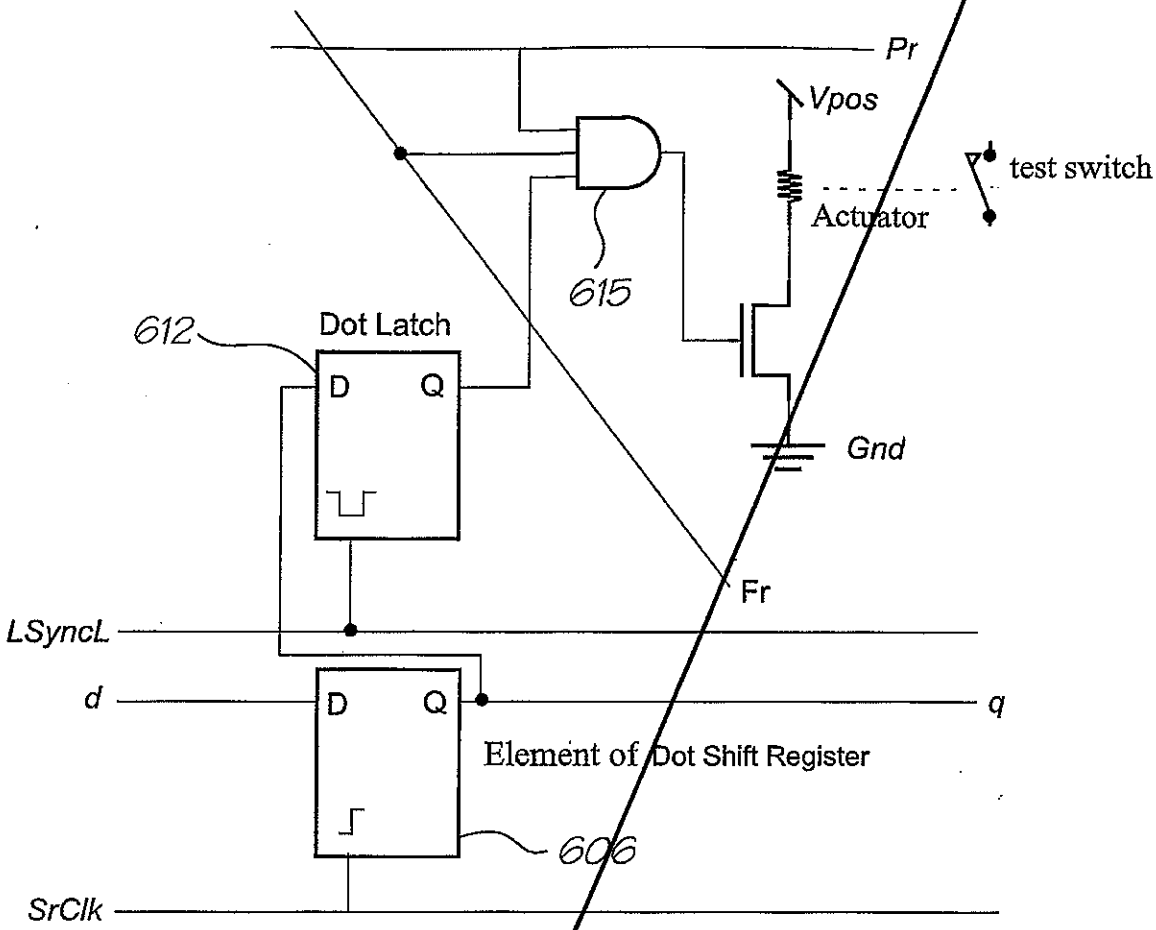
Pr
Vpos
test switch
Actuator
615
612
Dot Latch
D
Q
Gnd
Fr
LSyncL
d
D
Q
q
Element of Dot Shift Register
606
SrClk

FIG. 37

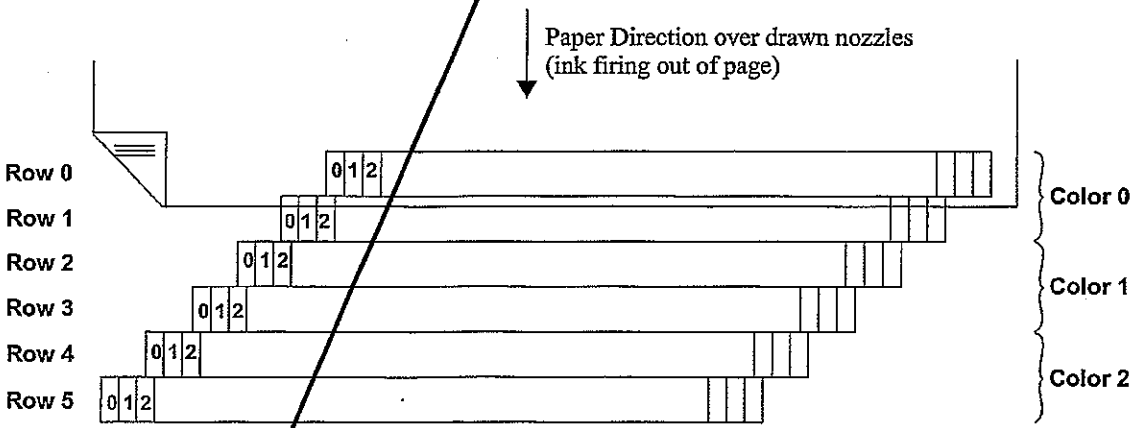
Paper Direction over drawn nozzles
(ink firing out of page)
Row 0
Row 1
Row 2
Row 3
Row 4
Row 5
0 1 2
Color 0
Color 1
Color 2

FIG. 38

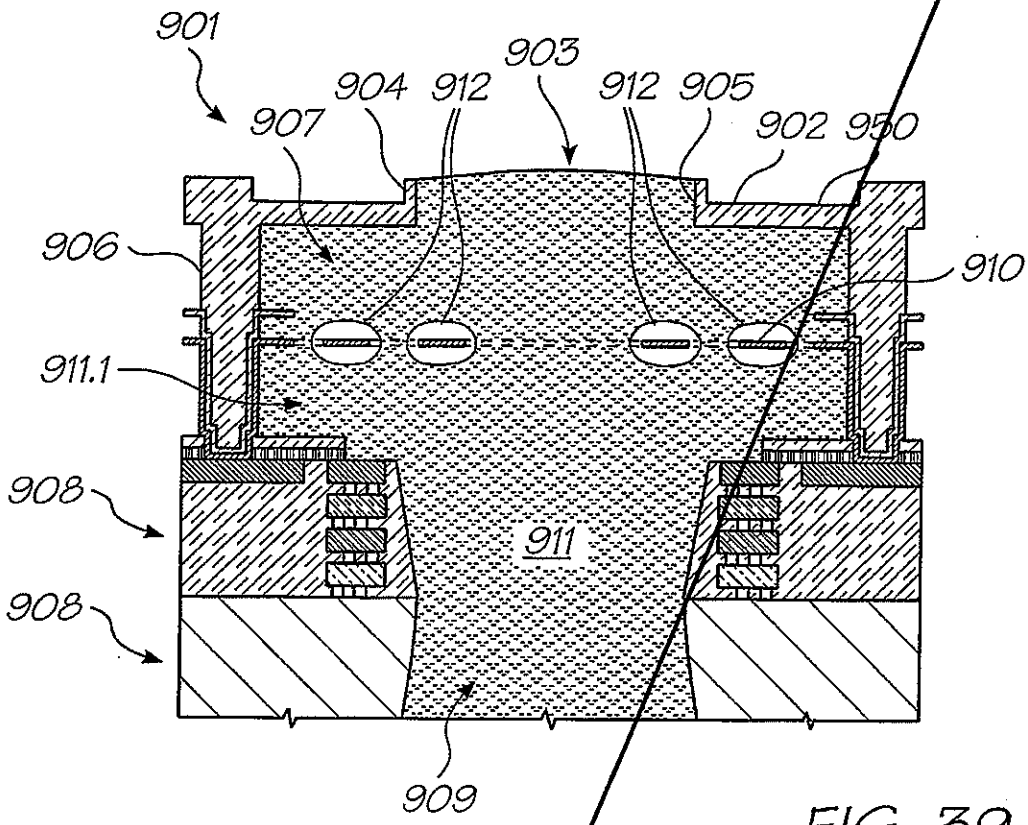
901
903
904
912
912
905
907
902
950
906
910
911.1
908
911
908
909

FIG. 39

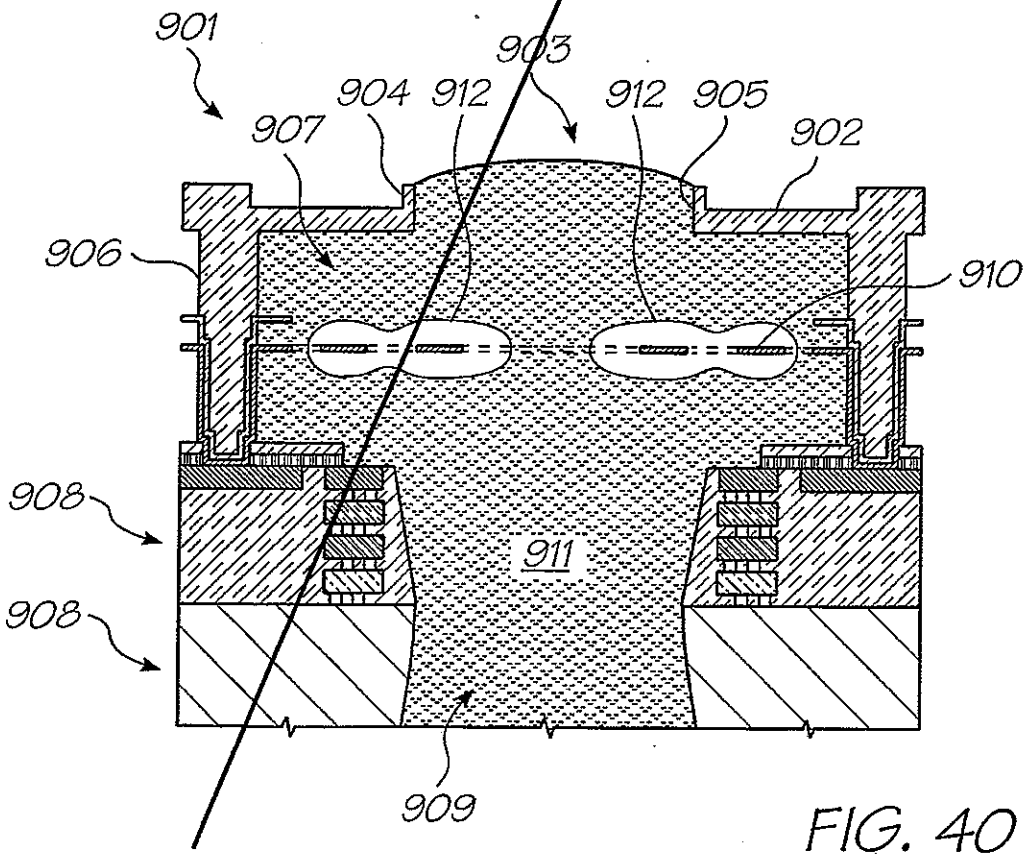
901
903
904
912
912
905
907
902
906
910
908
911
908
909

FIG. 40

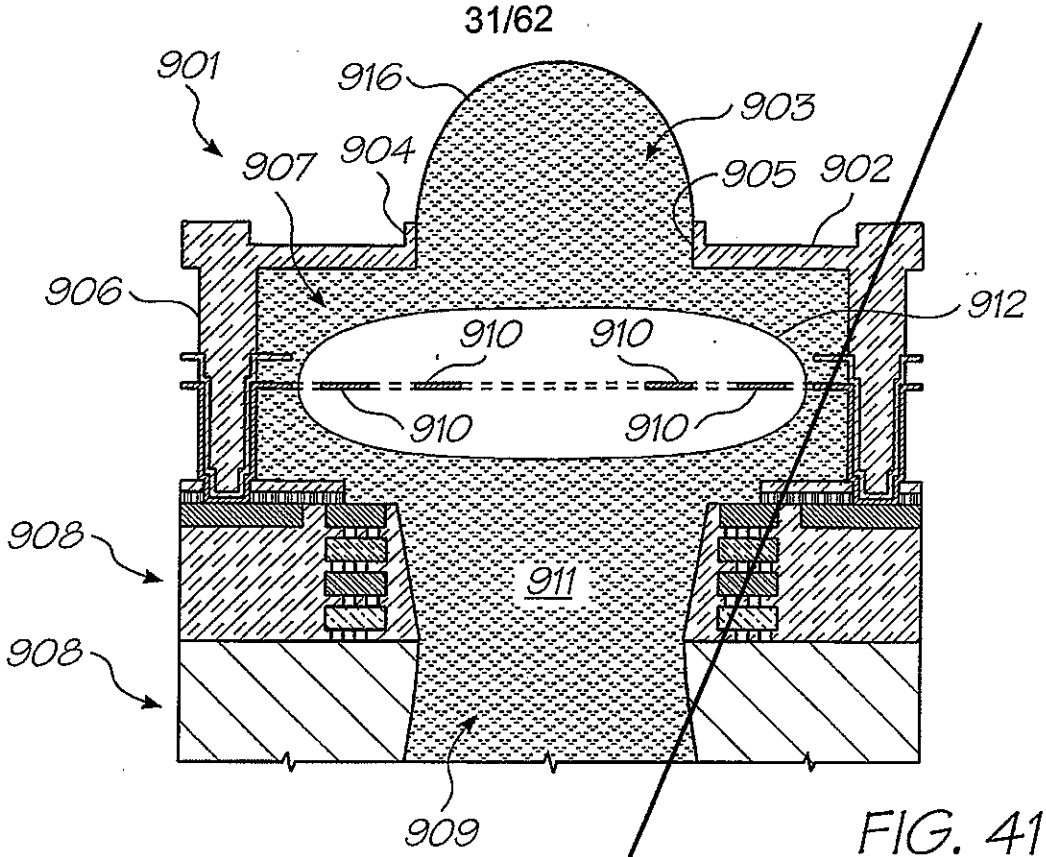
901
916
903
907
904
905
902
906
912
910
910
910
910
908
911
908
909

FIG. 41

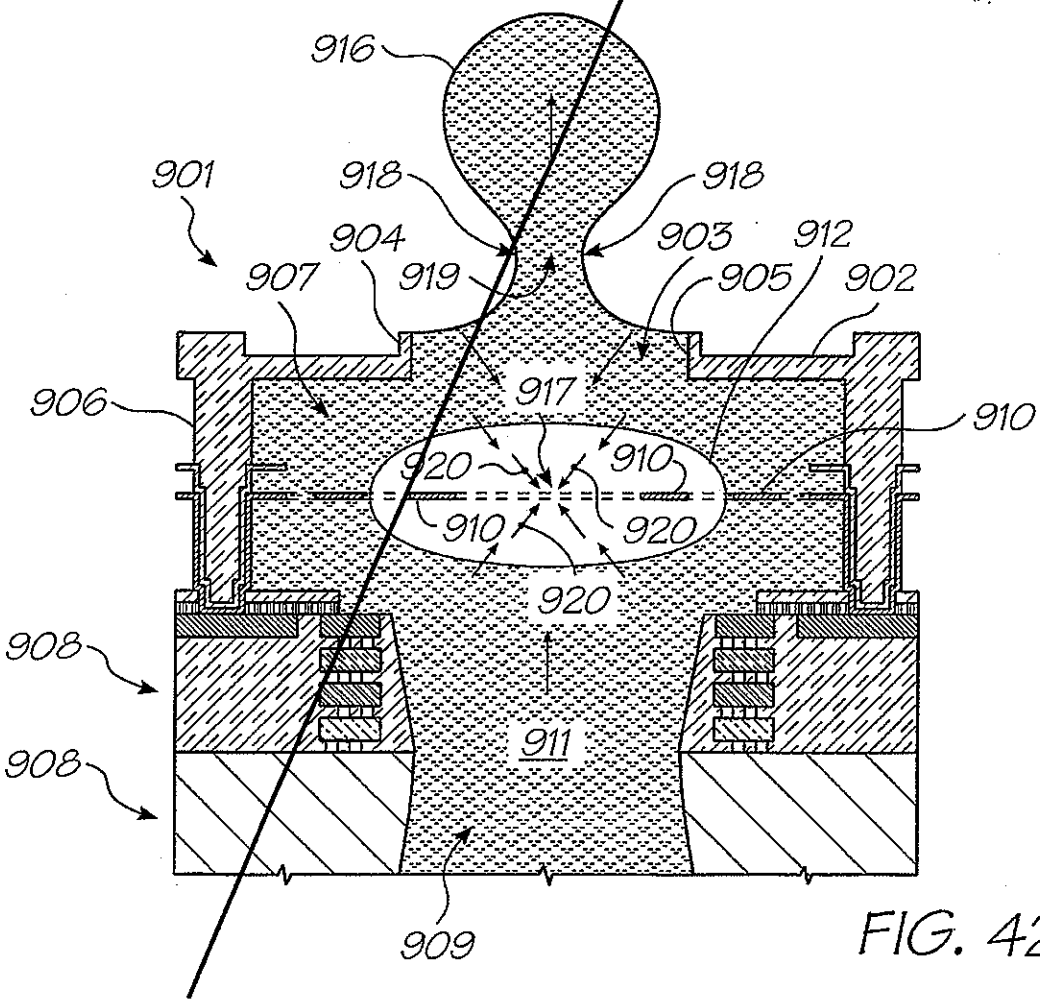
916
901
918
918
904
903
912
907
919
905
902
917
906
910
920
910
910
920
920
908
911
908
909

FIG. 42

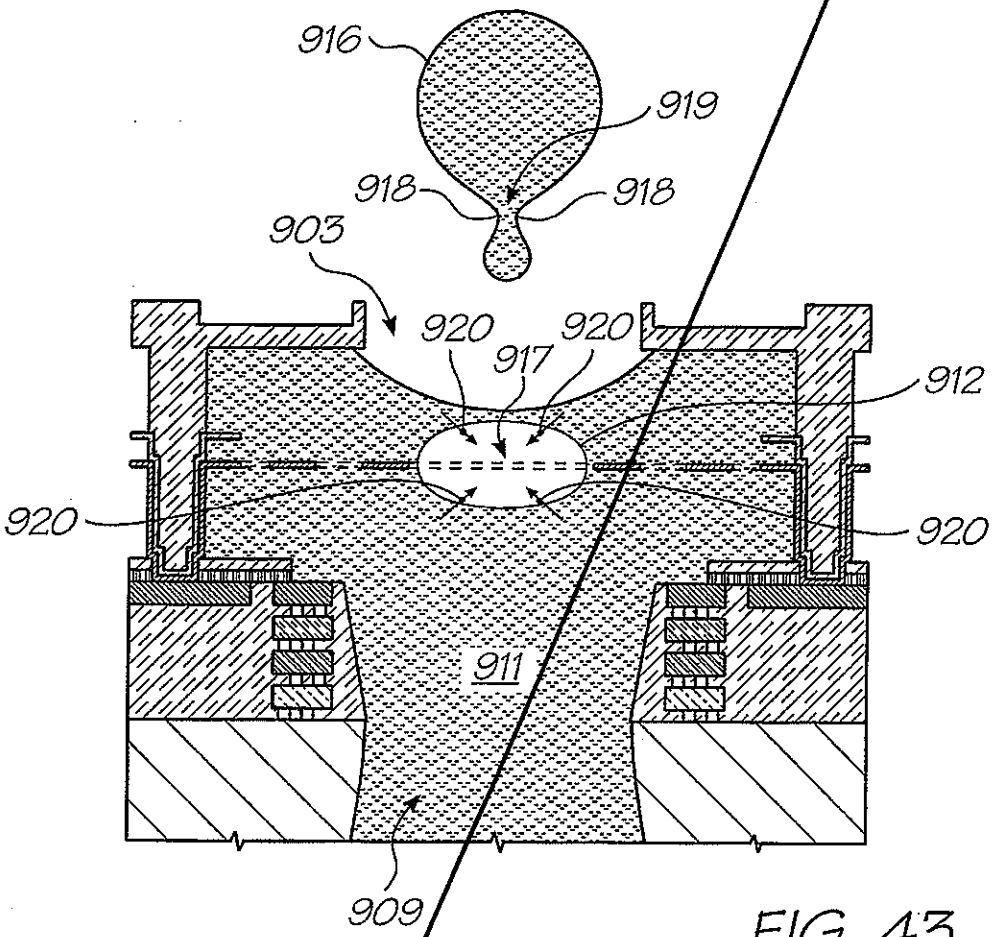

FIG. 43

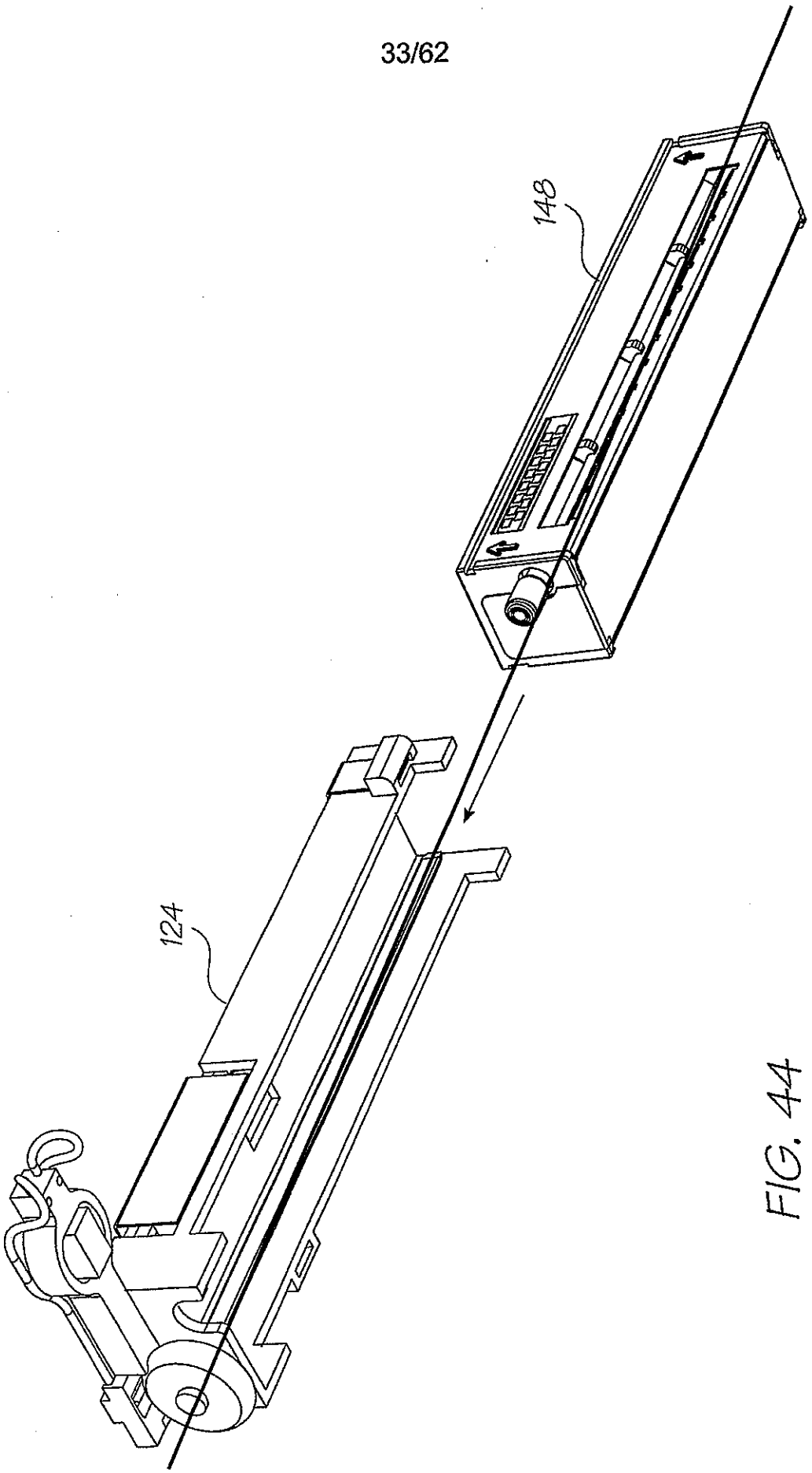

FIG. 44

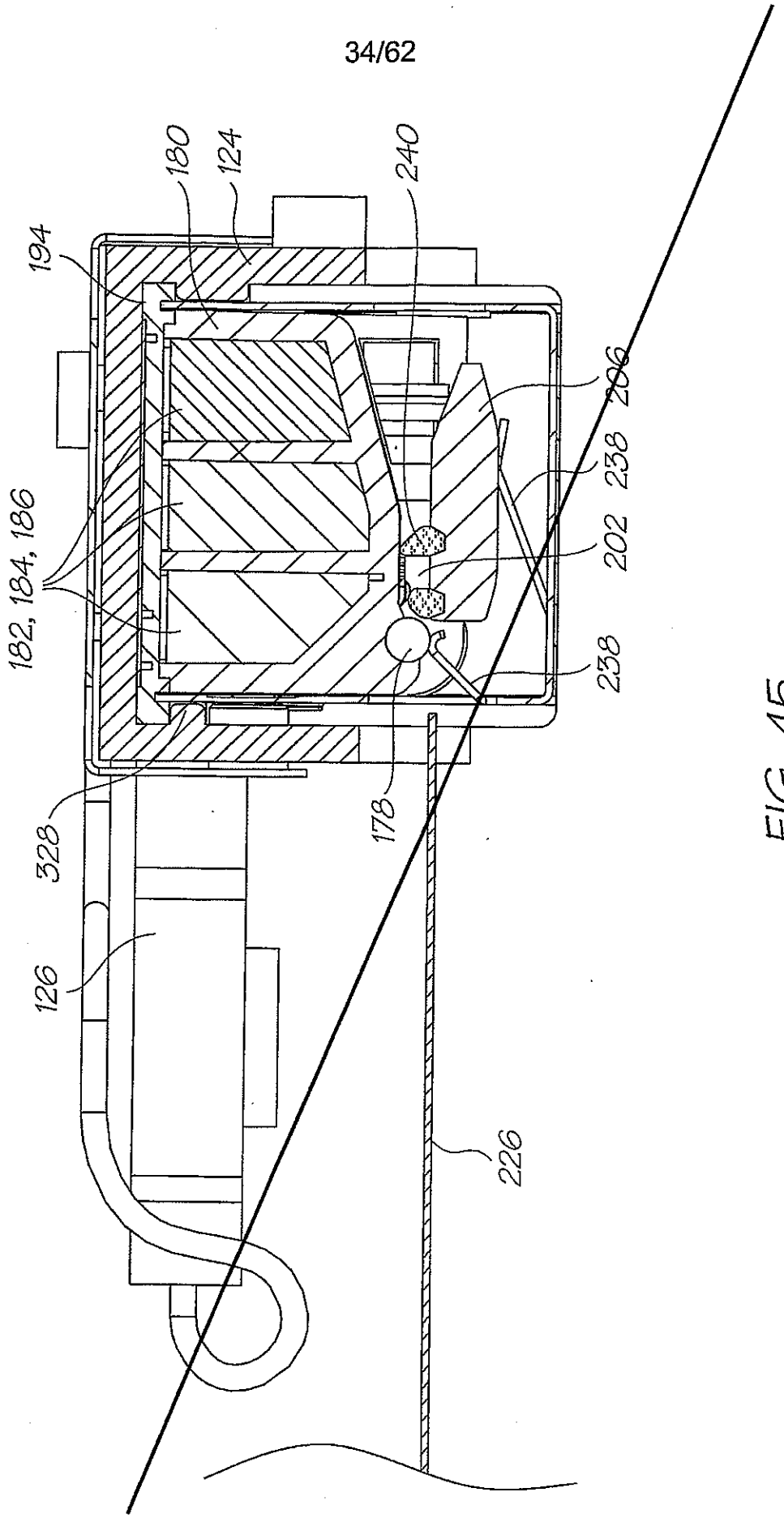

FIG. 45

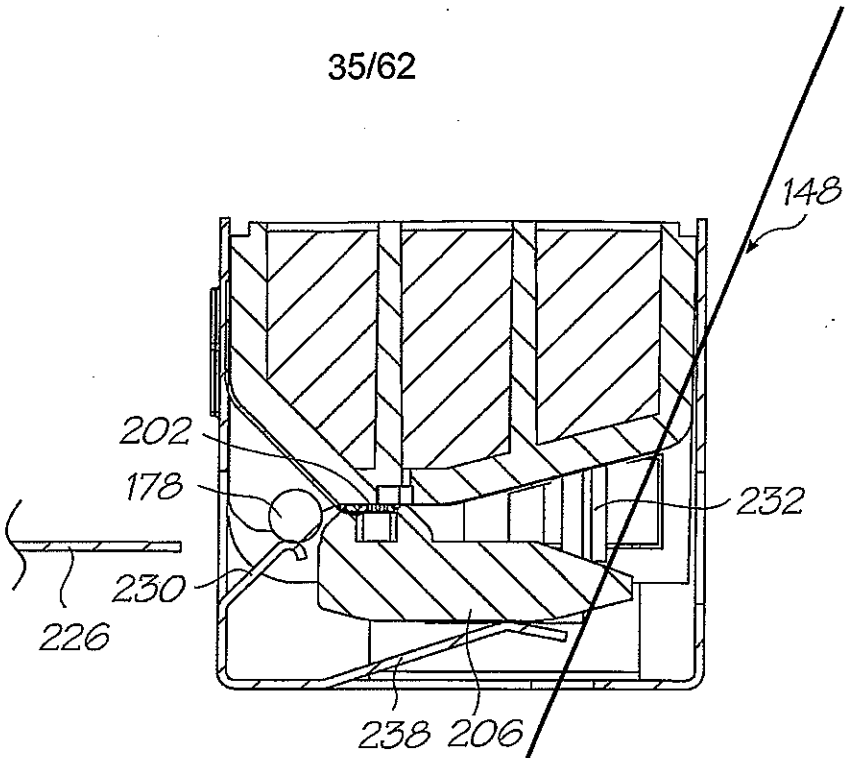

FIG. 46

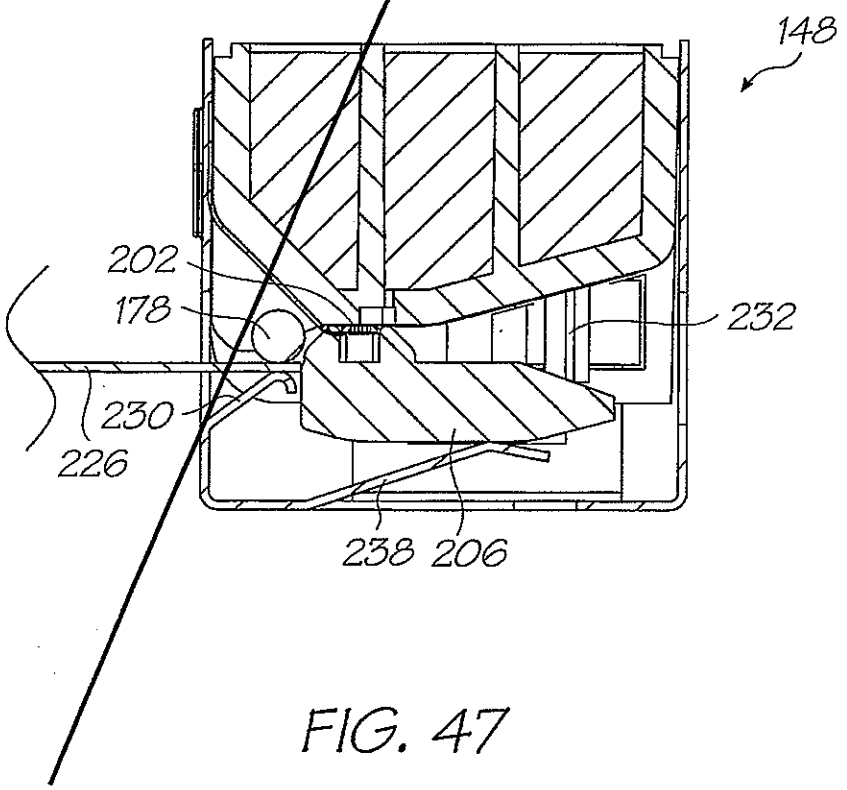

FIG. 47

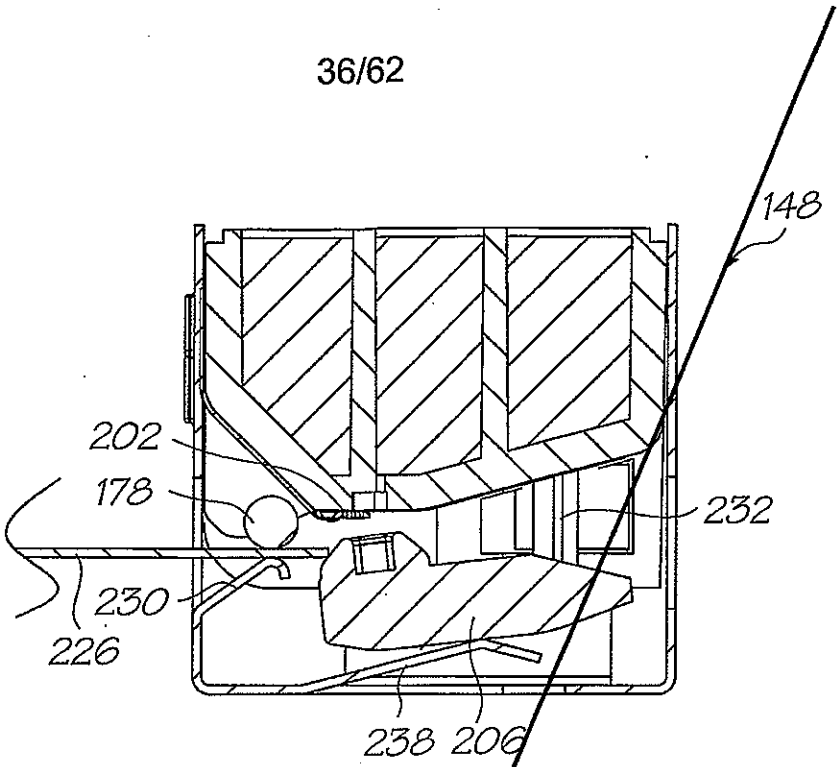

FIG. 48

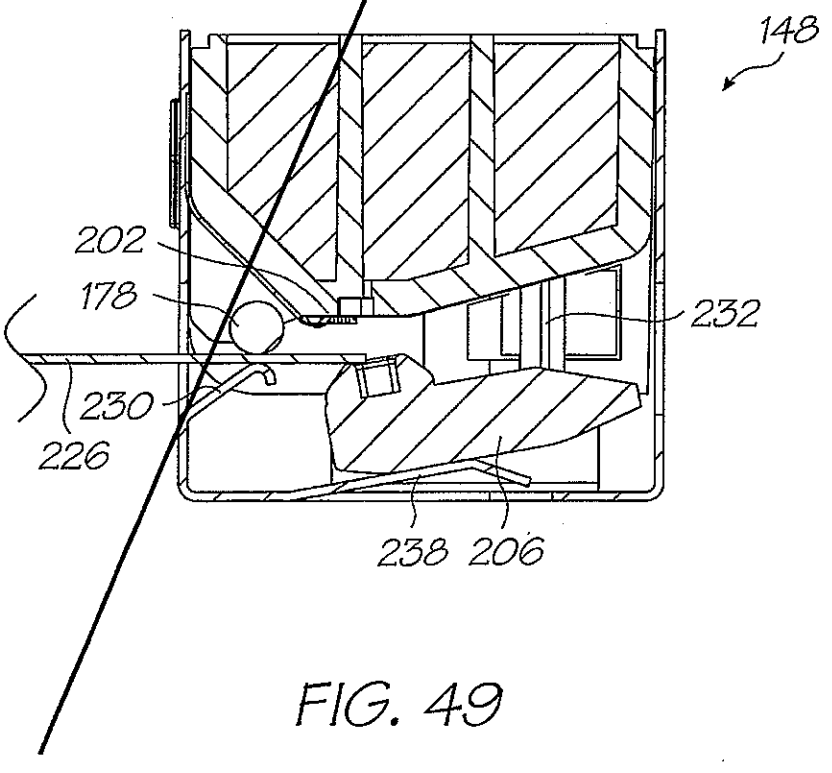

FIG. 49

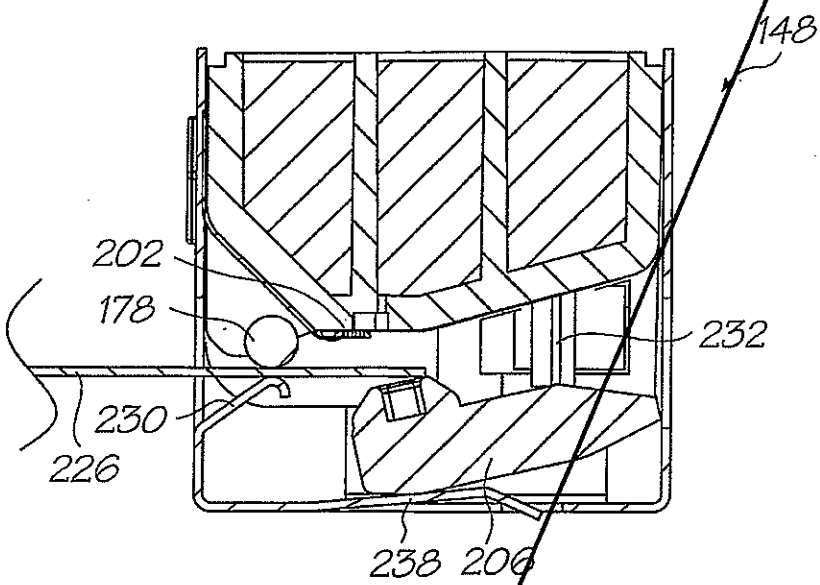

FIG. 50

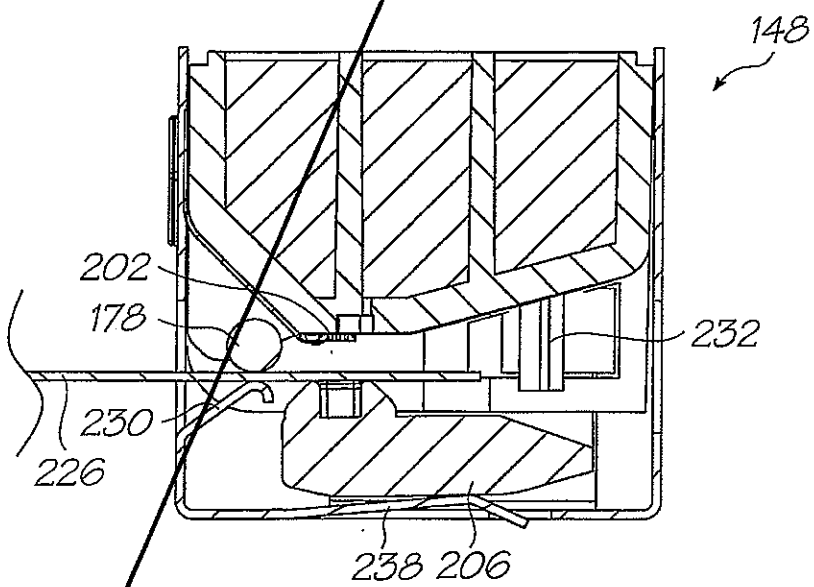

FIG. 51

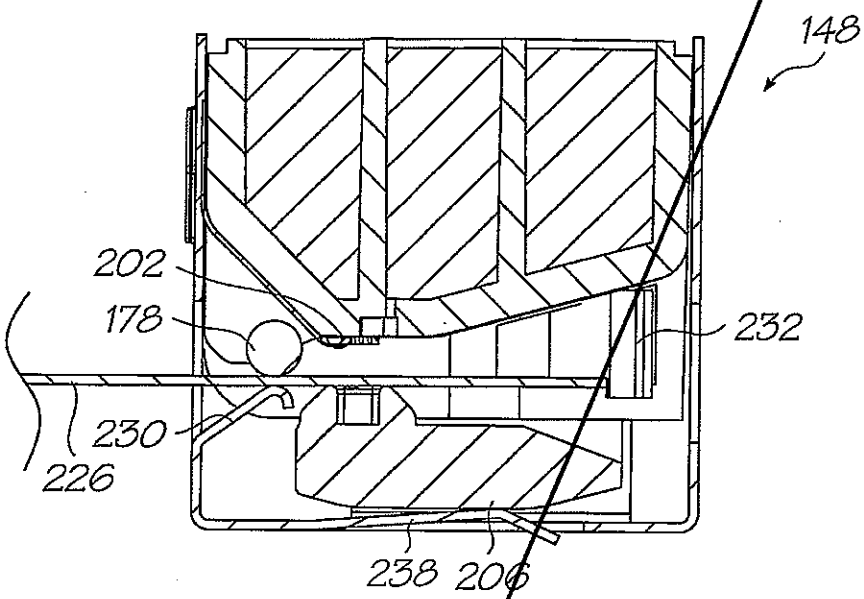

FIG. 52

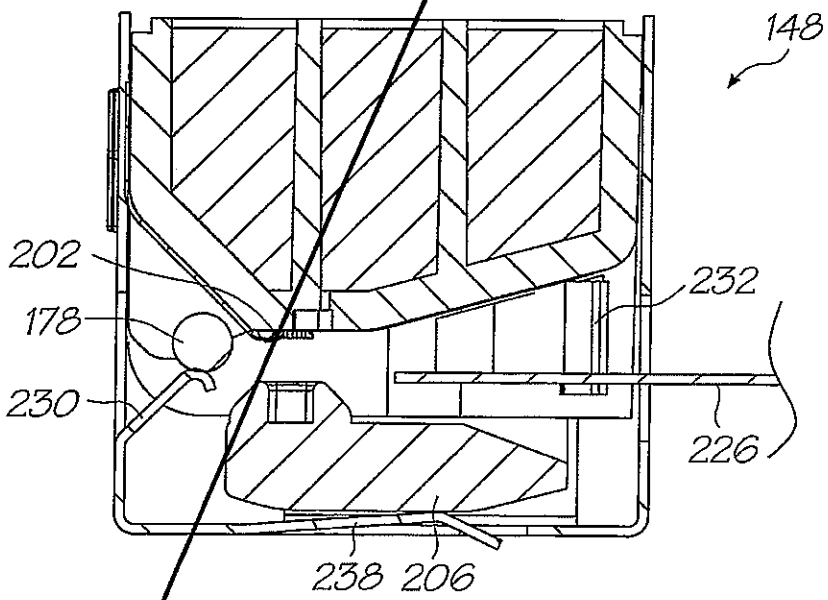

FIG. 53

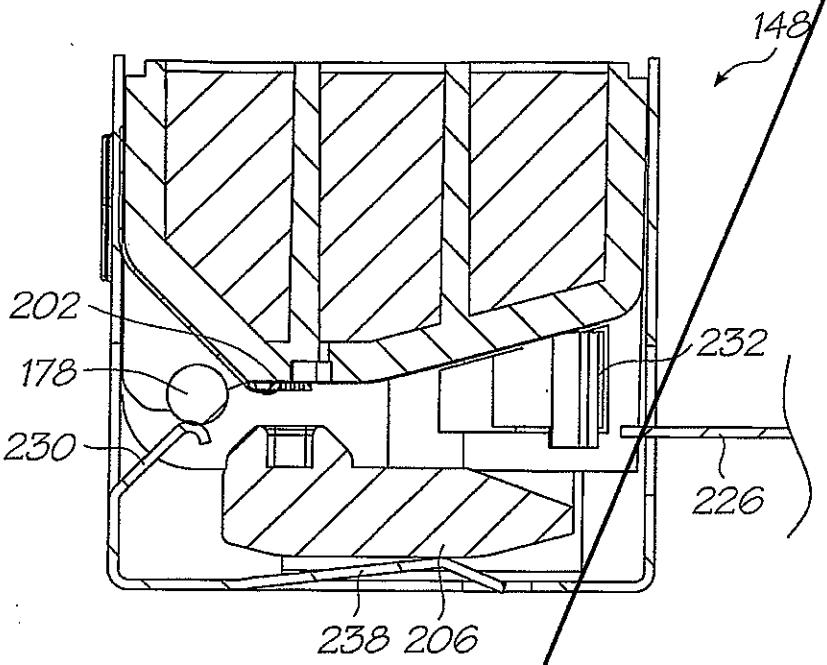

FIG. 54

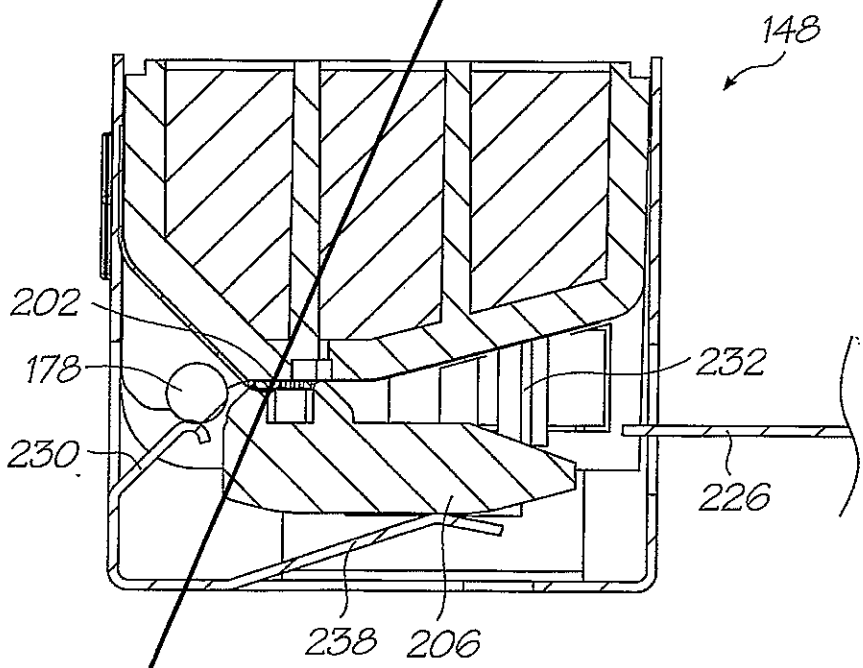

FIG. 55

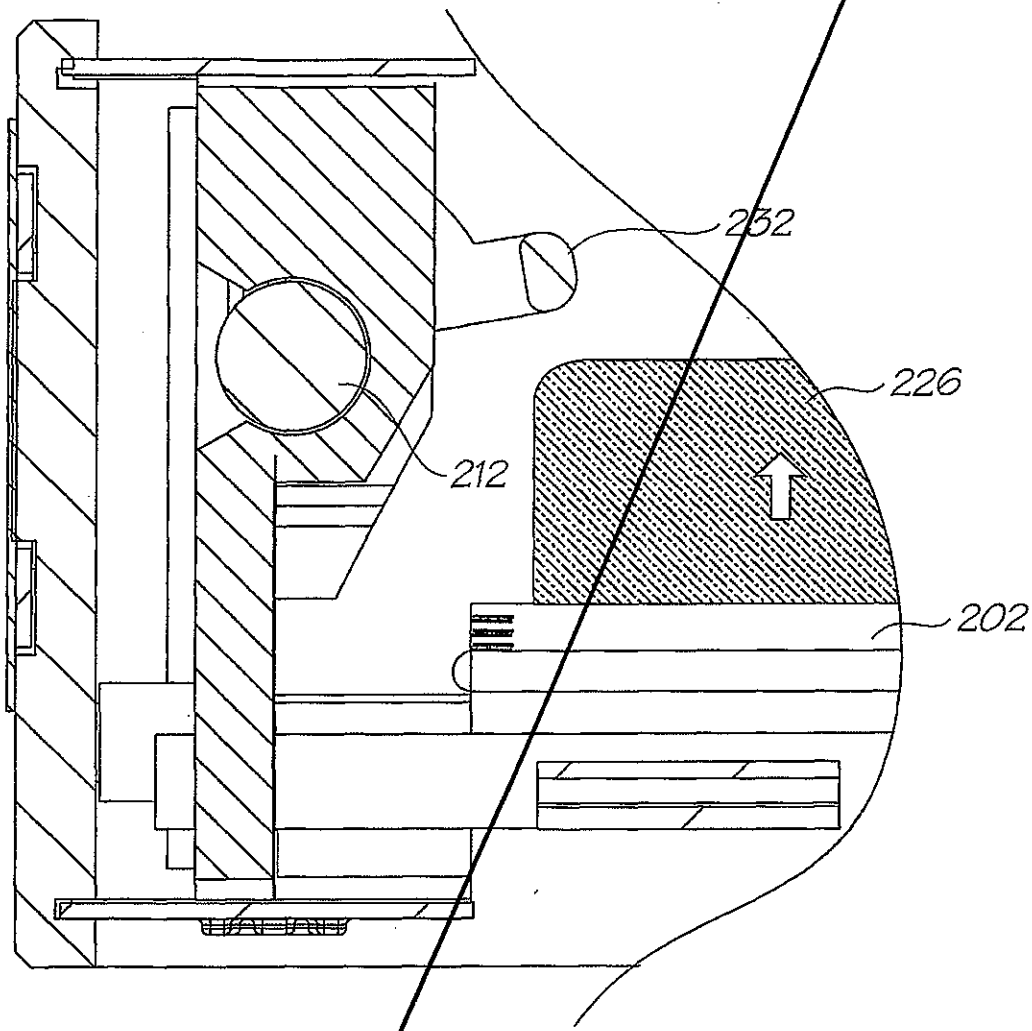

FIG. 56

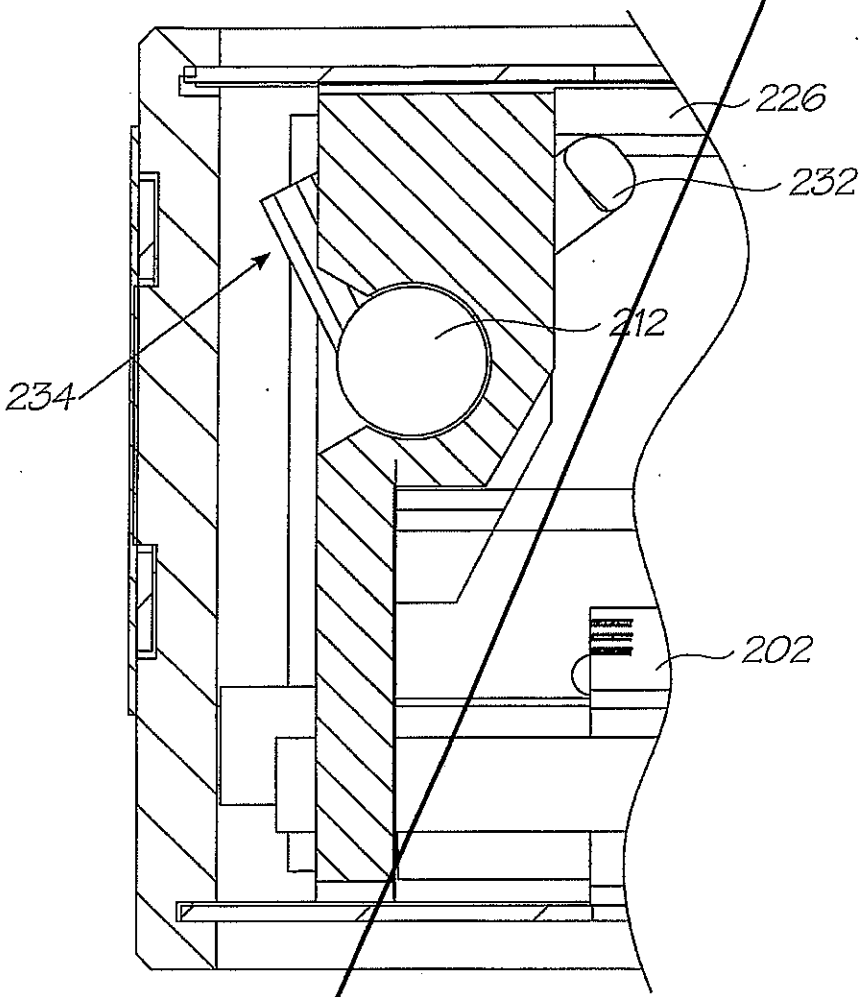

FIG. 57

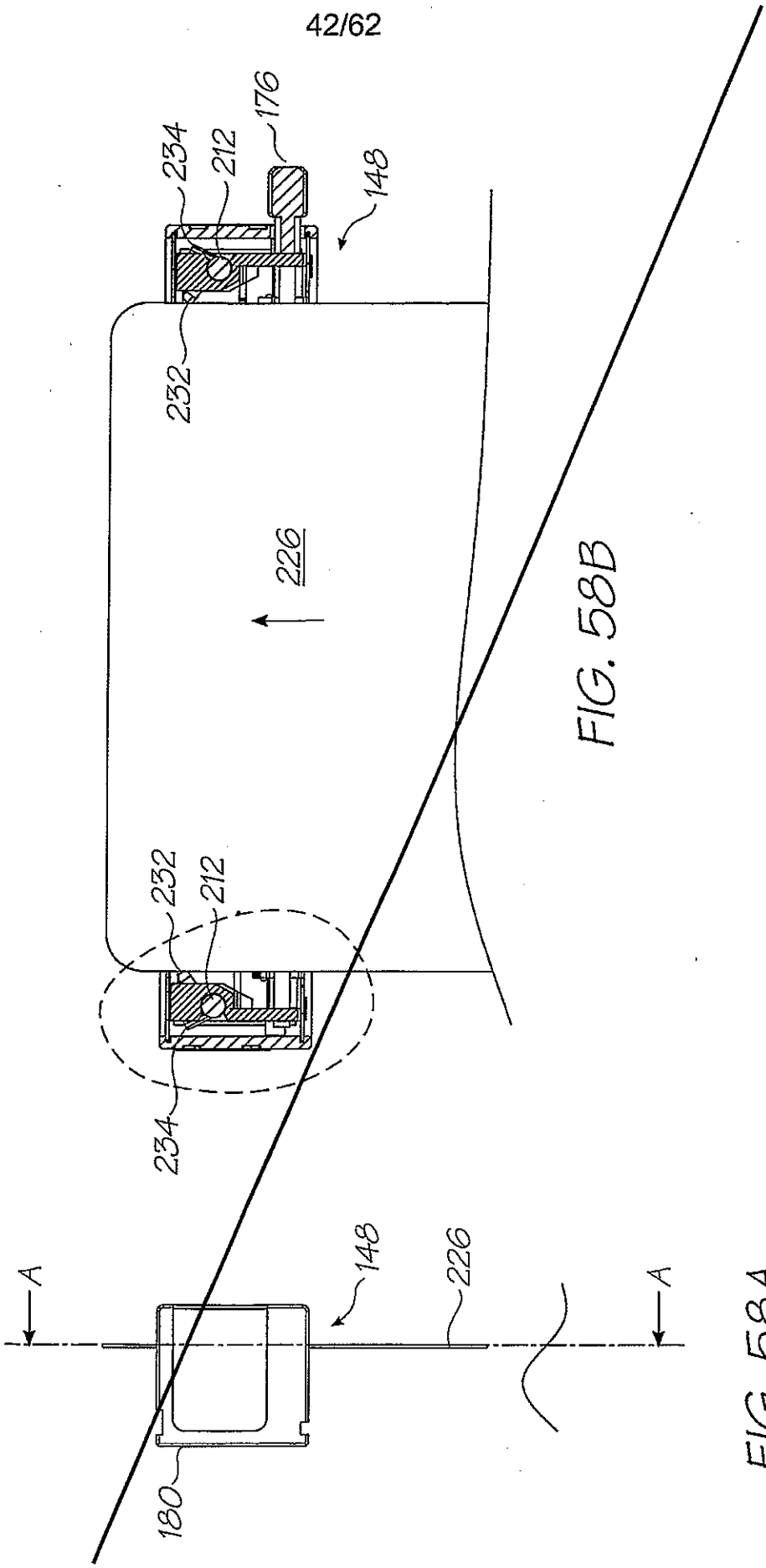

FIG. 58B

FIG. 58A

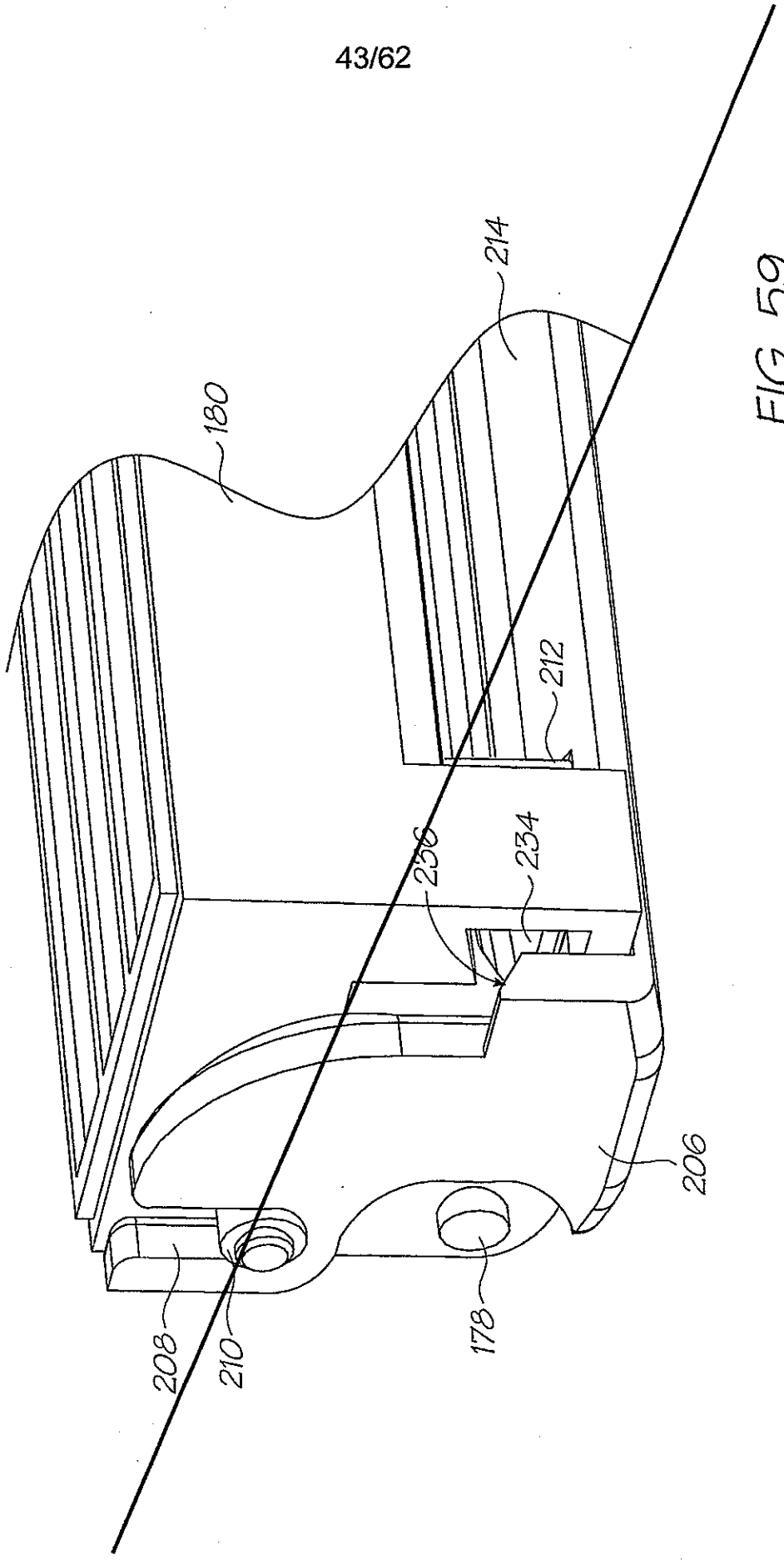

FIG. 59

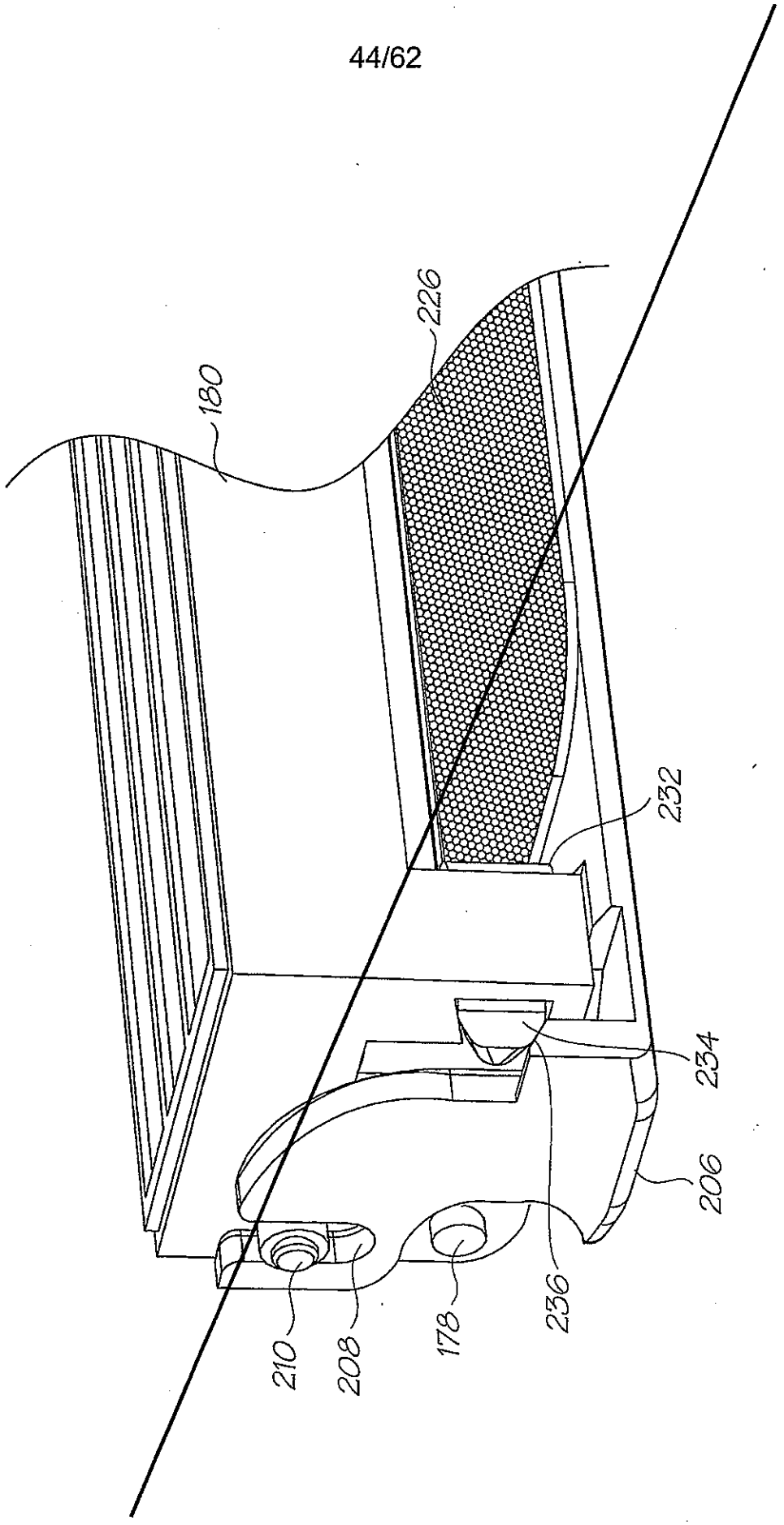

FIG. 60

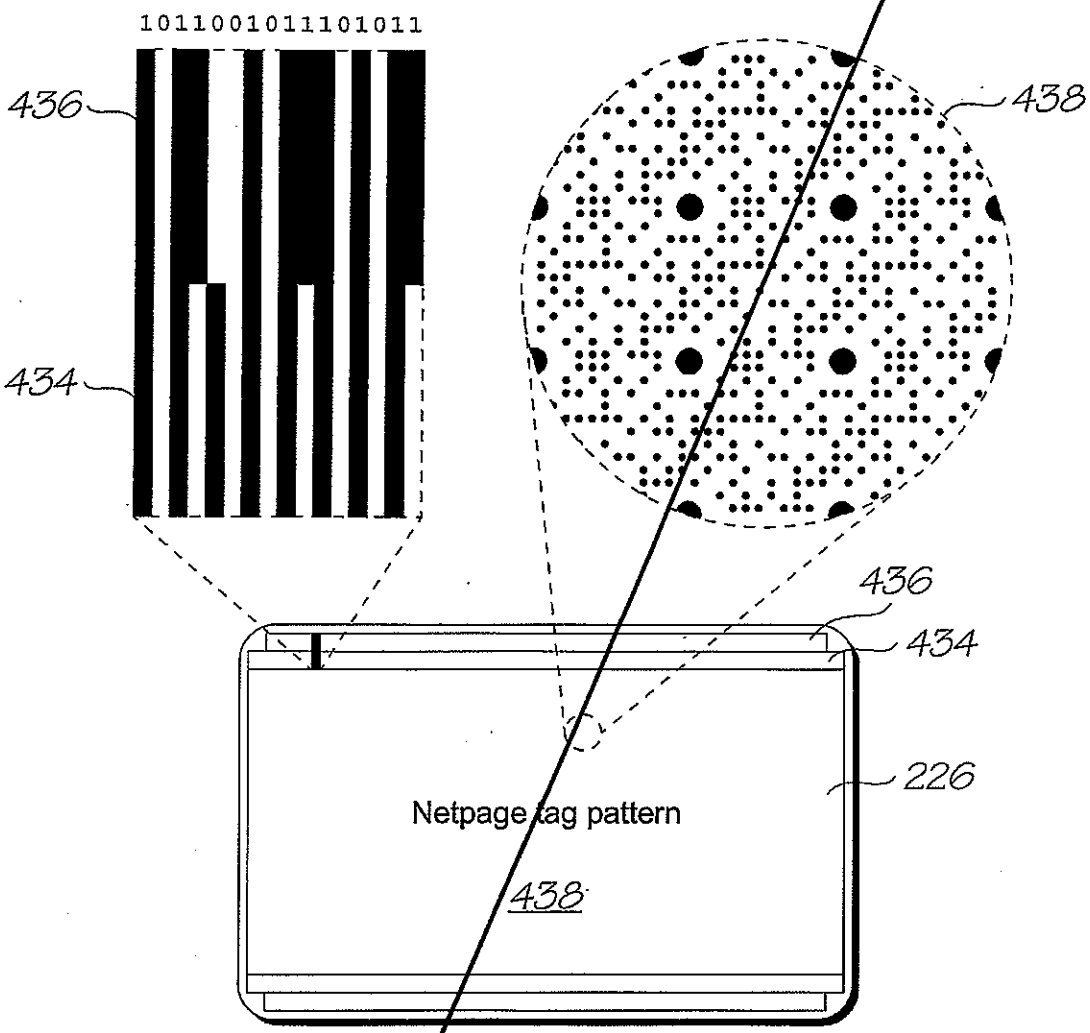
1011001011101011
436
434
438
436
434
226
Netpage tag pattern
438

FIG. 61

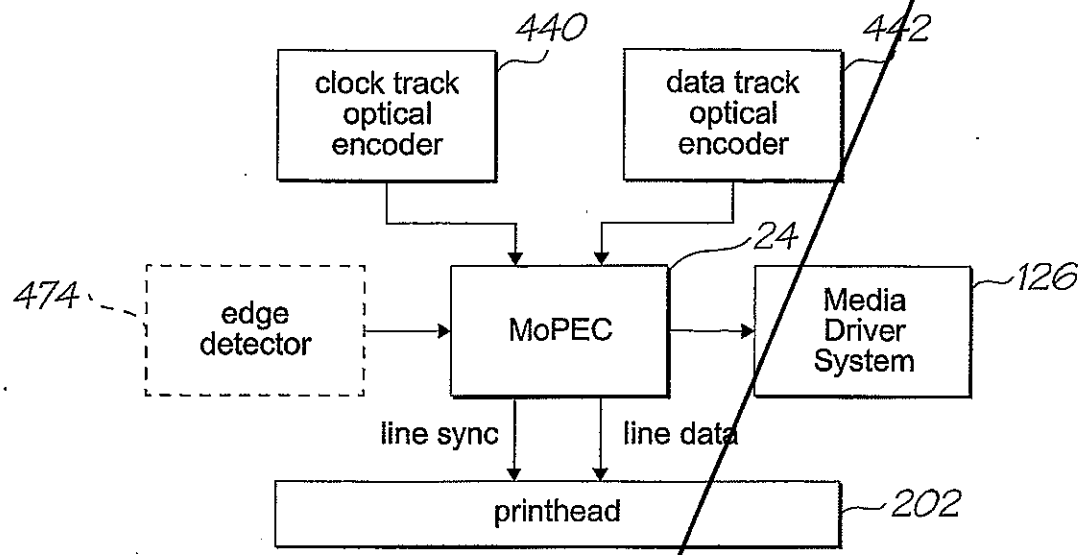
440
clock track optical encoder
442
data track optical encoder
24
474
edge detector
MoPEC
Media Driver System
126
line sync
line data
printhead
202

FIG. 62

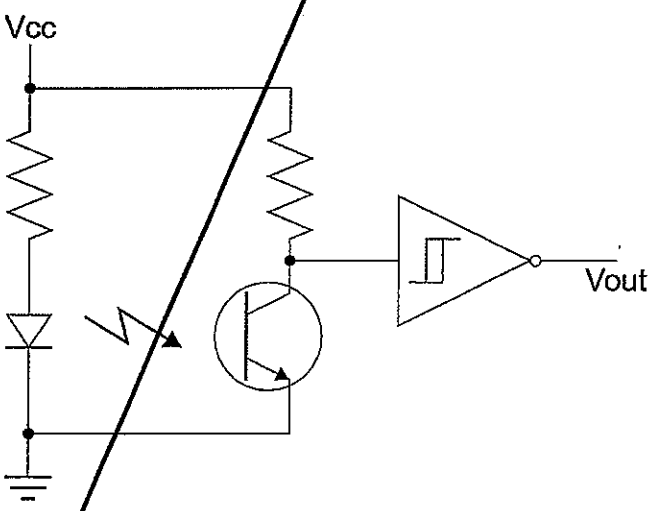
Vcc
Vout

FIG. 63

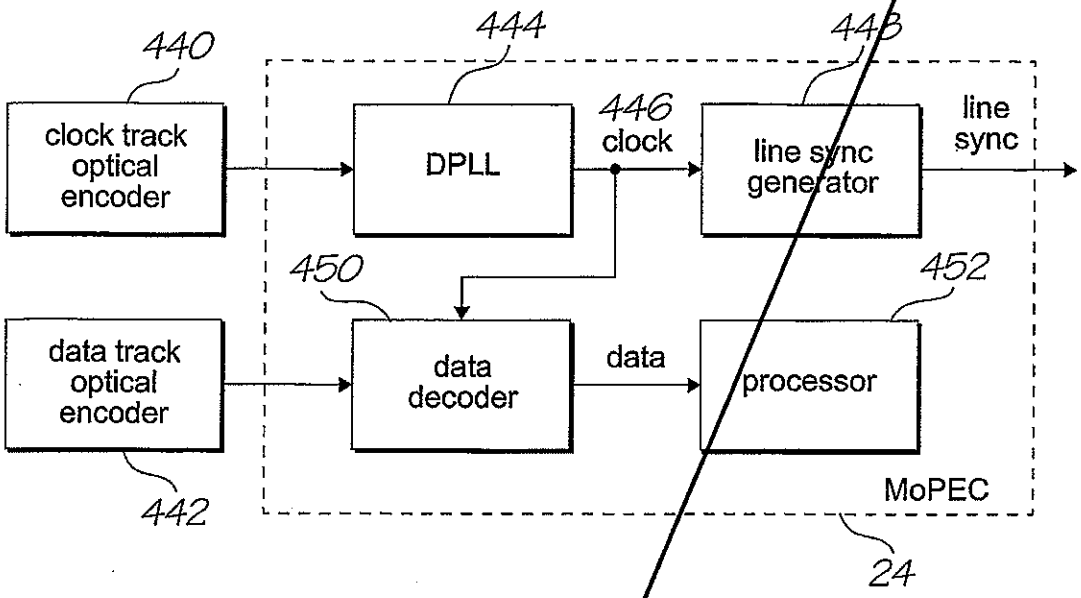
440
444
448
clock track optical encoder
DPLL
446 clock
line sync generator
line sync
450
452
data track optical encoder
data decoder
data
processor
MoPEC
442
24

FIG. 64

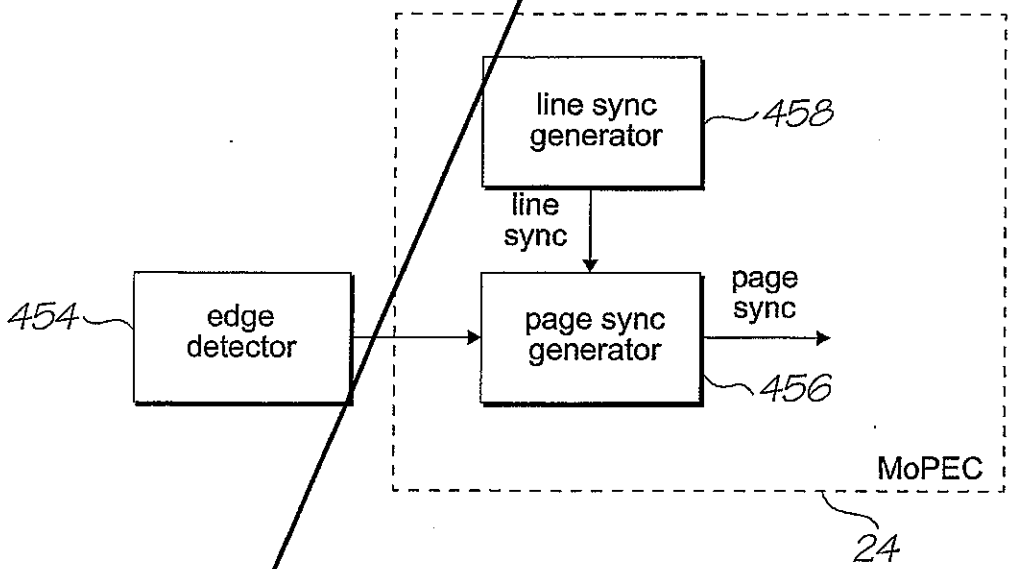
line sync generator
458
line sync
454
edge detector
page sync generator
page sync
456
MoPEC
24

FIG. 65

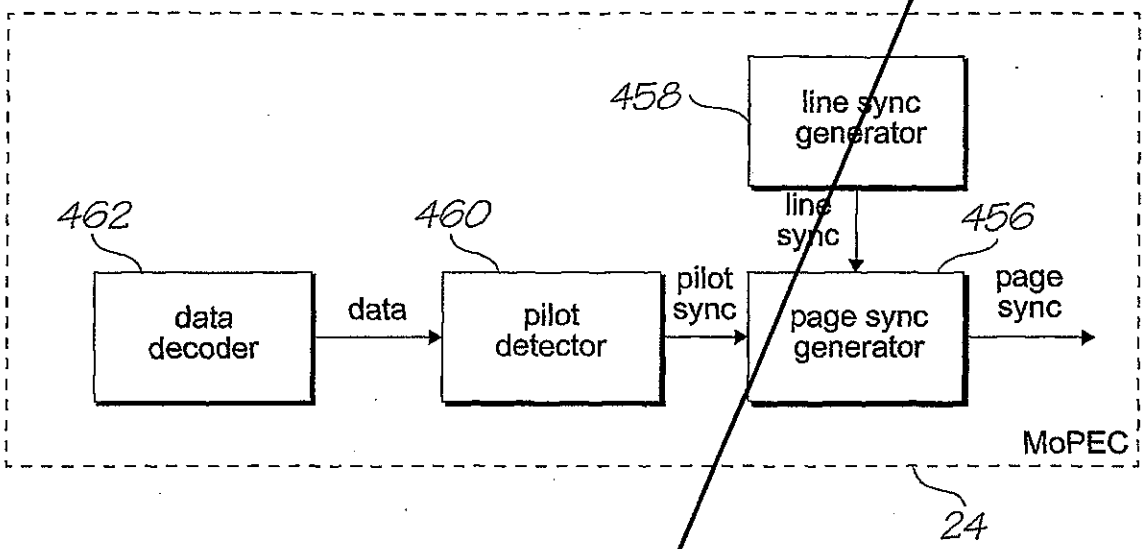
458
line sync generator
462
460
line sync
456
data decoder
data
pilot detector
pilot sync
page sync generator
page sync
MoPEC
24

FIG. 66

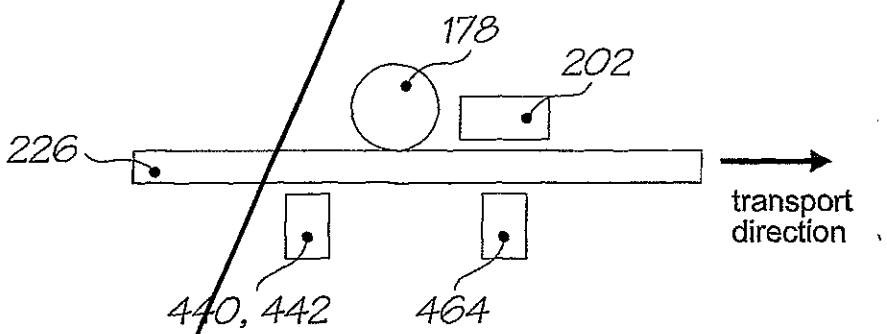
178
202
226
transport direction
440, 442
464

FIG. 67

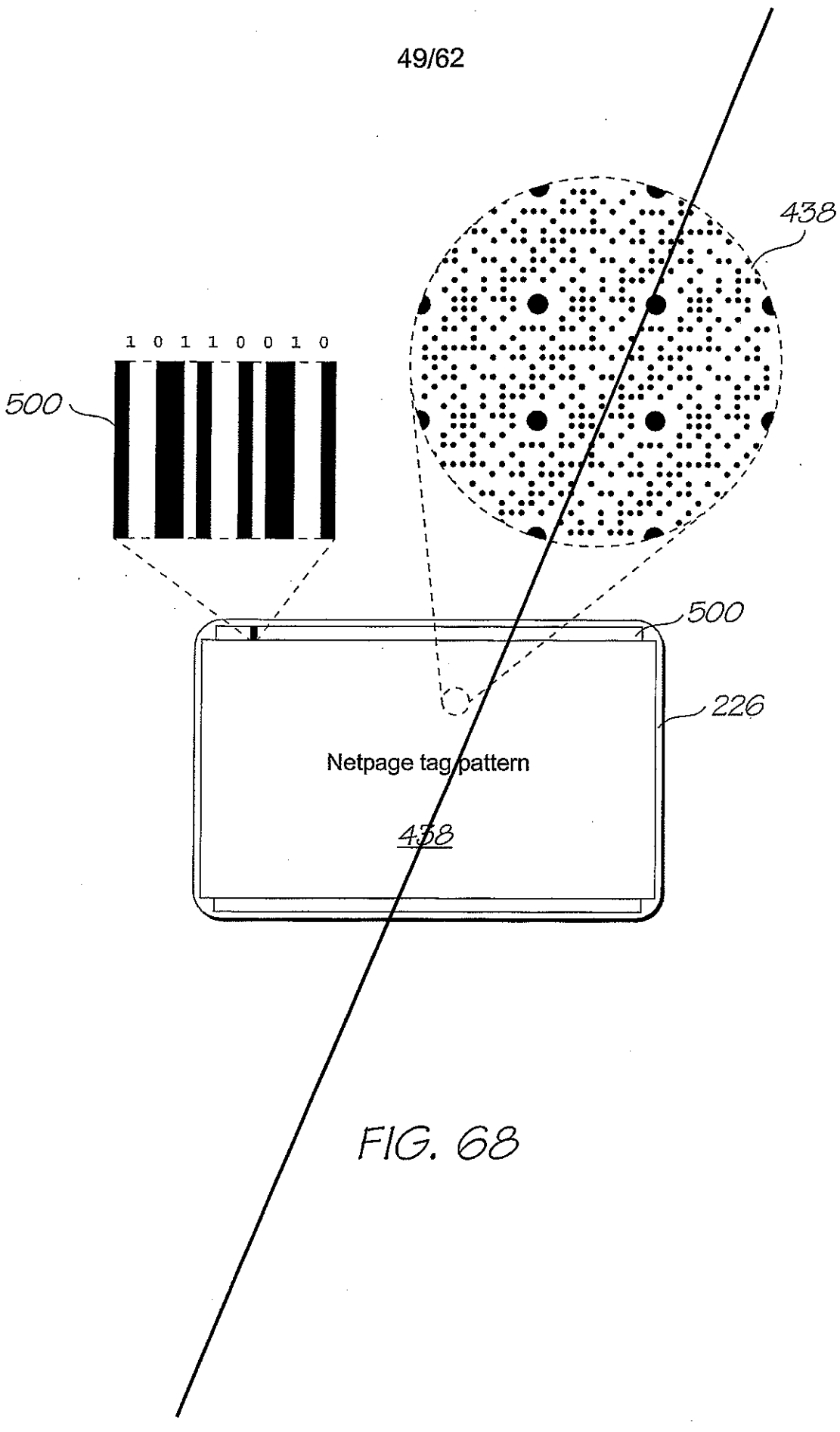

FIG. 68

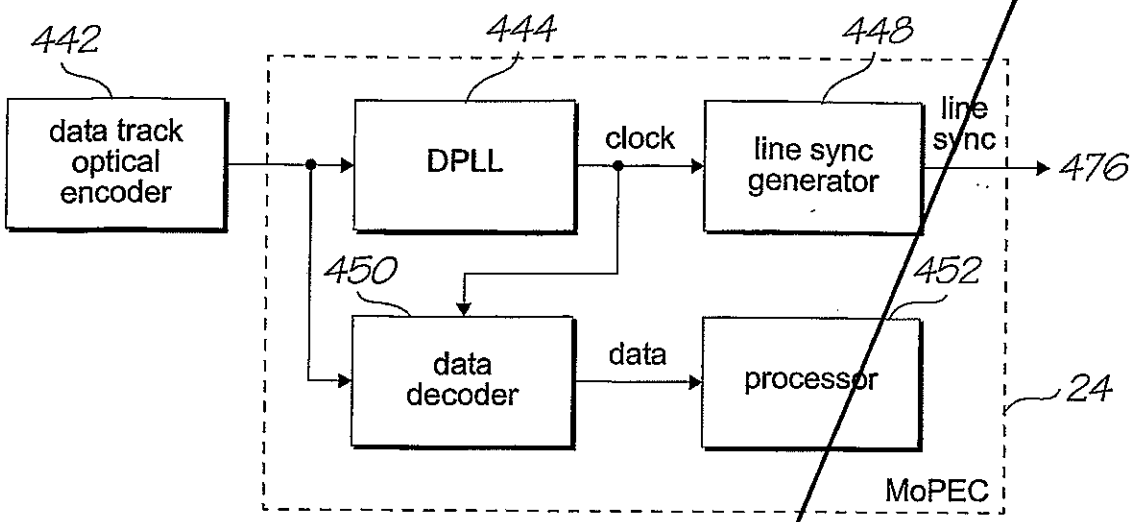
442
data track optical encoder
444
DPLL
clock
448
line sync generator
line sync
476
450
data decoder
data
452
processor
24
MoPEC

FIG. 69

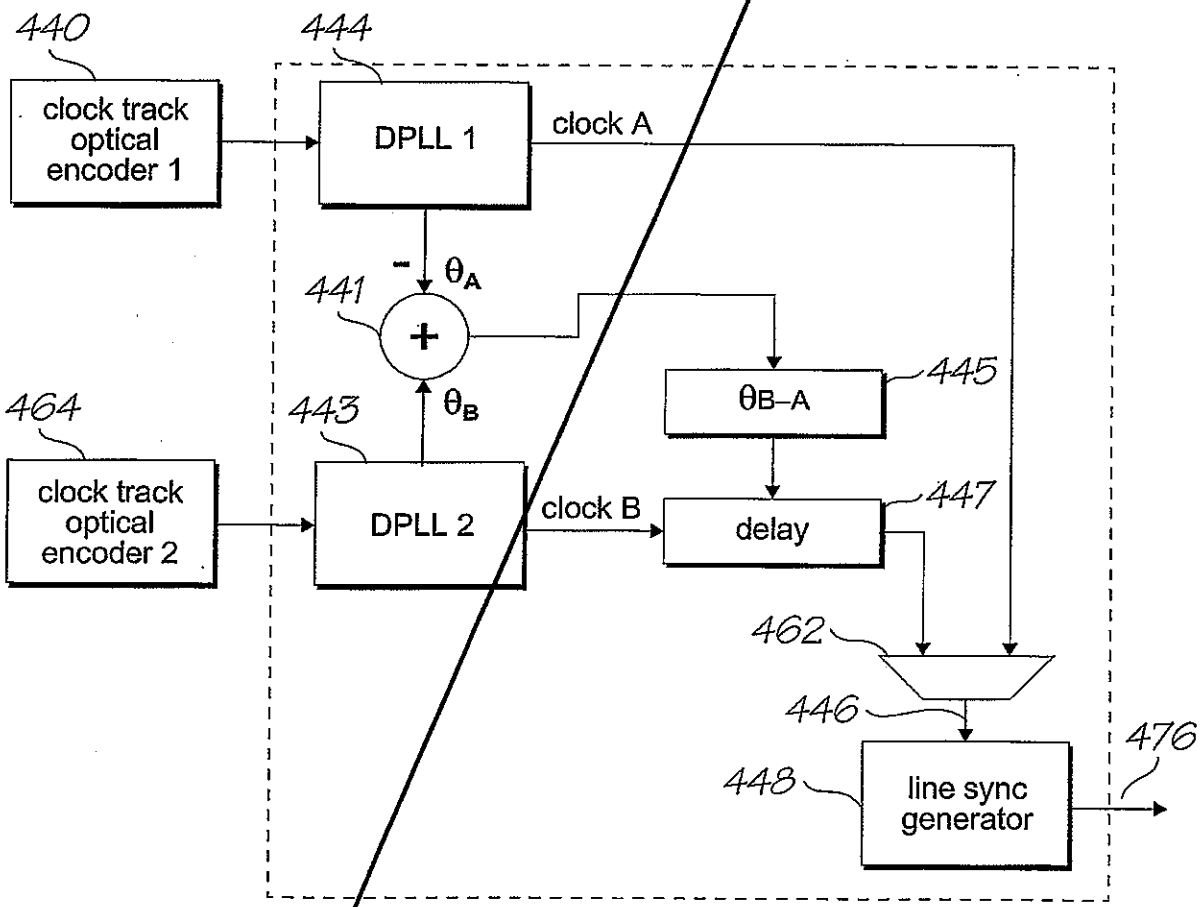
440
clock track optical encoder 1
444
DPLL 1
clock A
-
θA
441
+
θB
θB–A
445
464
clock track optical encoder 2
443
DPLL 2
clock B
delay
447
462
446
448
line sync generator
476

FIG. 70

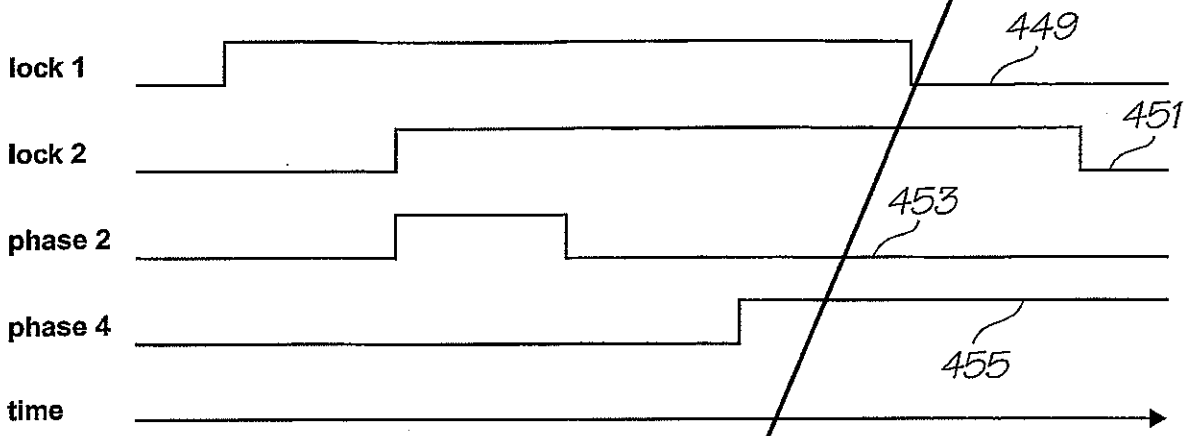

FIG. 71

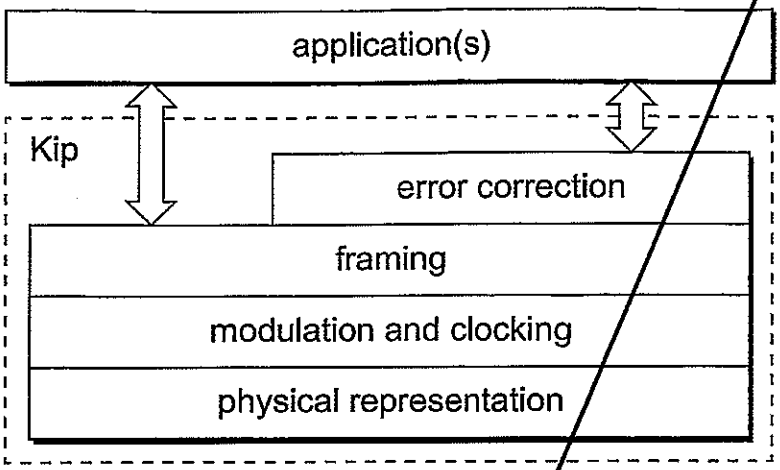

FIG. 72

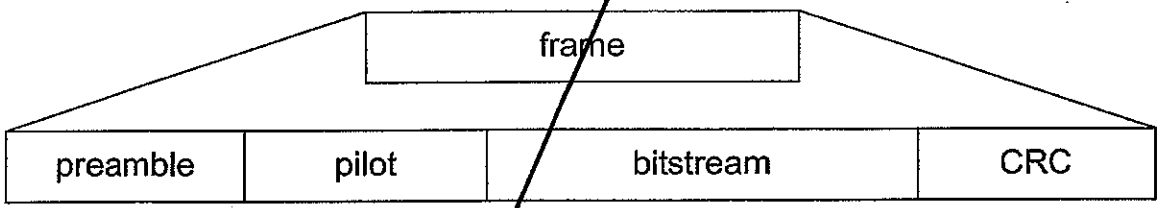

FIG. 73

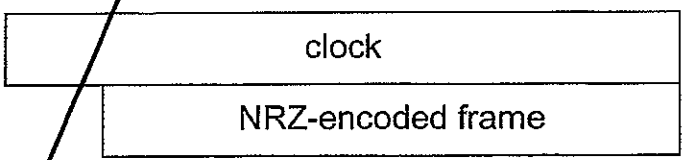

FIG. 74

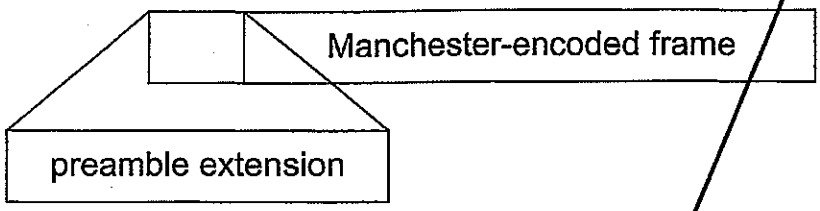

FIG. 75

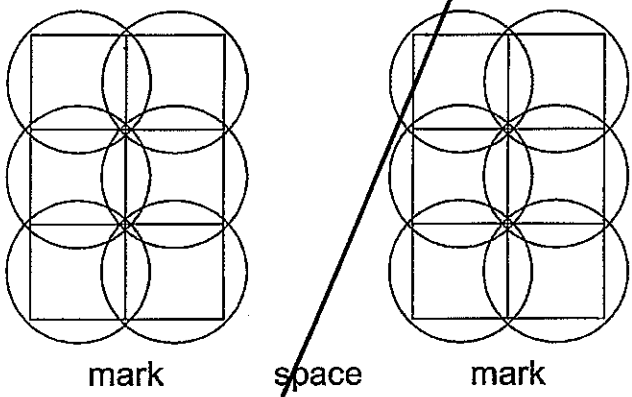

FIG. 76

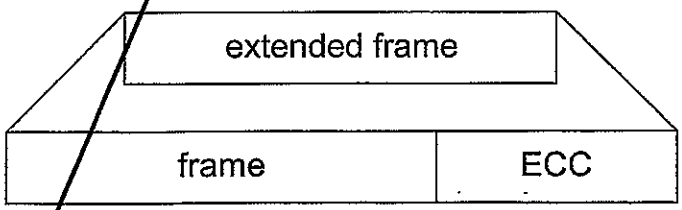

FIG. 77

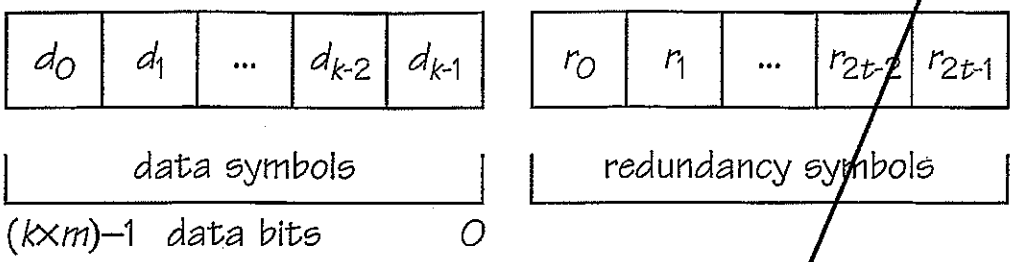

FIG. 78

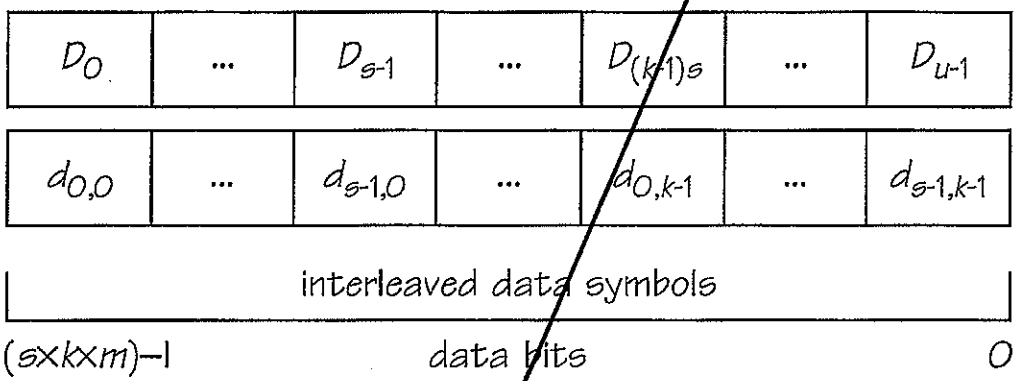

FIG. 79

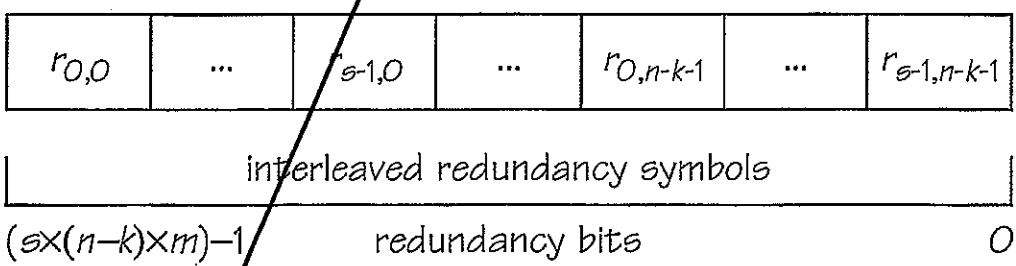

FIG. 80

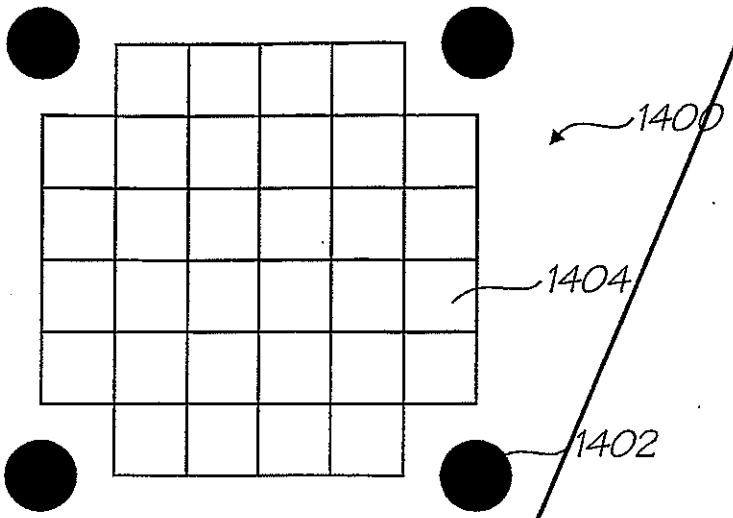

FIG. 81

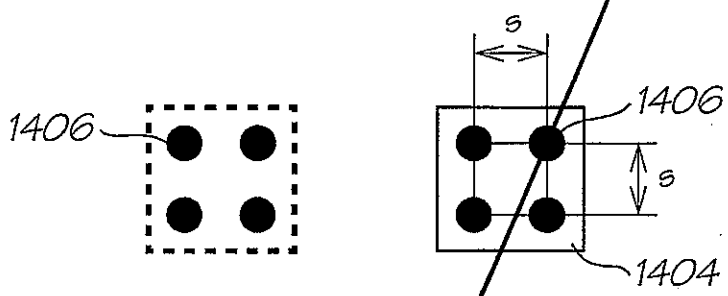

FIG. 82

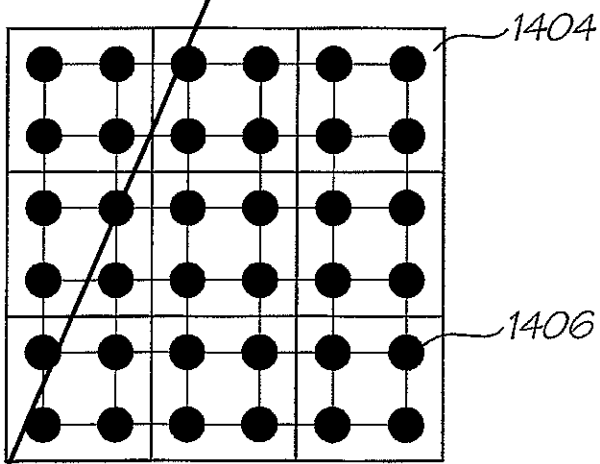

FIG. 83

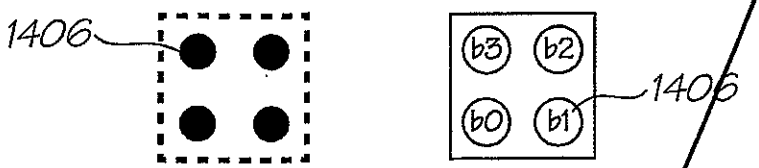

FIG. 84

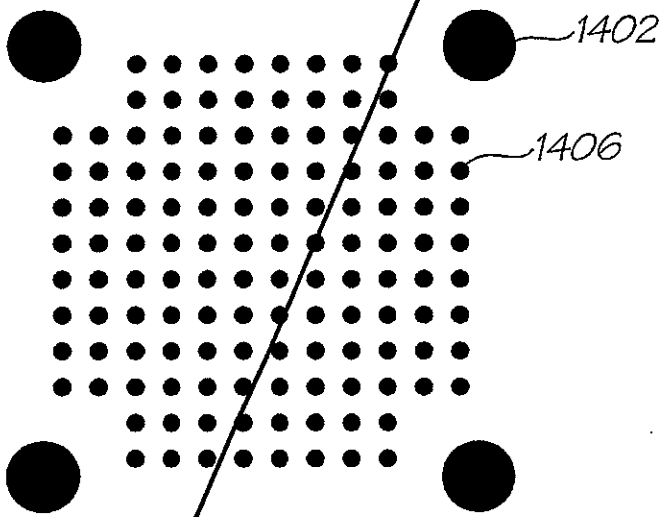

FIG. 85

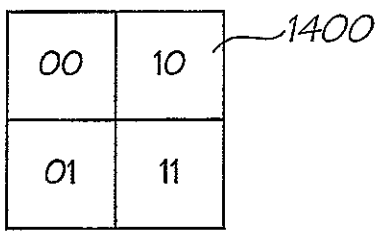

FIG. 86

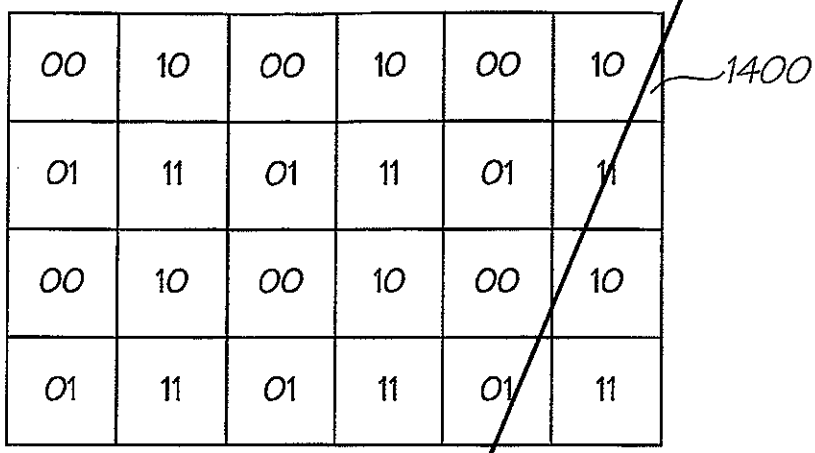
00 10 00 10 00 10
01 11 01 11 01 11
00 10 00 10 00 10
01 11 01 11 01 11
1400

FIG. 87

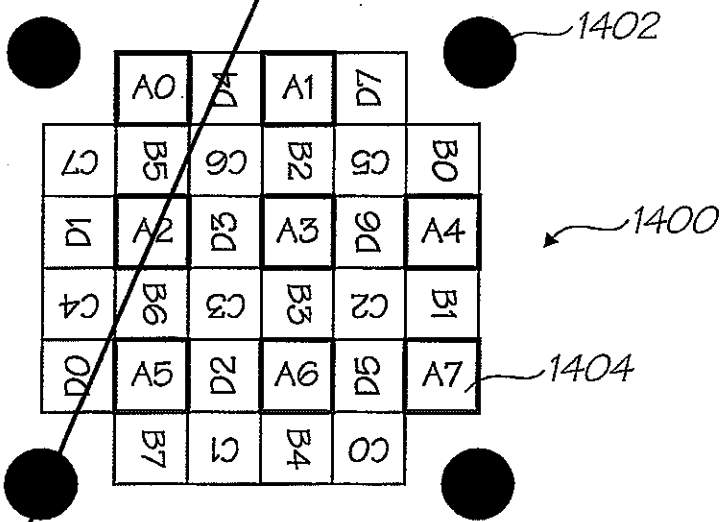
A0 D4 A1 D7
C7 B5 C6 B2 C5 B0
D1 A2 D3 A3 D6 A4
C4 B6 C3 B3 C2 B1
D0 A5 D2 A6 D5 A7
B7 C1 B4 C0
1402
1400
1404

FIG. 88

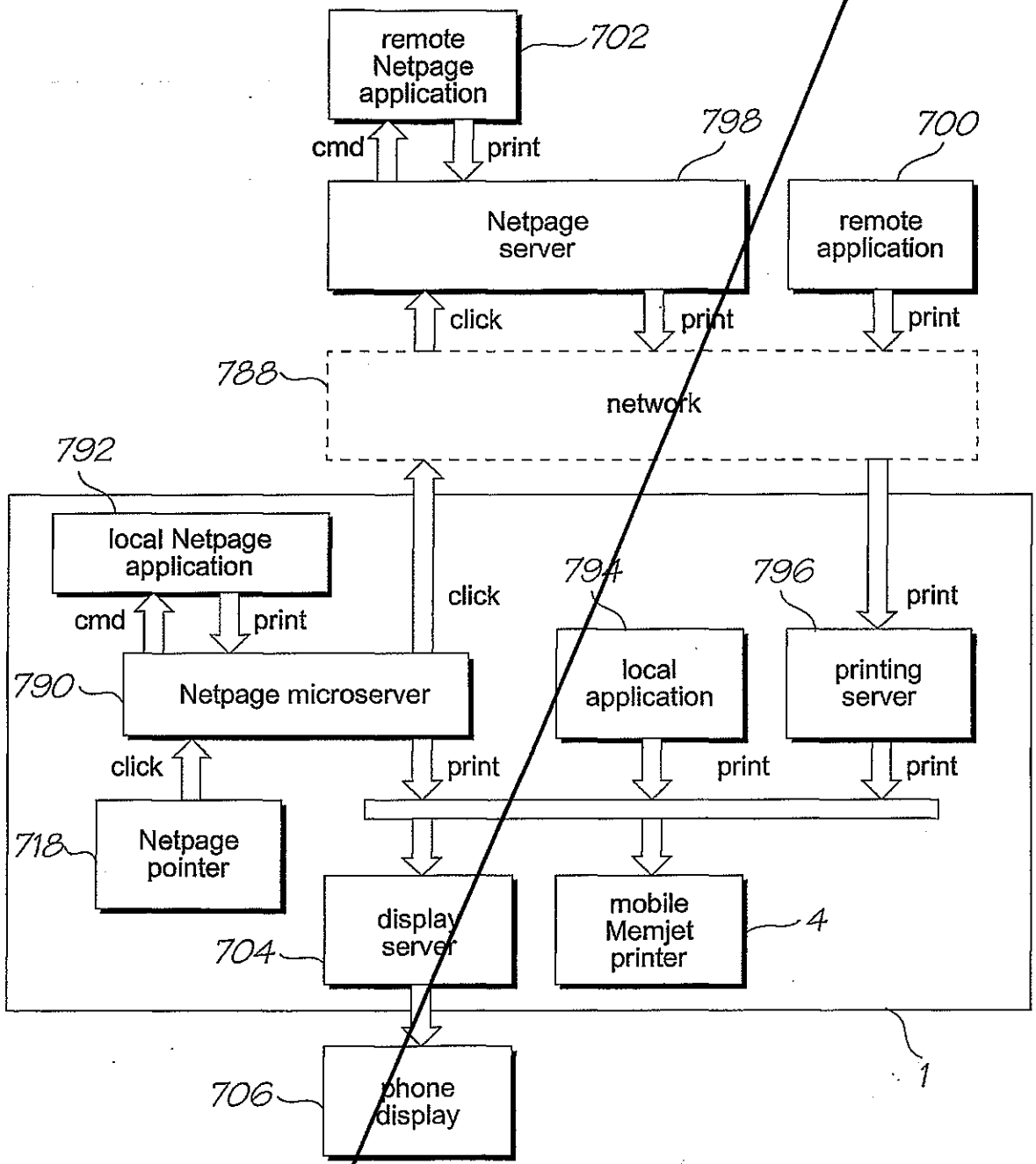
remote Netpage application
702
cmd
print
798
700
Netpage server
remote application
click
print
print
788
network
792
local Netpage application
cmd
print
click
794
796
print
790
Netpage microserver
local application
printing server
click
print
print
print
718
Netpage pointer
display server
704
mobile Memjet printer
4
1
706
phone display

FIG. 89

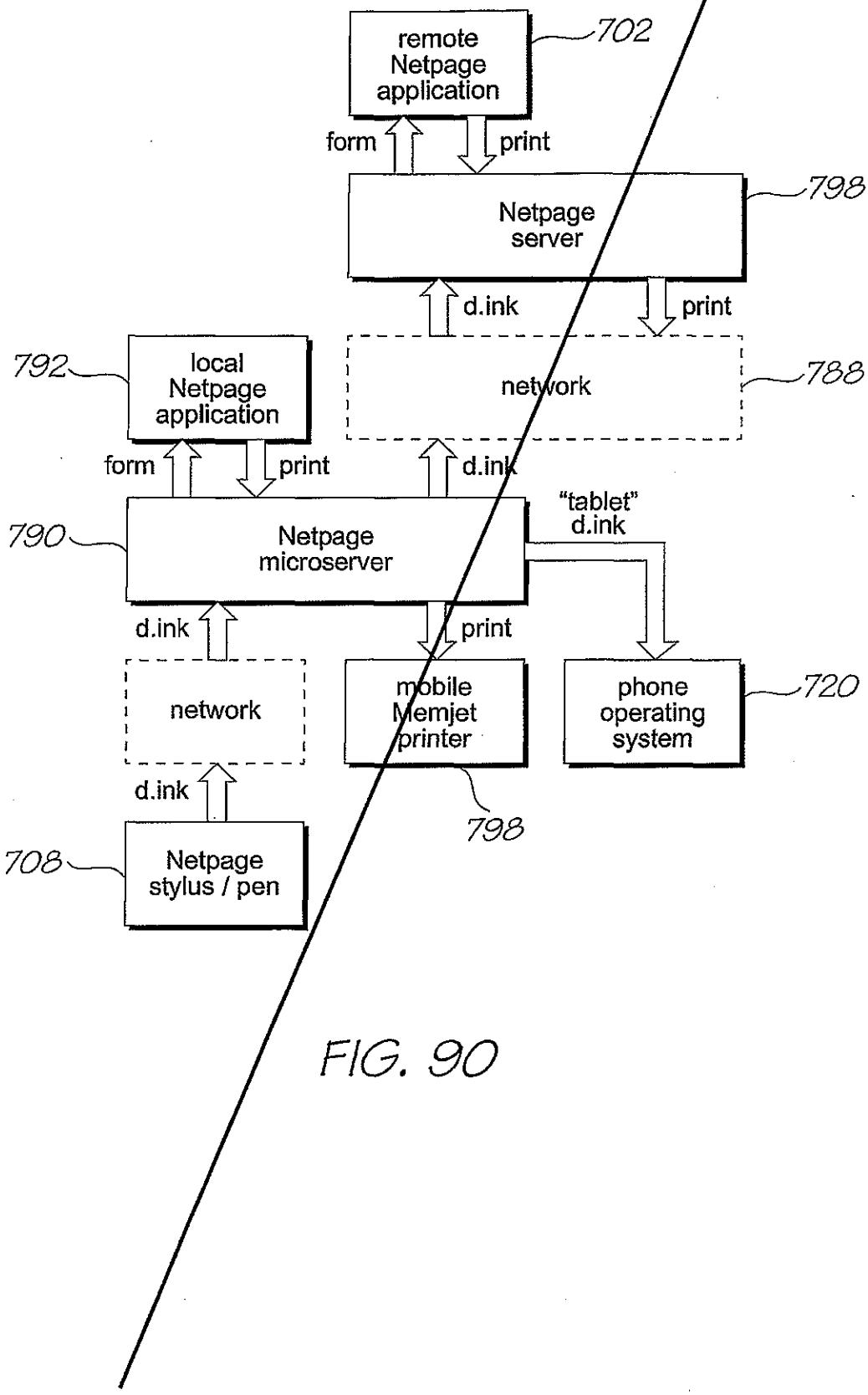
remote Netpage application
702
form
print
Netpage server
798
d.ink
print
792
local Netpage application
network
788
form
print
d.ink
"tablet" d.ink
790
Netpage microserver
d.ink
print
network
mobile Memjet printer
phone operating system
720
d.ink
798
708
Netpage stylus / pen

FIG. 90

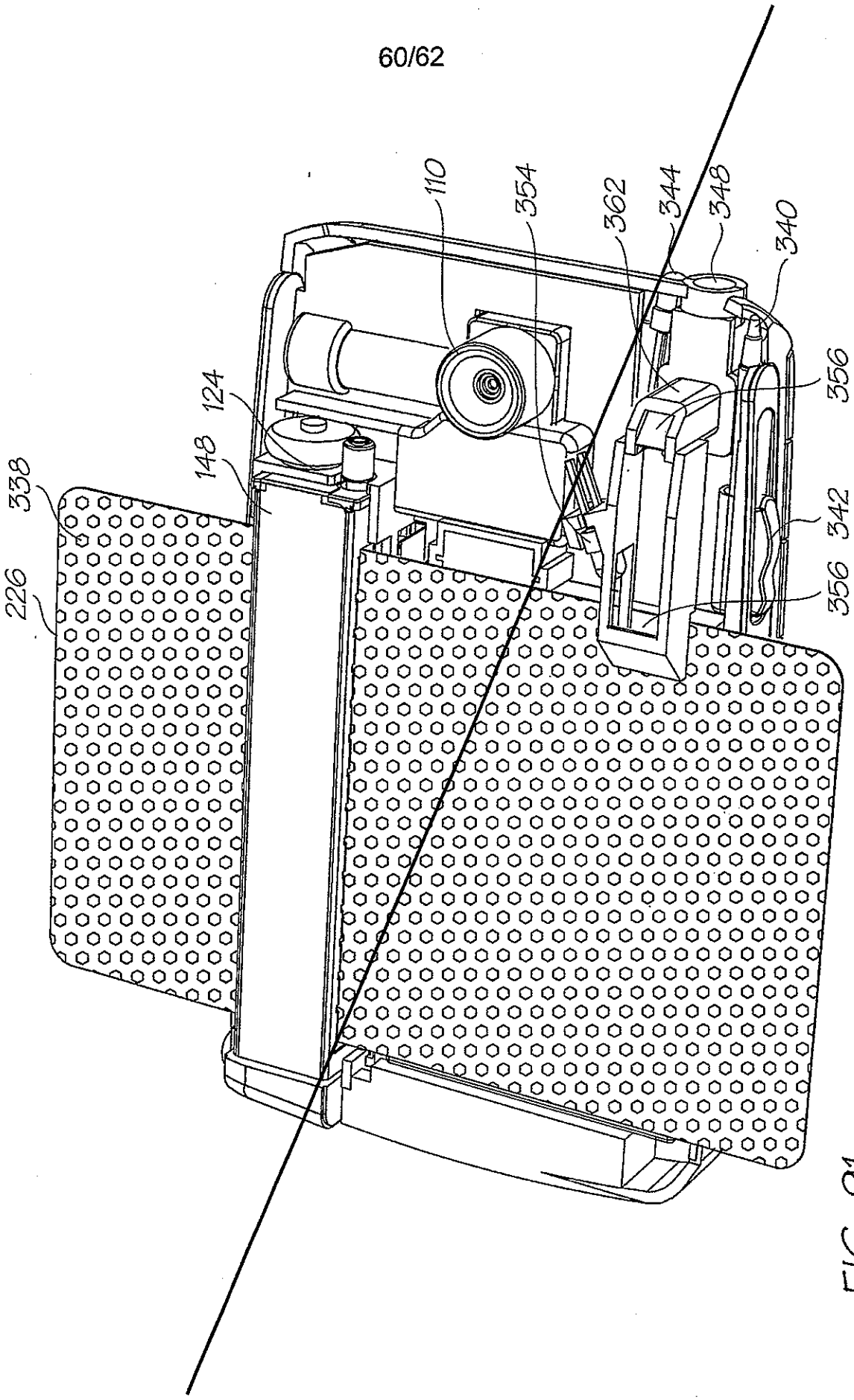

FIG. 91

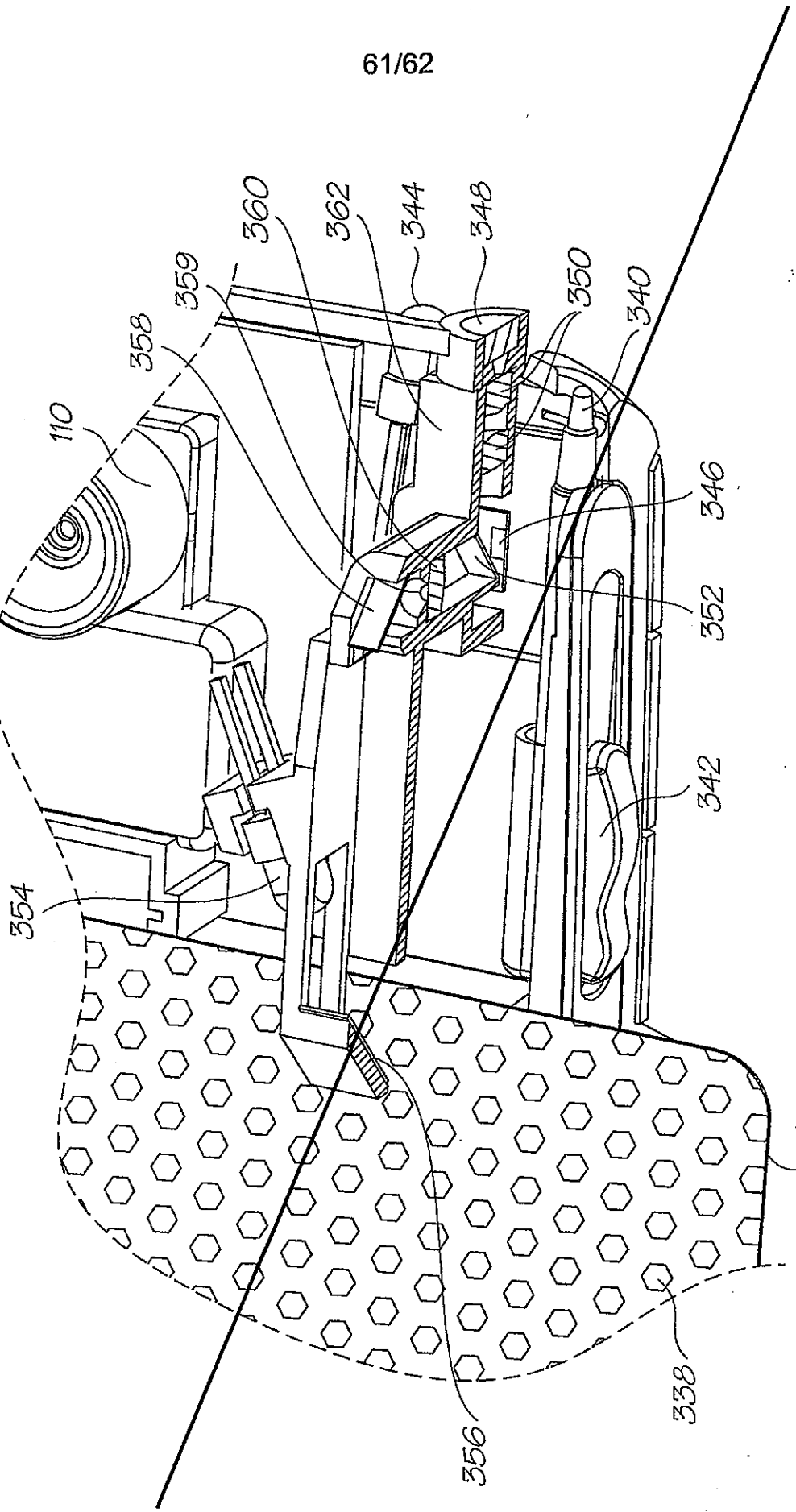

FIG. 92

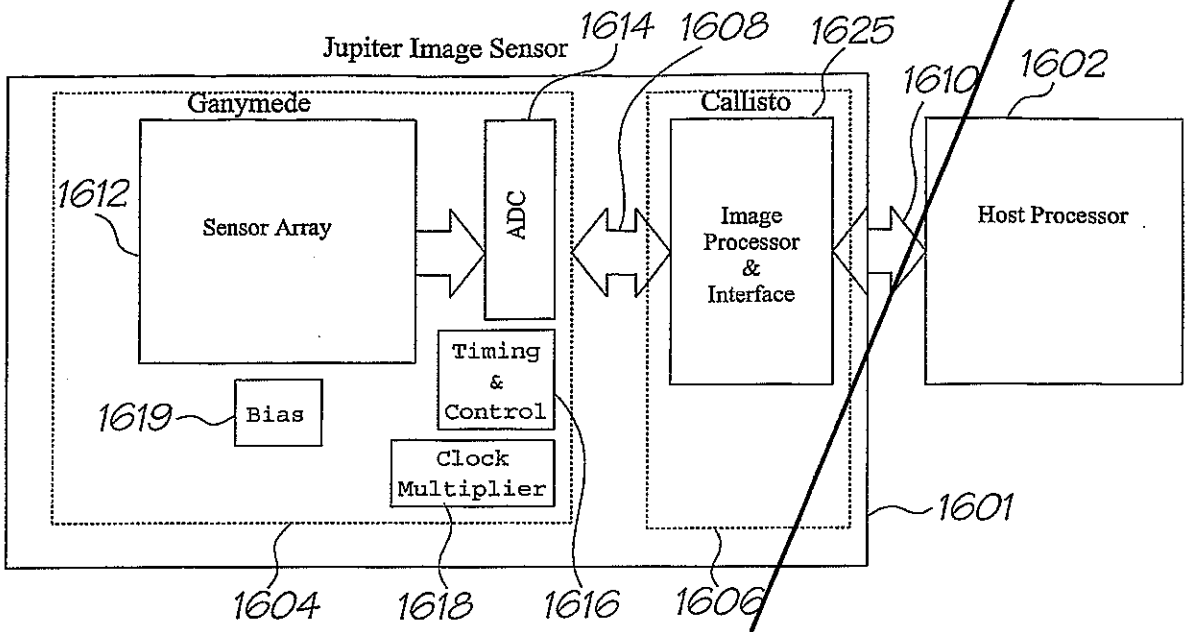
Jupiter Image Sensor
1614
1608
1625
1610
1602
Ganymede
Callisto
1612
Sensor Array
ADC
Image Processor & Interface
Host Processor
Timing & Control
1619
Bias
Clock Multiplier
1601
1604
1618
1616
1606

FIG. 93

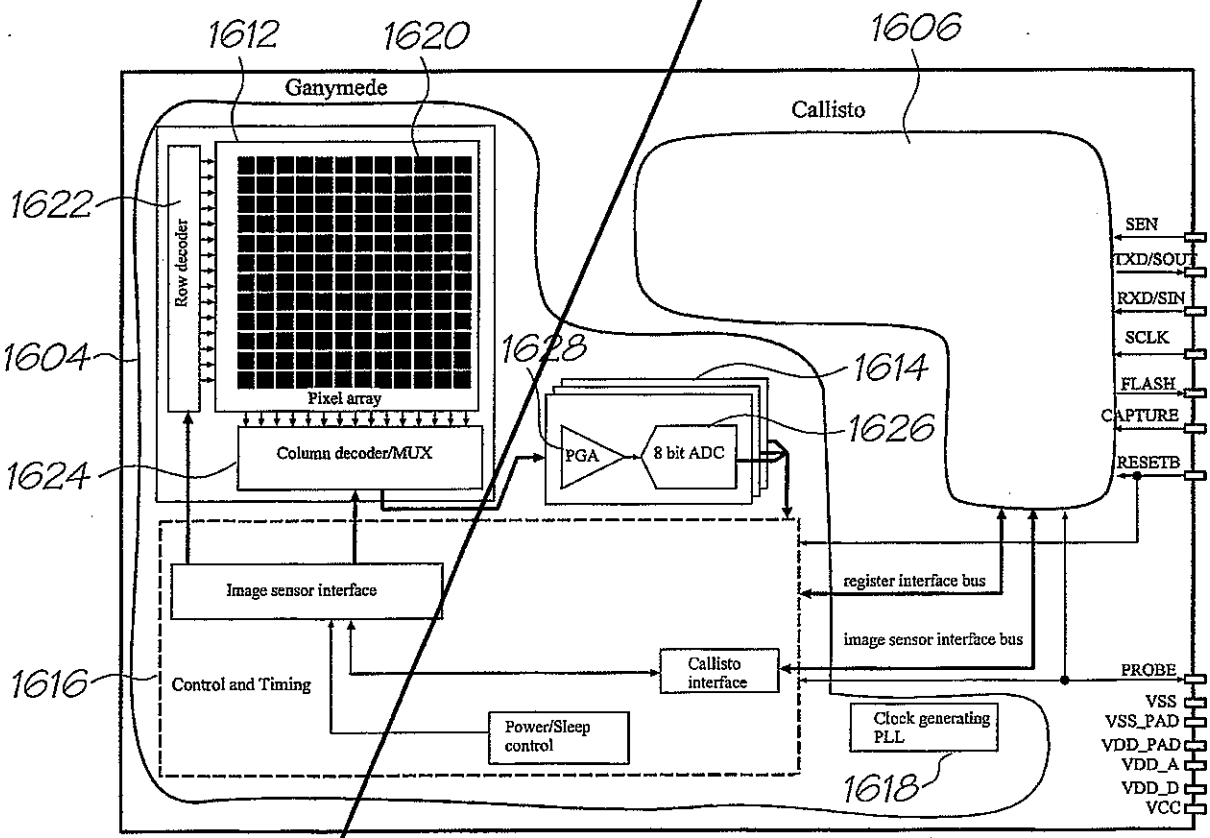
1612
1620
1606
Ganymede
Callisto
1622
Row decoder
Pixel array
1604
1628
1614
1626
1624
Column decoder/MUX
PGA
8 bit ADC
SEN
TXD/SOUT
RXD/SIN
SCLK
FLASH
CAPTURE
RESETB
register interface bus
image sensor interface bus
Image sensor interface
1616
Control and Timing
Callisto interface
Power/Sleep control
Clock generating PLL
1618
PROBE
VSS
VSS_PAD
VDD_PAD
VDD_A
VDD_D
VCC

FIG. 94

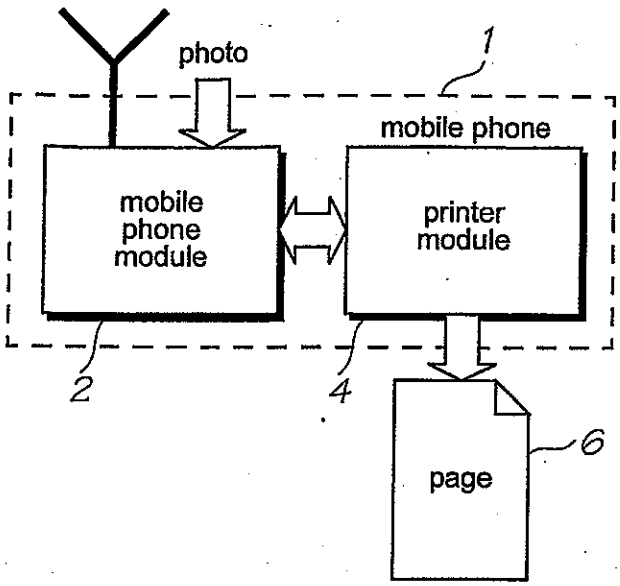
photo
1
mobile phone
mobile phone module
printer module
2
4
page
6

FIG. 1

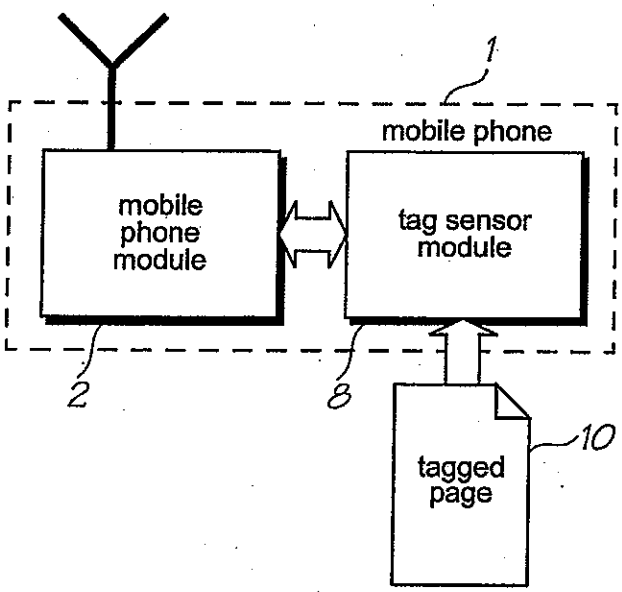
1
mobile phone
mobile phone module
tag sensor module
2
8
tagged page
10

FIG. 2

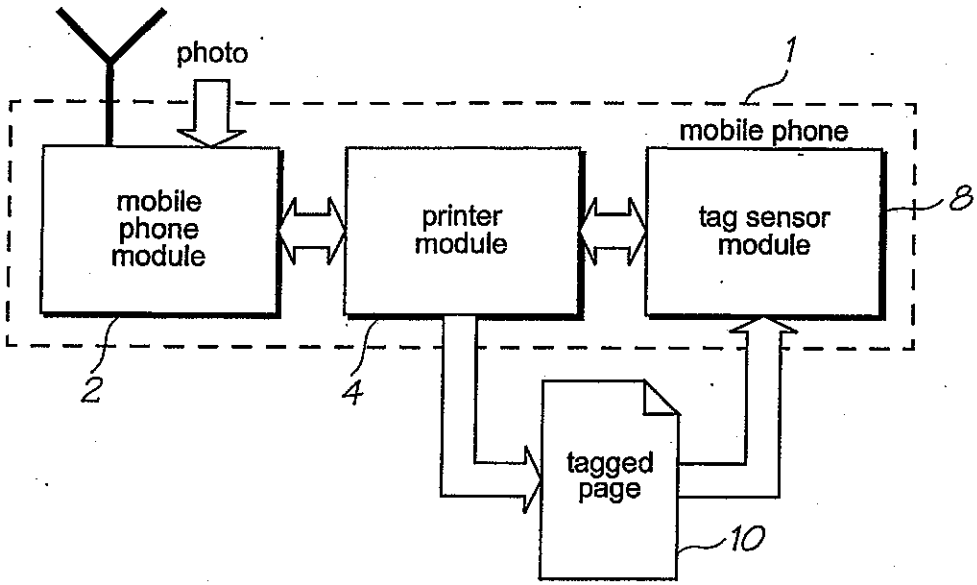
photo
1
mobile phone
mobile phone module
printer module
tag sensor module
8
2
4
tagged page
10

FIG. 3

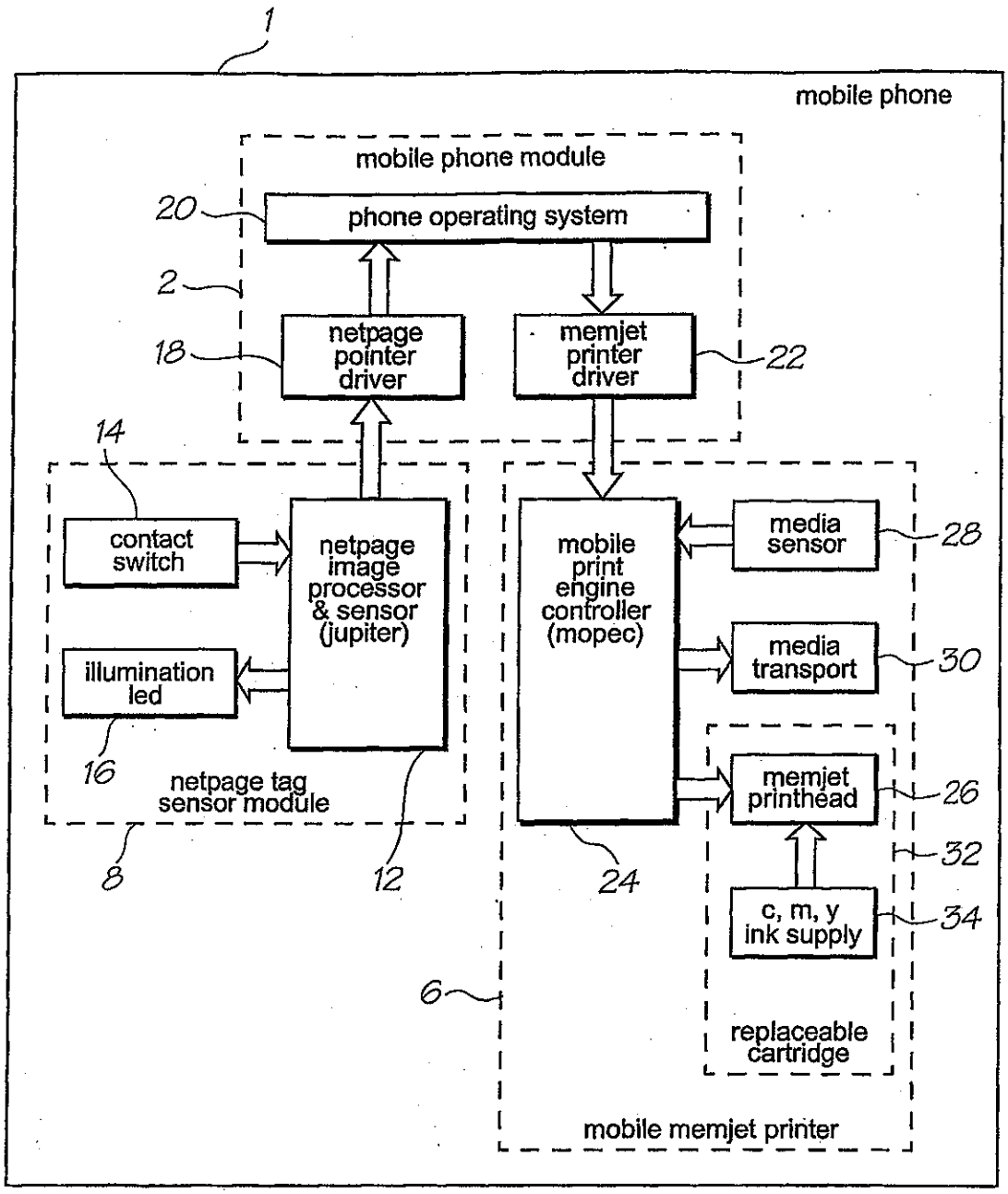
1
mobile phone
mobile phone module
20
phone operating system
2
18
netpage pointer driver
memjet printer driver
22
14
contact switch
netpage image processor & sensor (jupiter)
illumination led
16
netpage tag sensor module
8
12
mobile print engine controller (mopec)
24
media sensor
28
media transport
30
memjet printhead
26
32
c, m, y ink supply
34
6
replaceable cartridge
mobile memjet printer

FIG. 4

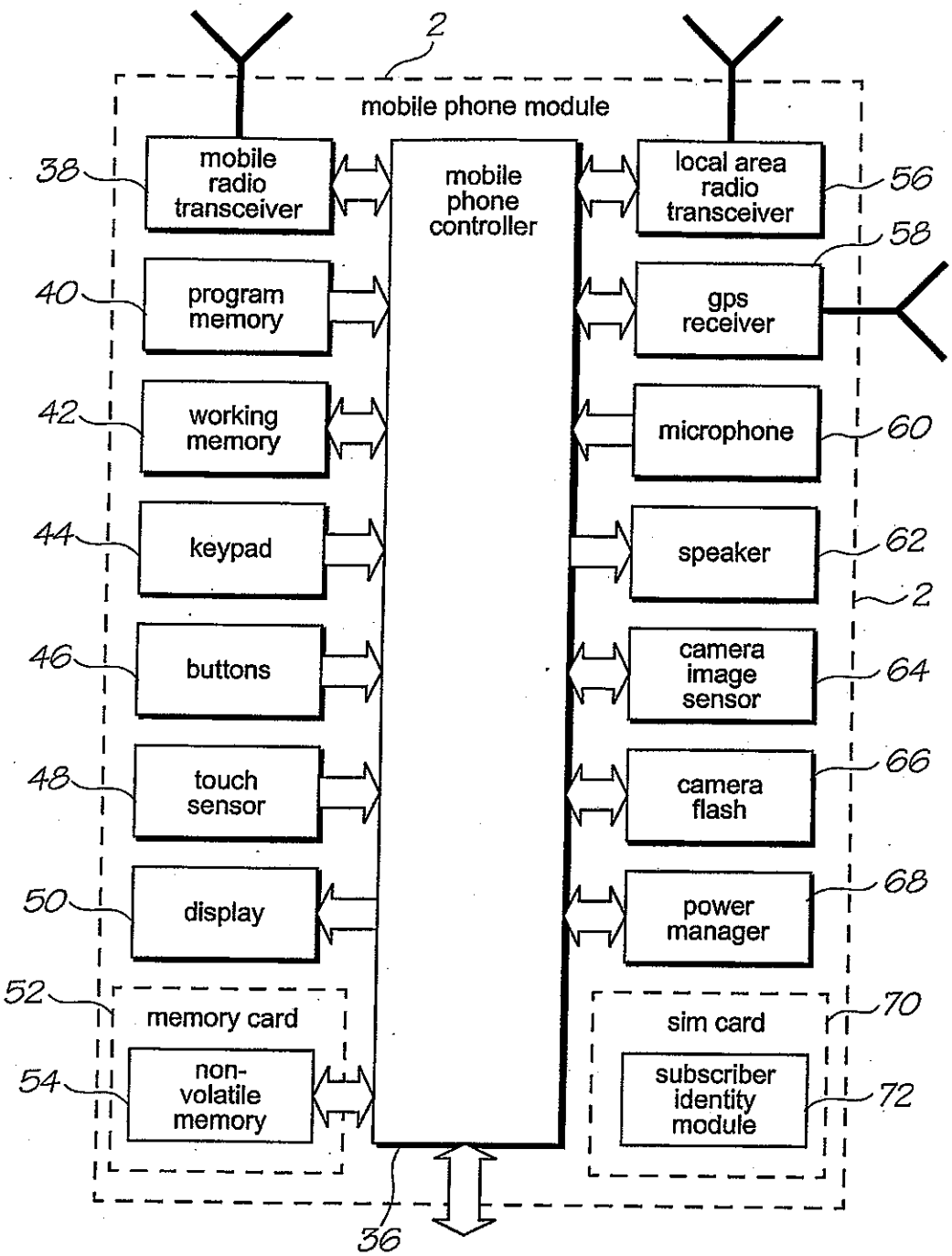
2
mobile phone module
38
mobile radio transceiver
mobile phone controller
local area radio transceiver
56
58
40
program memory
gps receiver
42
working memory
microphone
60
44
keypad
speaker
62
2
46
buttons
camera image sensor
64
48
touch sensor
camera flash
66
50
display
power manager
68
52
memory card
sim card
70
54
non-volatile memory
subscriber identity module
72
36

FIG. 5

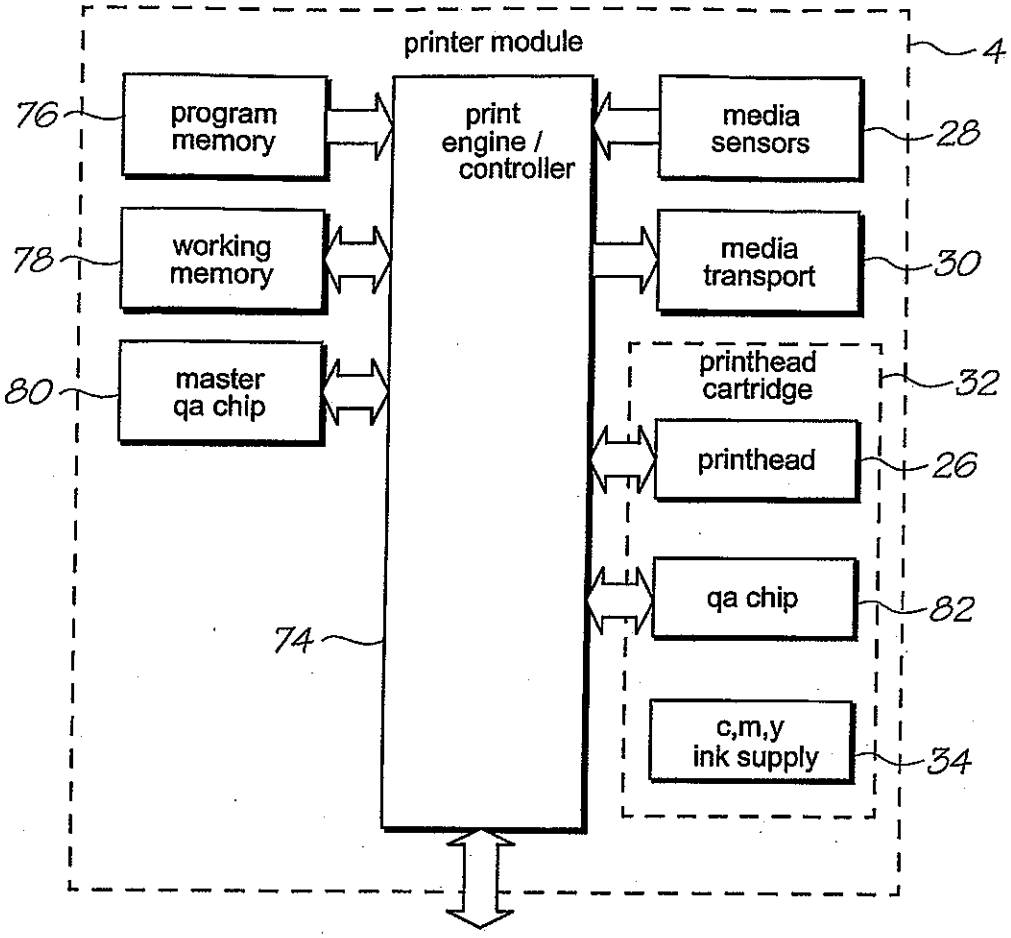
printer module
4
76
program memory
print engine / controller
media sensors
28
78
working memory
media transport
30
80
master qa chip
printhead cartridge
32
printhead
26
qa chip
82
74
c,m,y ink supply
34

FIG. 6

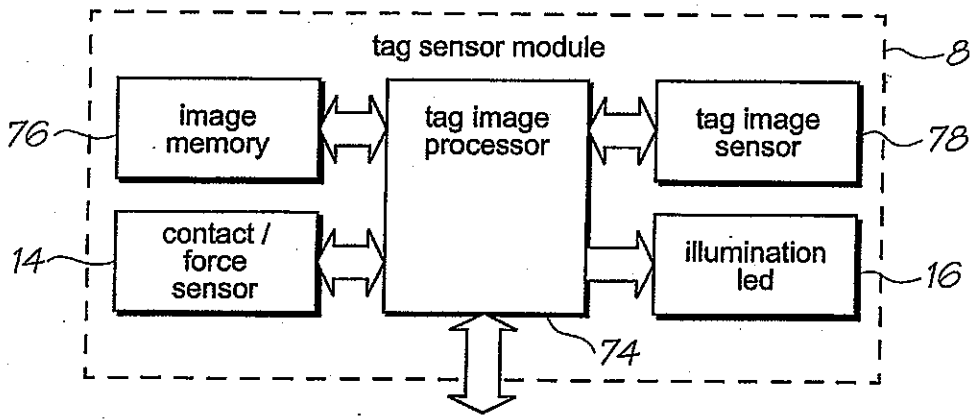
tag sensor module
8
76
image memory
tag image processor
tag image sensor
78
14
contact / force sensor
illumination led
16
74

FIG. 7

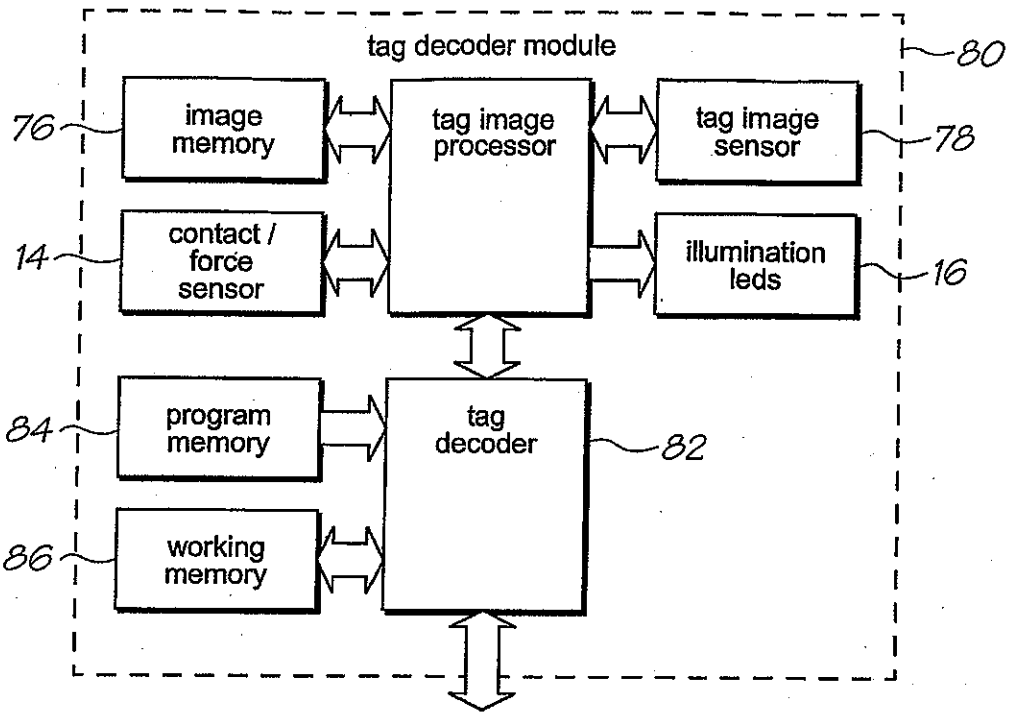
tag decoder module
80
image memory
76
tag image processor
tag image sensor
78
contact / force sensor
14
illumination leds
16
program memory
84
tag decoder
82
working memory
86

FIG. 8

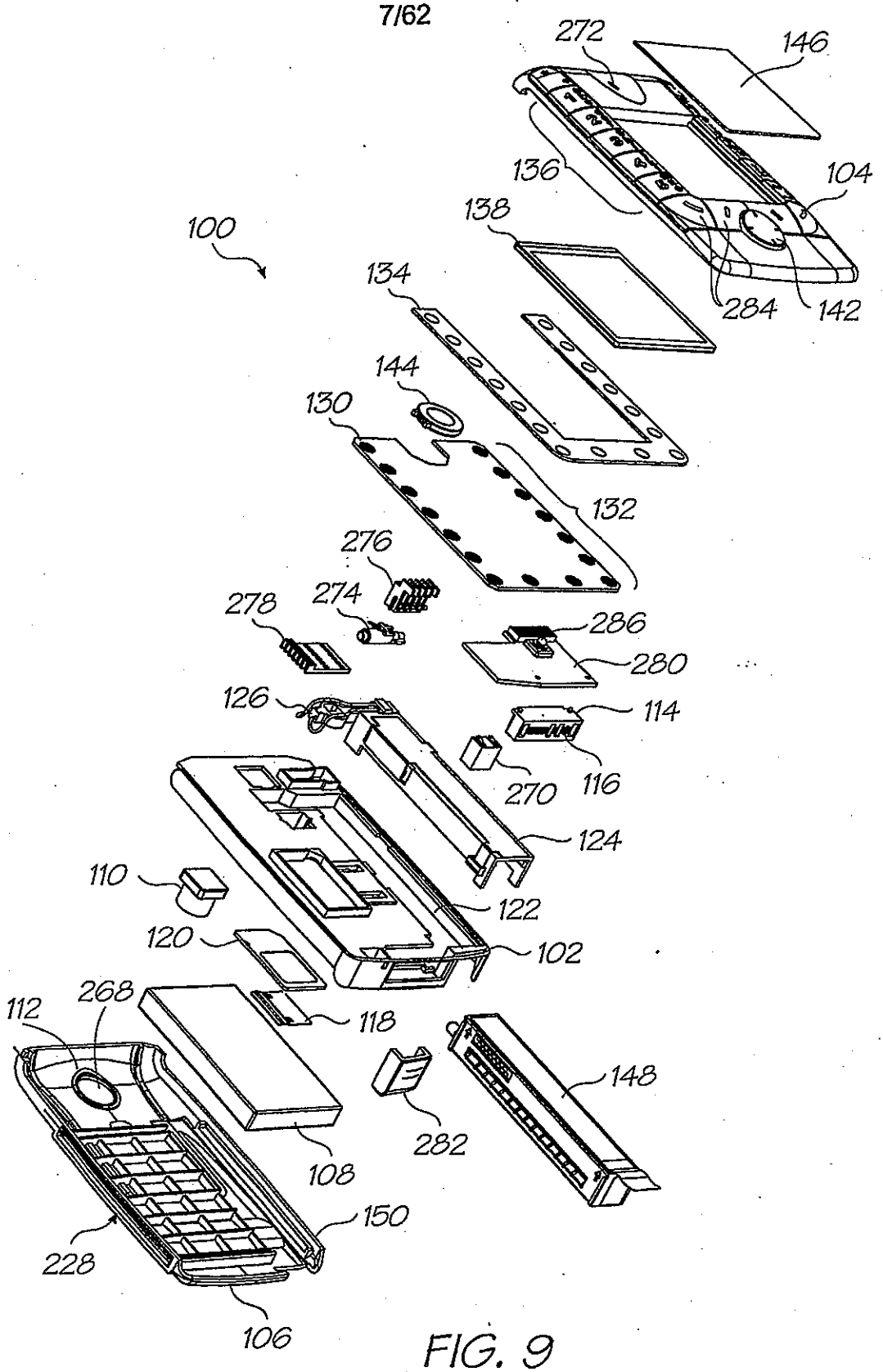
272
146
136
104
138
100
134
284
142
144
130
132
276
278
274
286
280
126
114
270
116
124
110
122
120
102
268
112
118
148
282
108
150
228
106

FIG. 9

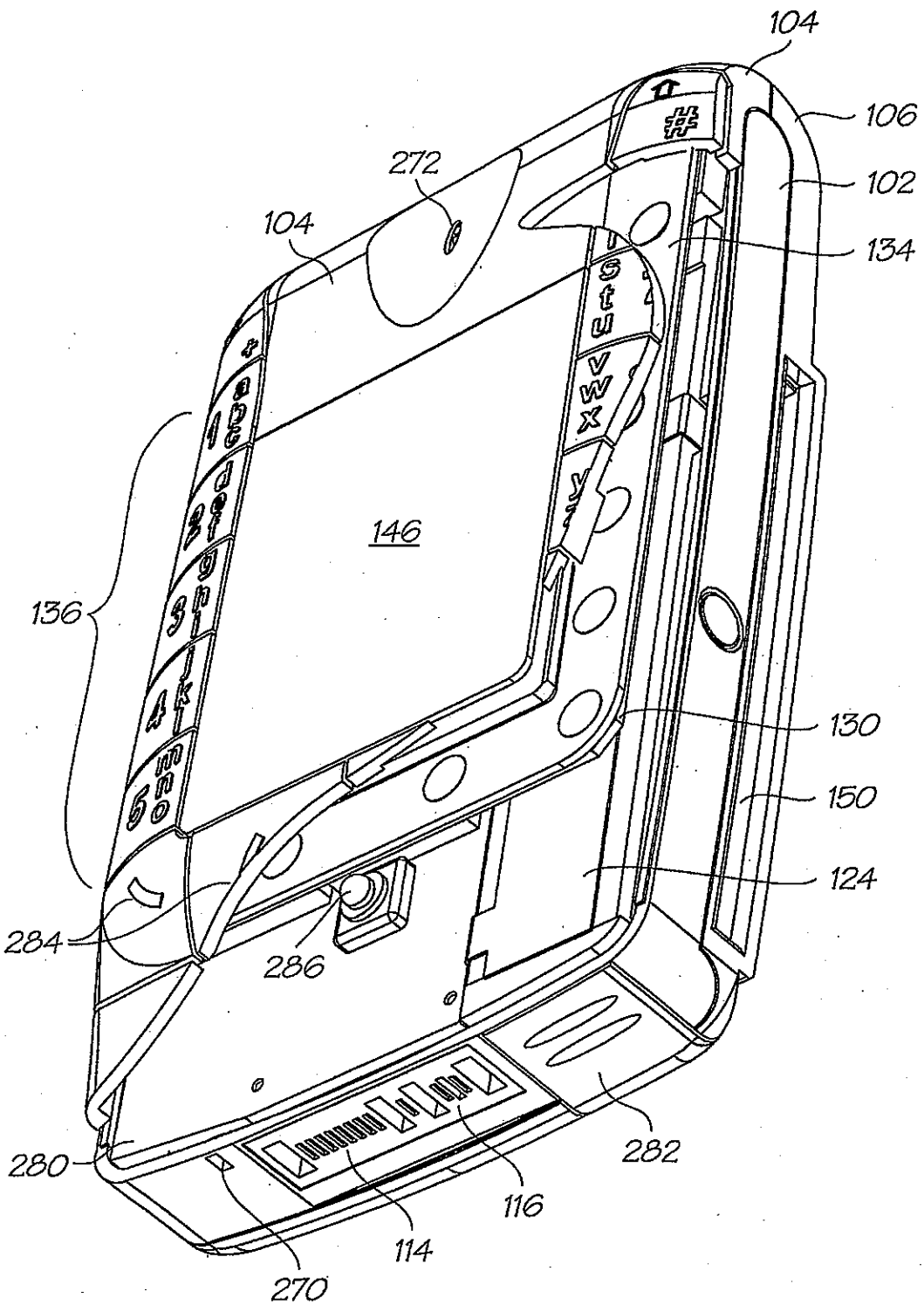
104
106
102
134
272
104
146
136
130
150
124
284
286
280
282
116
114
270

FIG. 10

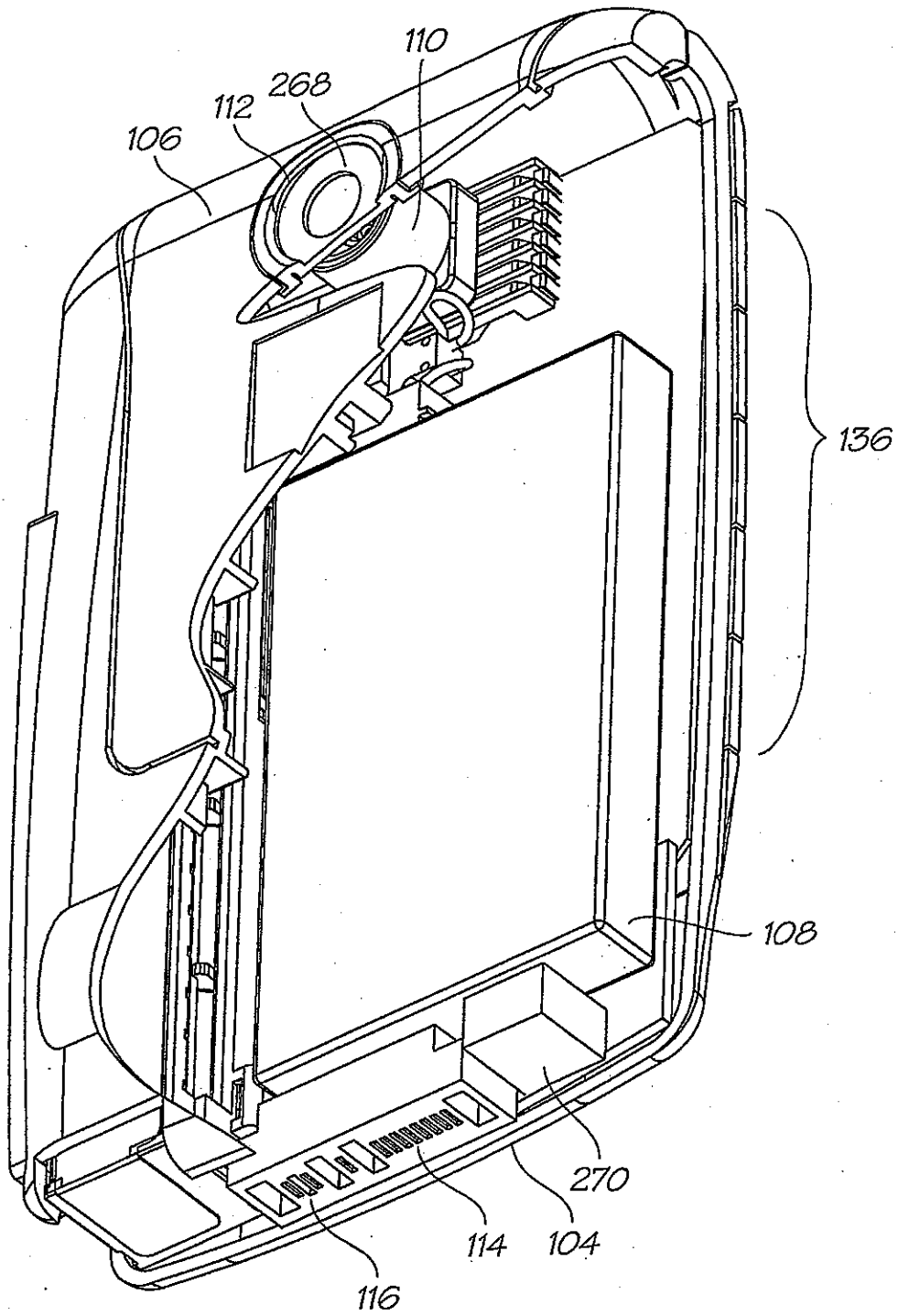

FIG. 11

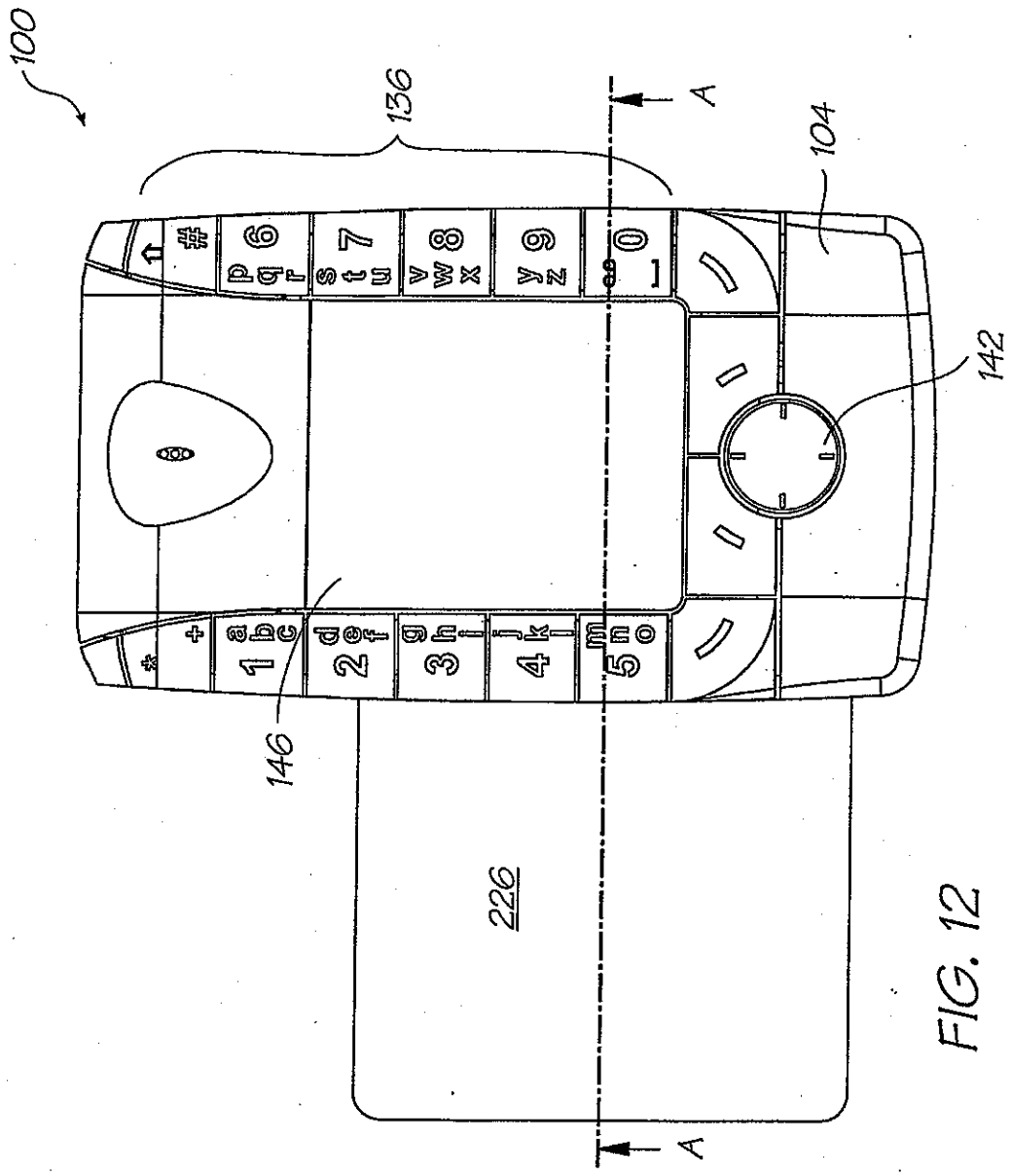

FIG. 12

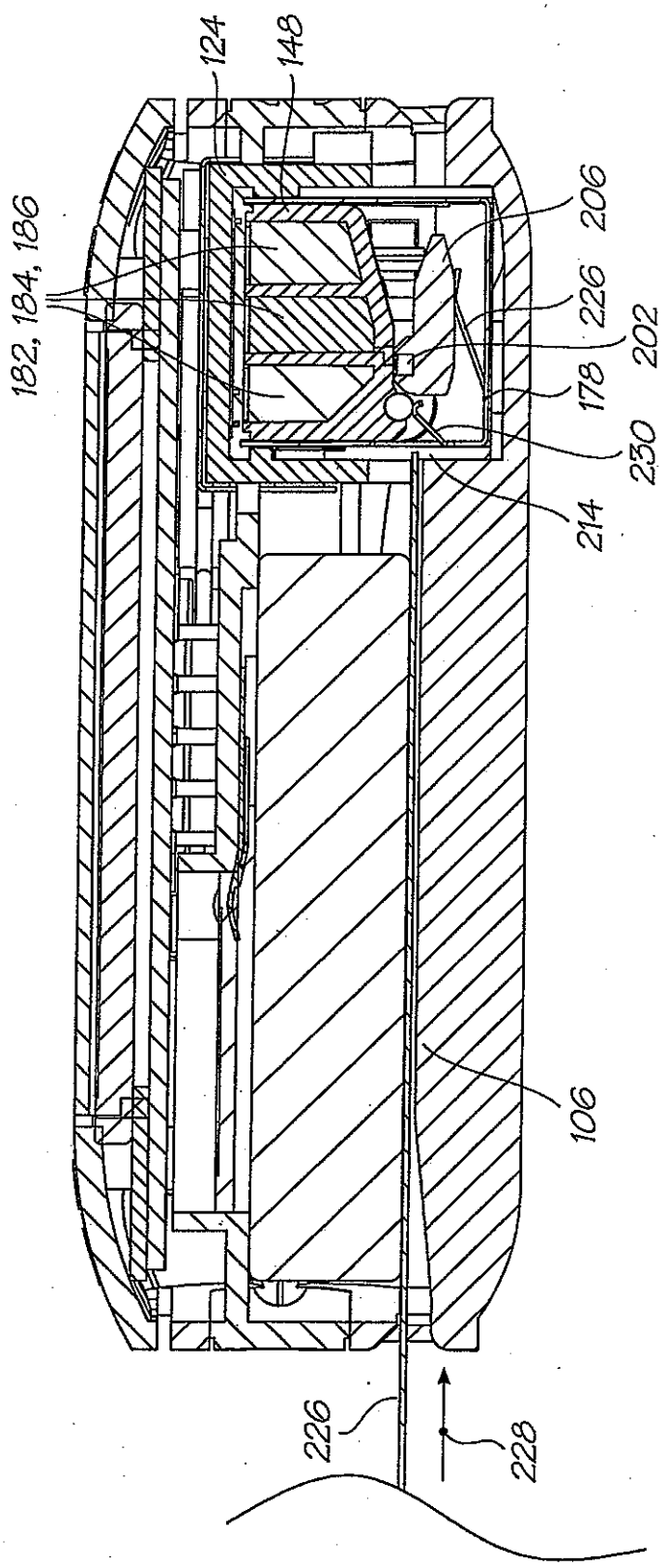

FIG. 13

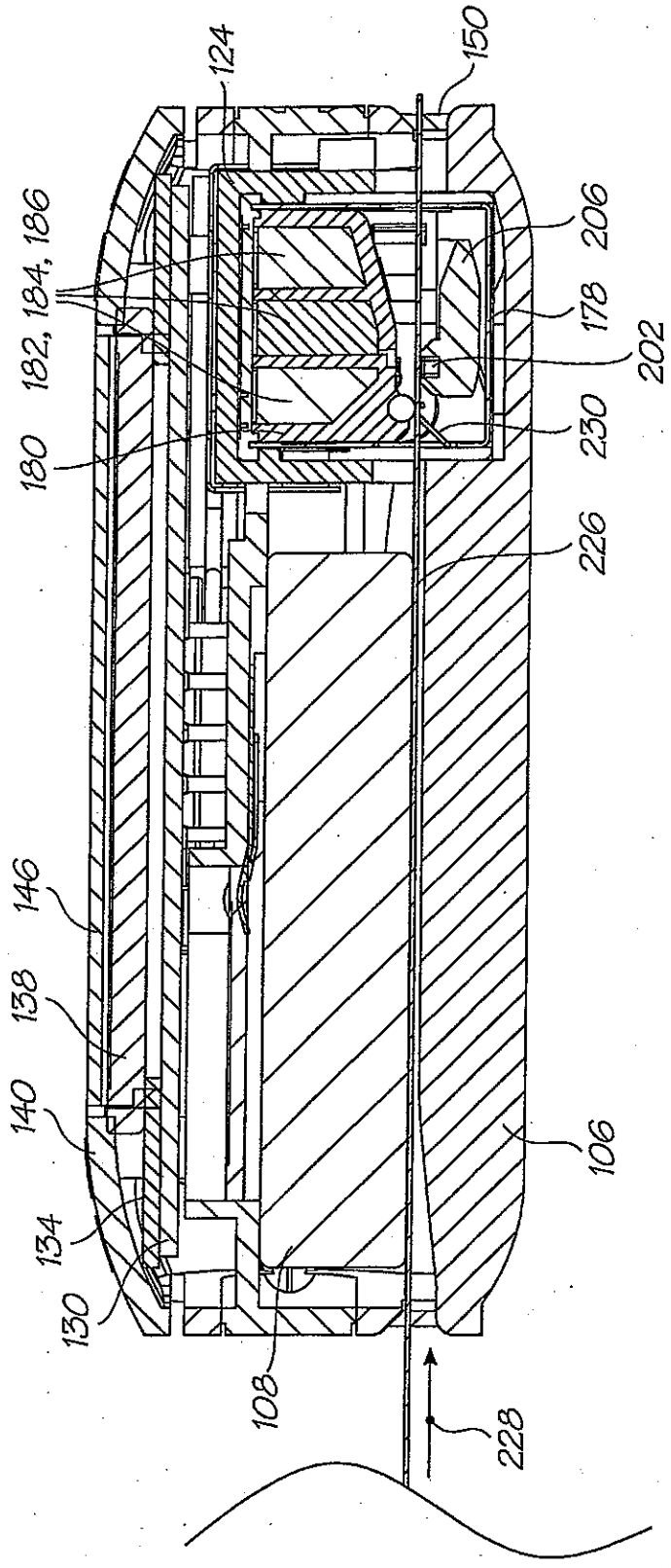
124
150
206
182, 184, 186
178
202
180
230
226
146
138
140
106
134
130
108
228

FIG. 14

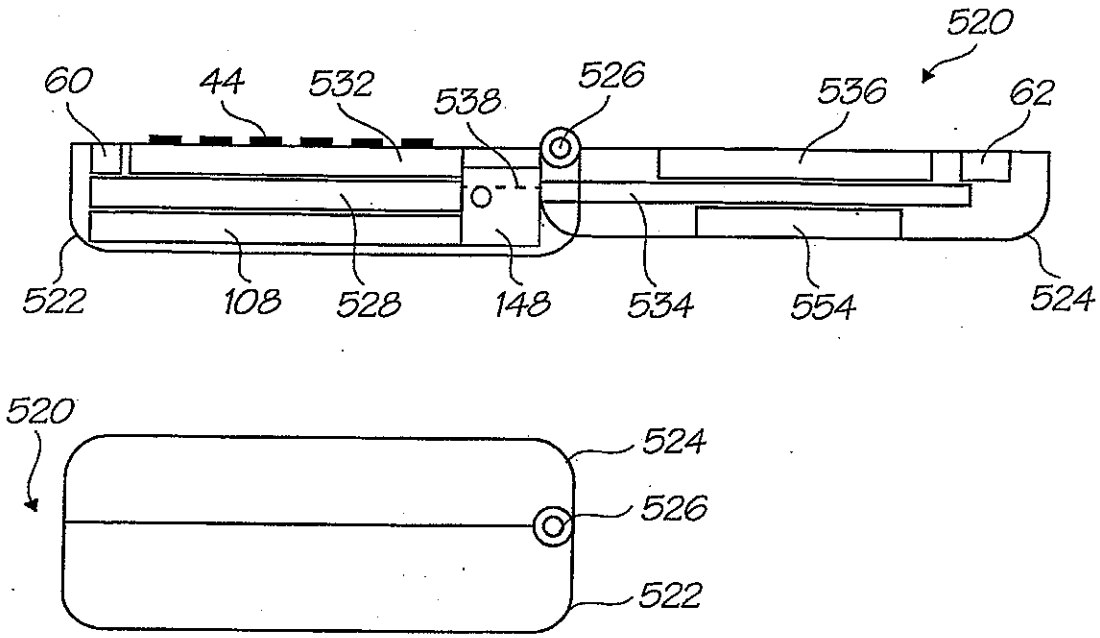
520
60
44
532
538
526
536
62
522
108
528
148
534
554
524
520
524
526
522

FIG. 15

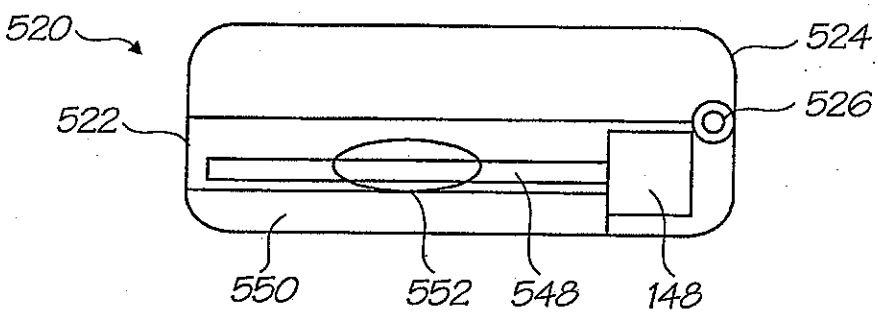
520
524
522
526
550
552
548
148

FIG. 16

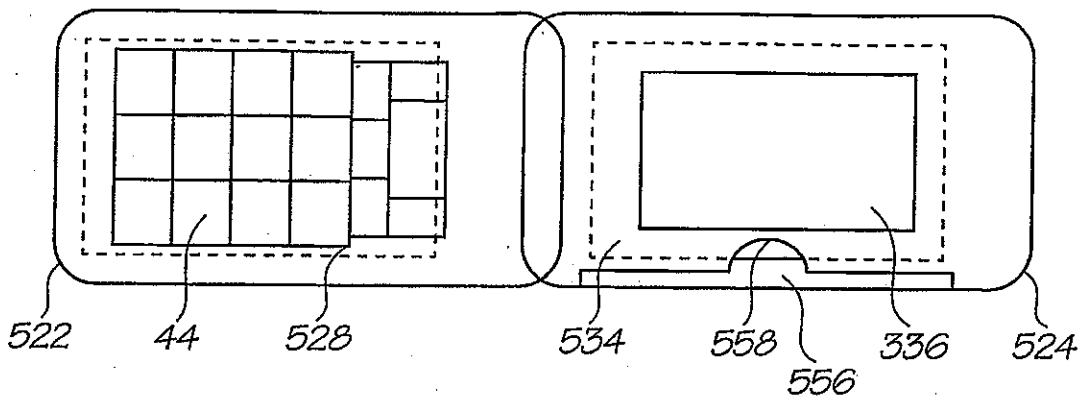
522
44
528
534
558
556
336
524

FIG. 17

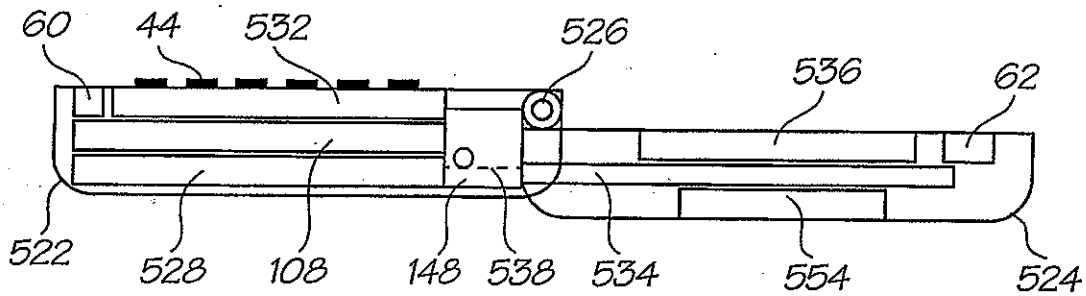
60
44
532
526
536
62
522
528
108
148
538
534
554
524

FIG. 18

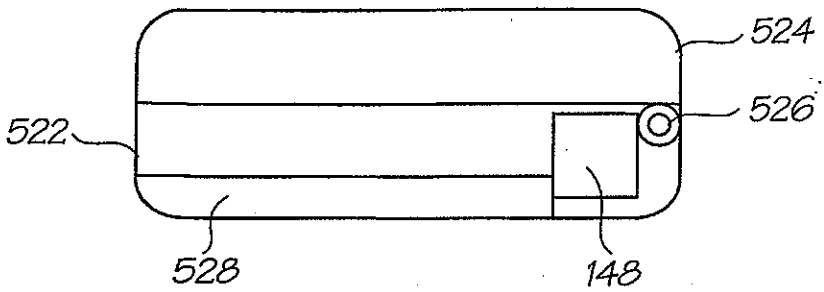

FIG. 19

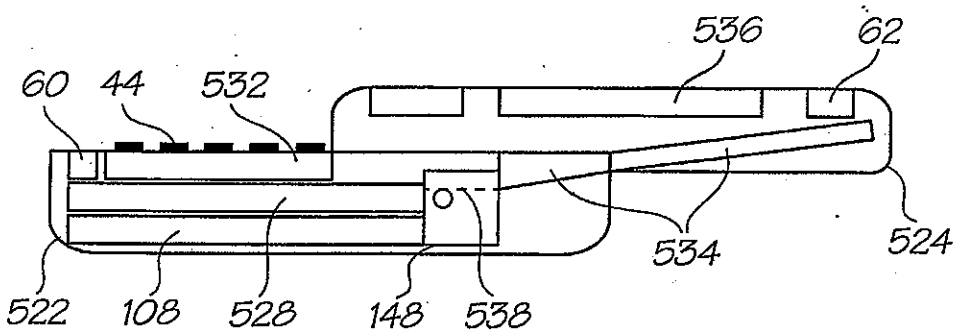

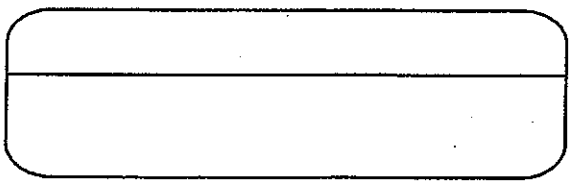

FIG. 20

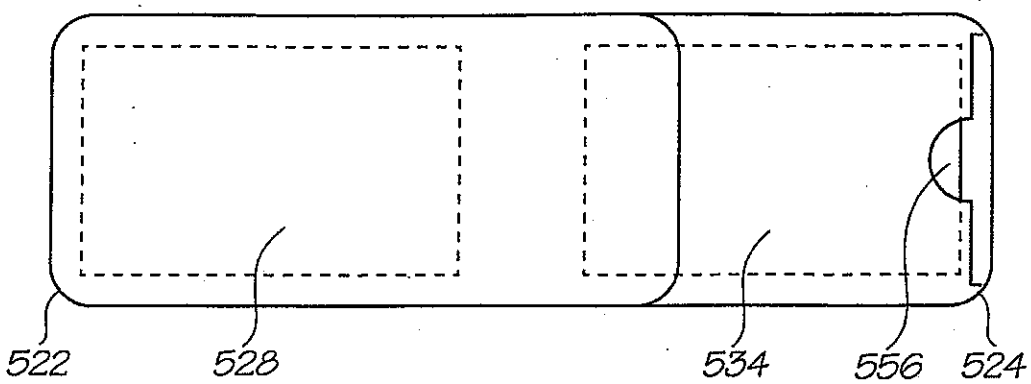

FIG. 21

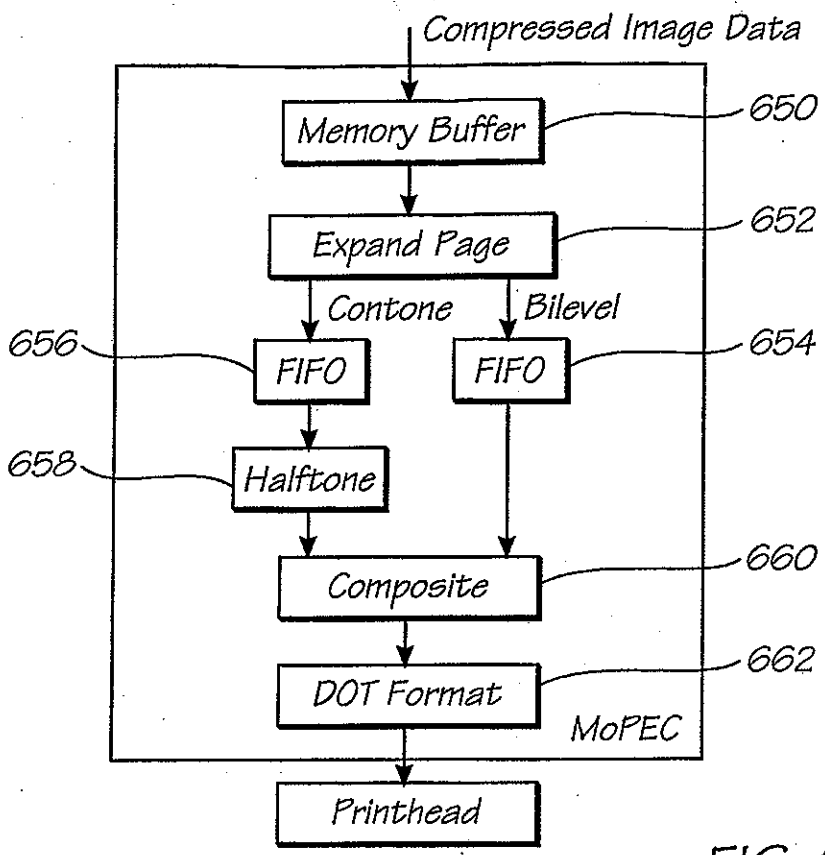
Compressed Image Data
Memory Buffer
650
Expand Page
652
Contone
Bilevel
656
FIFO
FIFO
654
658
Halftone
Composite
660
DOT Format
662
MoPEC
Printhead

FIG. 22

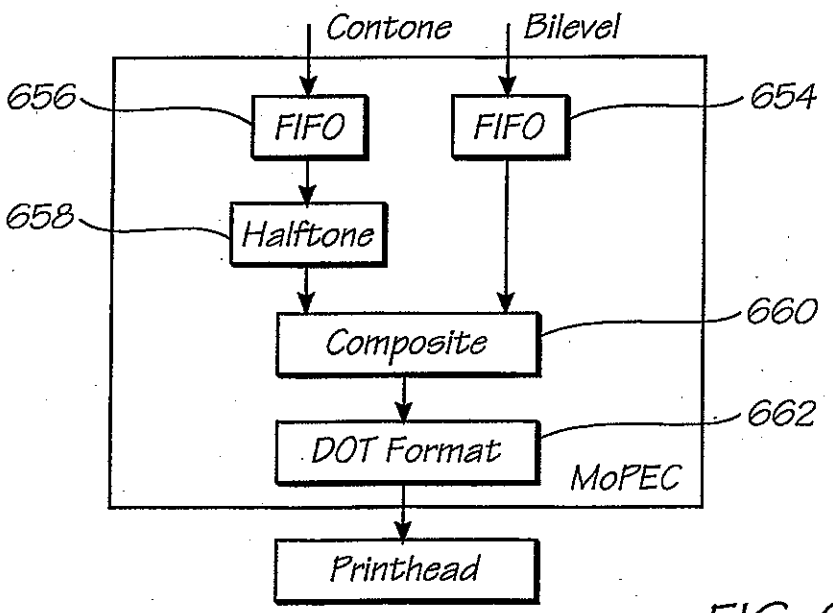
Contone
Bilevel
656
FIFO
FIFO
654
658
Halftone
Composite
660
DOT Format
662
MoPEC
Printhead

FIG. 23

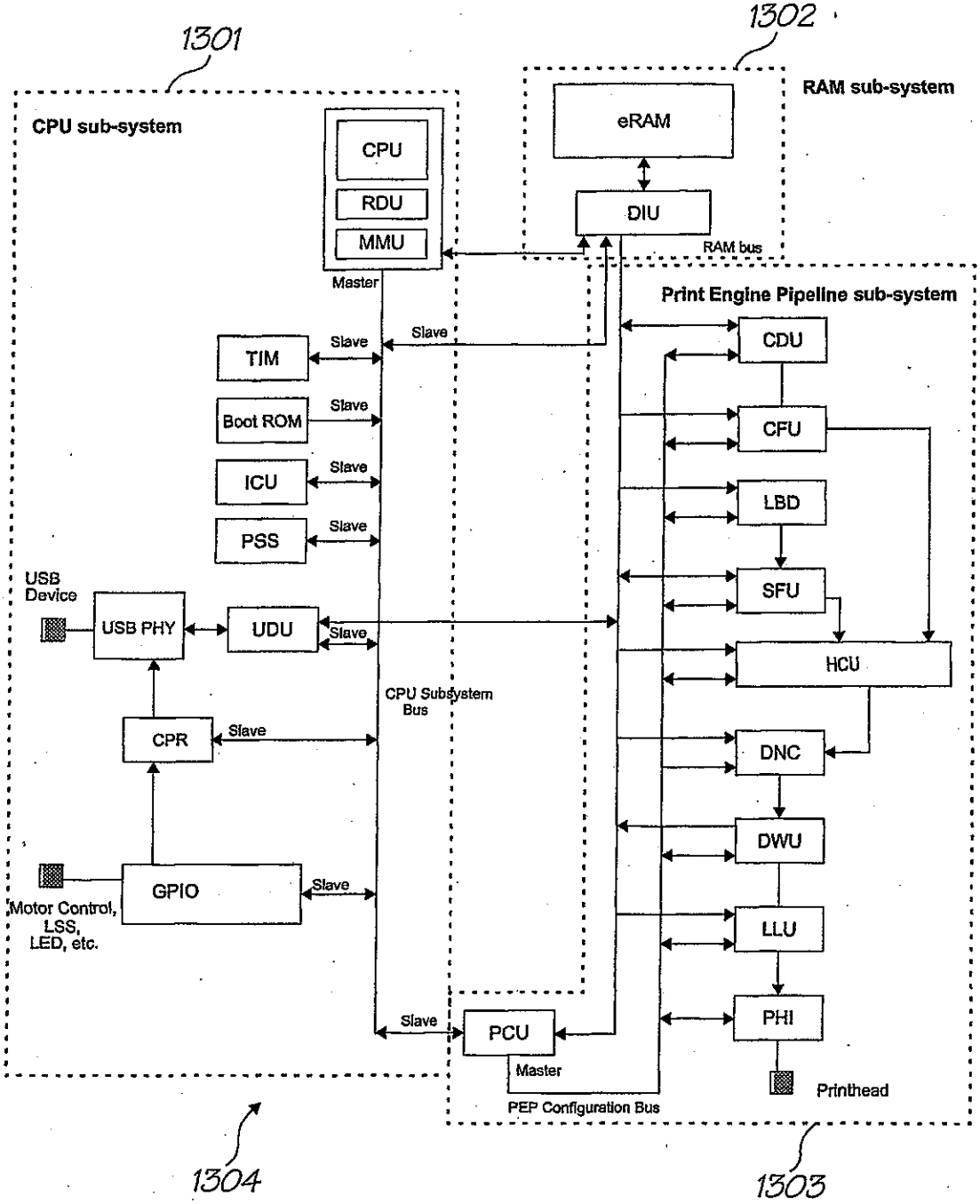
1301
1302
CPU sub-system
RAM sub-system
CPU
RDU
MMU
eRAM
DIU
RAM bus
Master
Print Engine Pipeline sub-system
Slave
TIM
Boot ROM
ICU
PSS
USB Device
USB PHY
UDU
CPU Subsystem Bus
CPR
GPIO
Motor Control, LSS, LED, etc.
CDU
CFU
LBD
SFU
HCU
DNC
DWU
LLU
PHI
PCU
Printhead
PEP Configuration Bus
1304
1303

FIG. 24

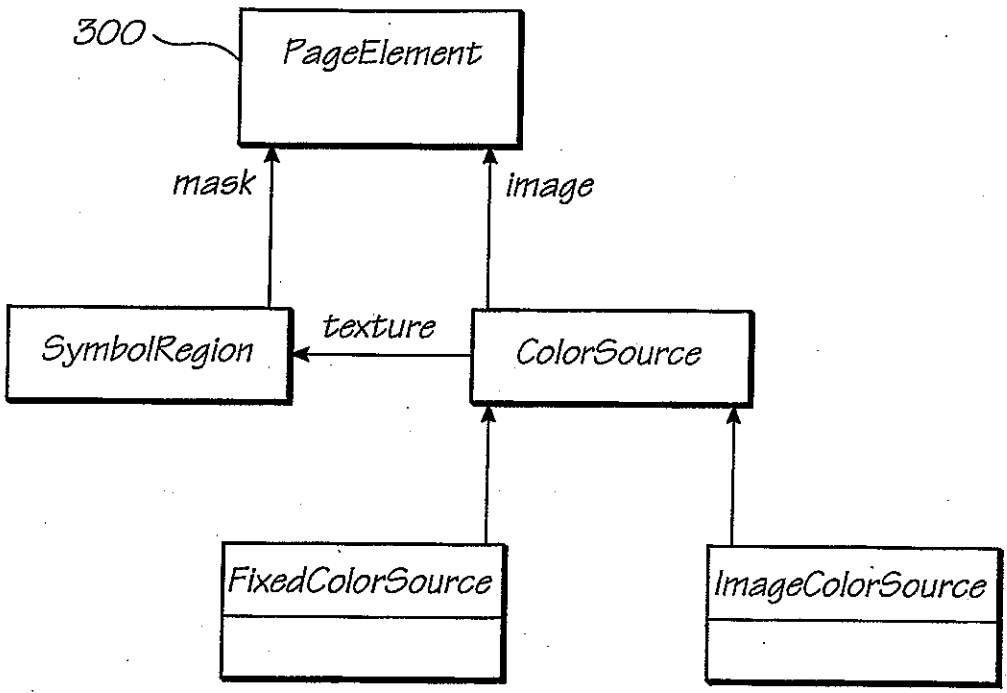
300
PageElement
mask
image
SymbolRegion
texture
ColorSource
FixedColorSource
ImageColorSource

FIG. 25

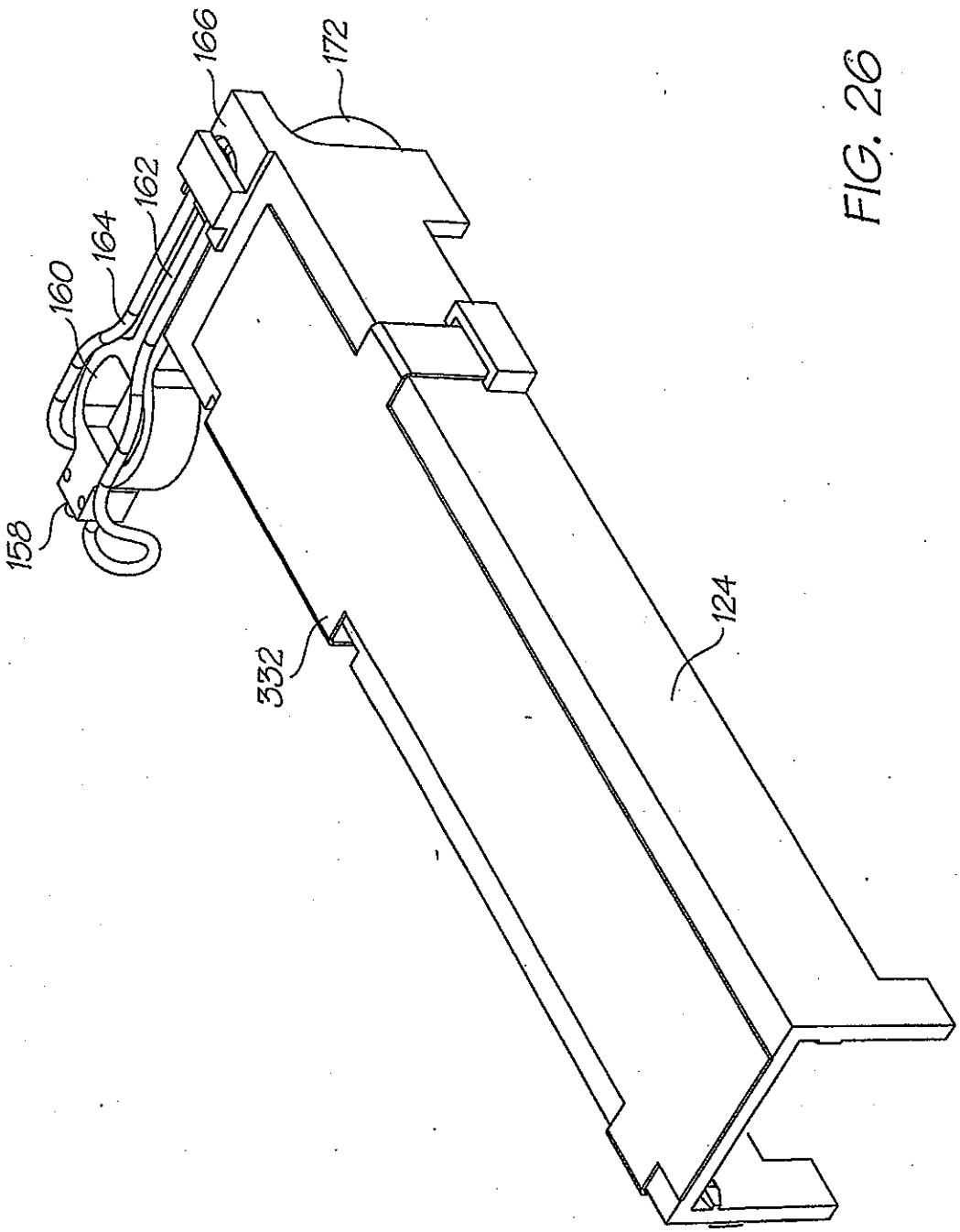

FIG. 26

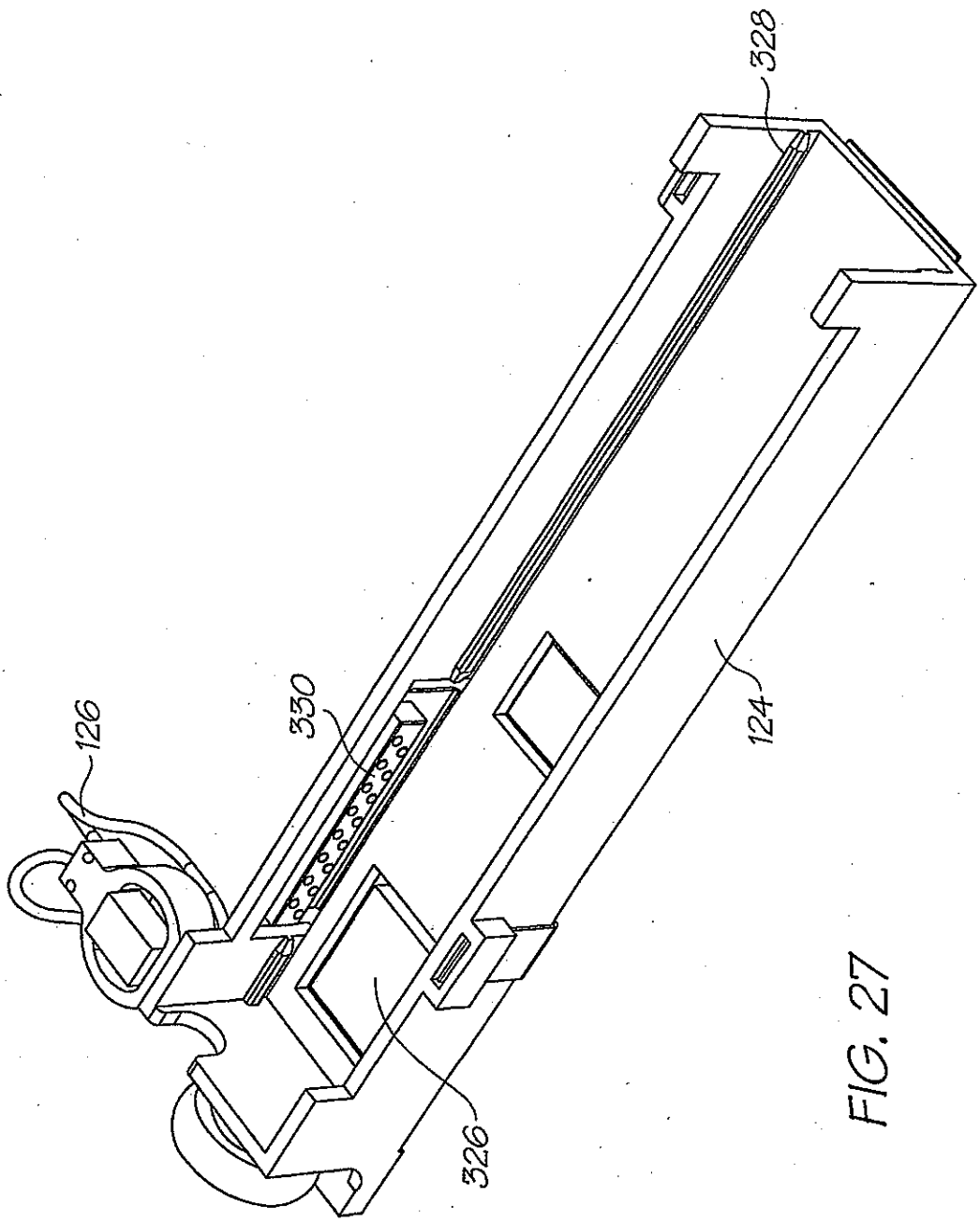

FIG. 27

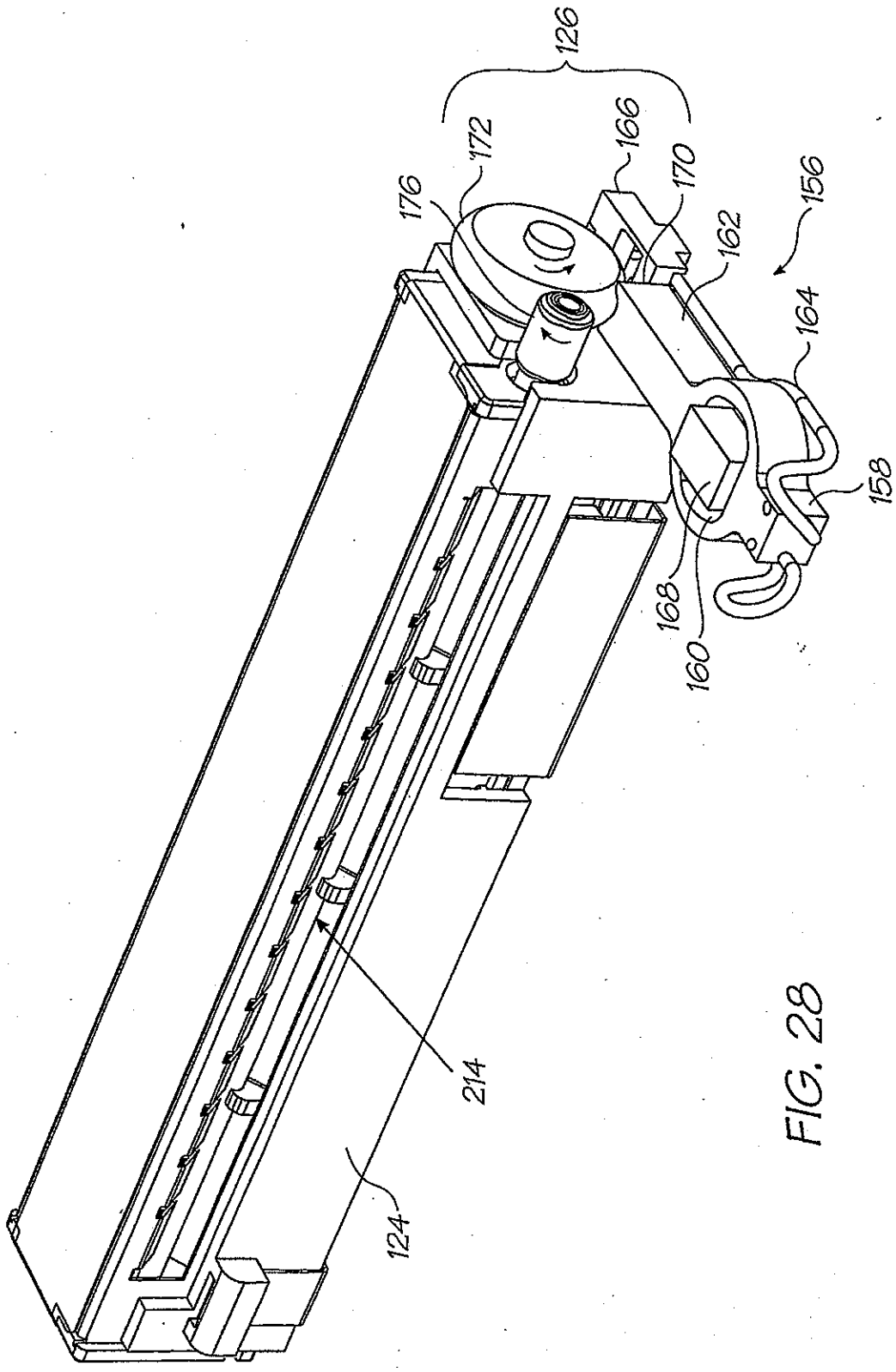

FIG. 28

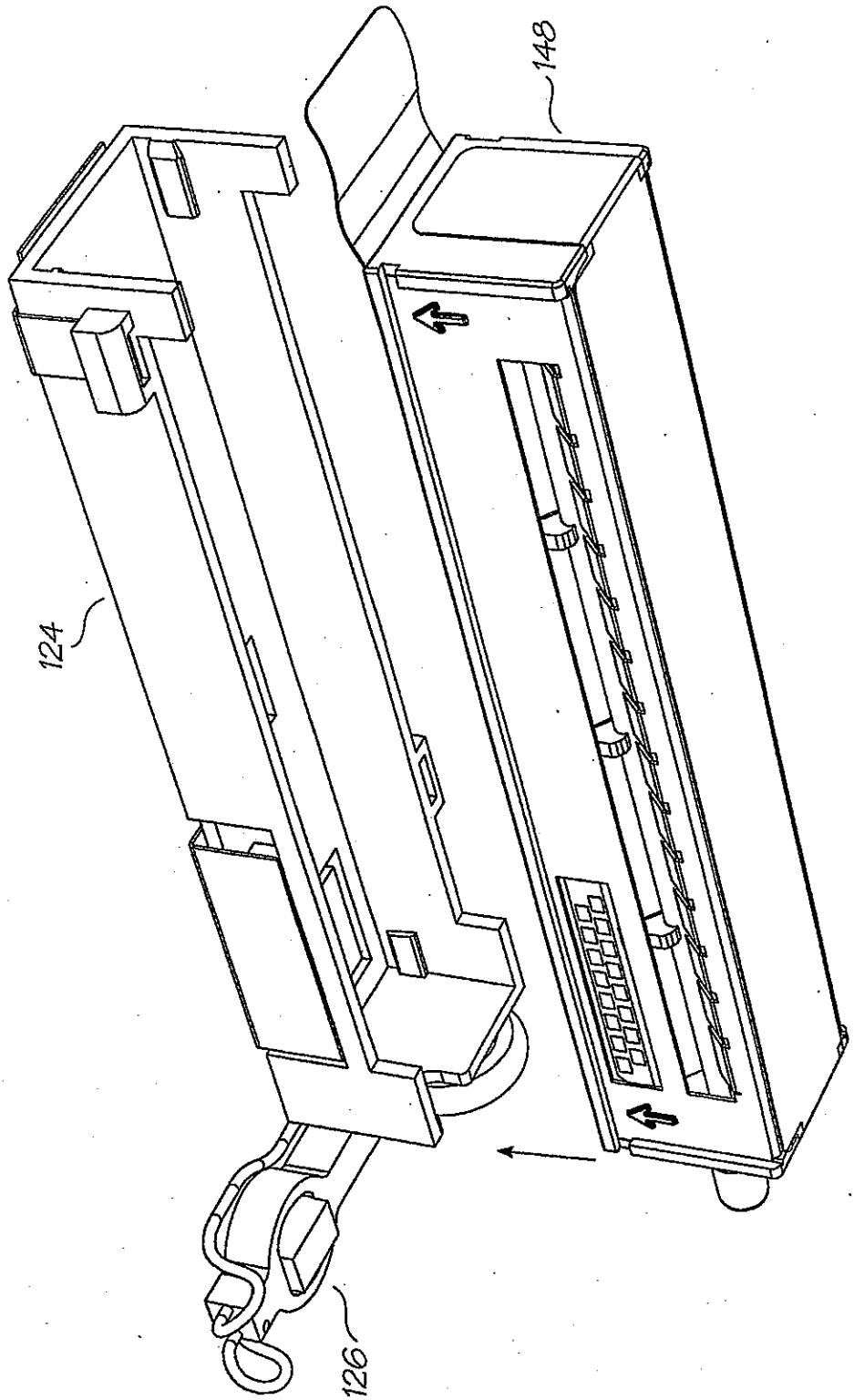

FIG. 29

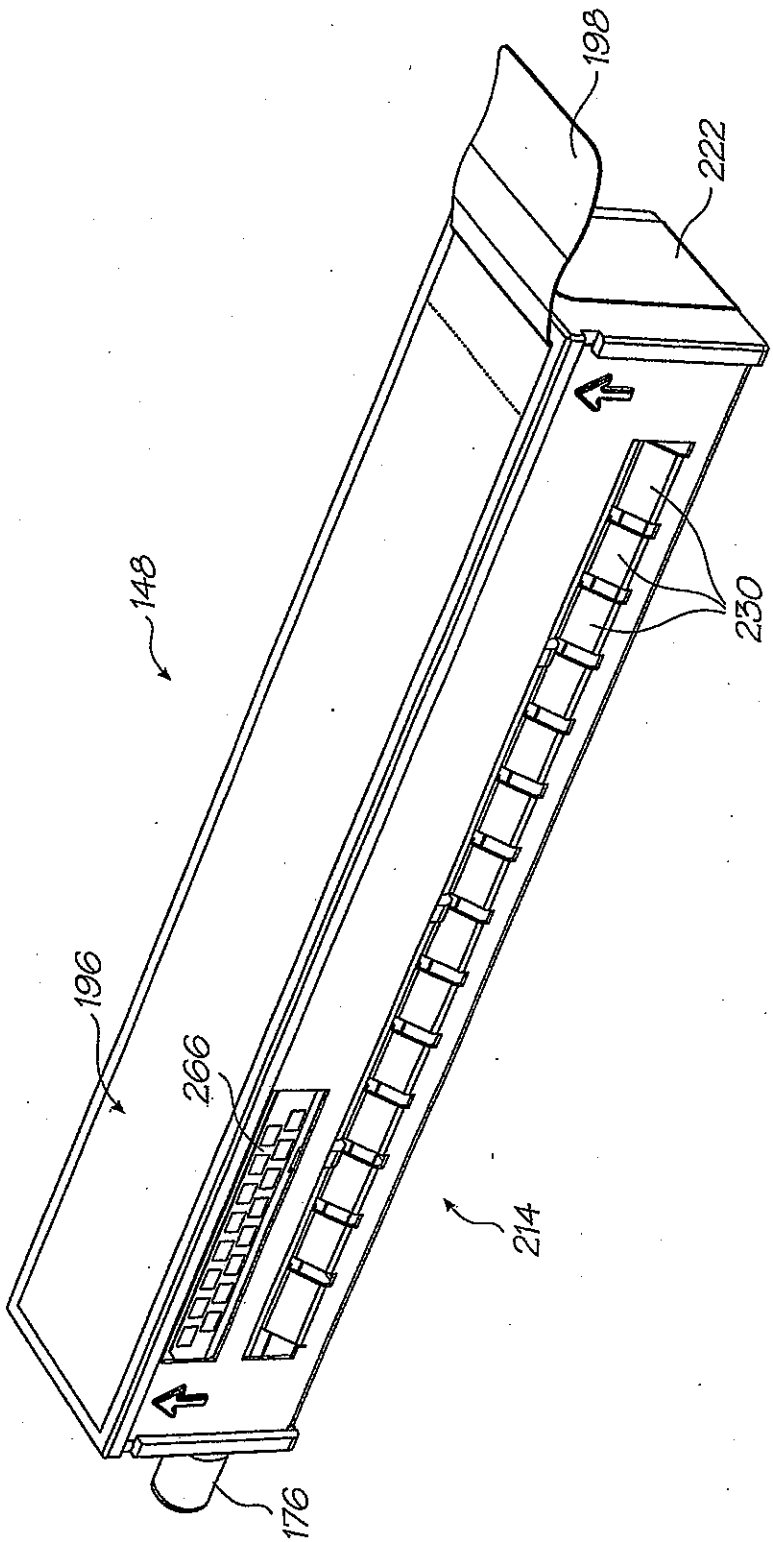

FIG. 30

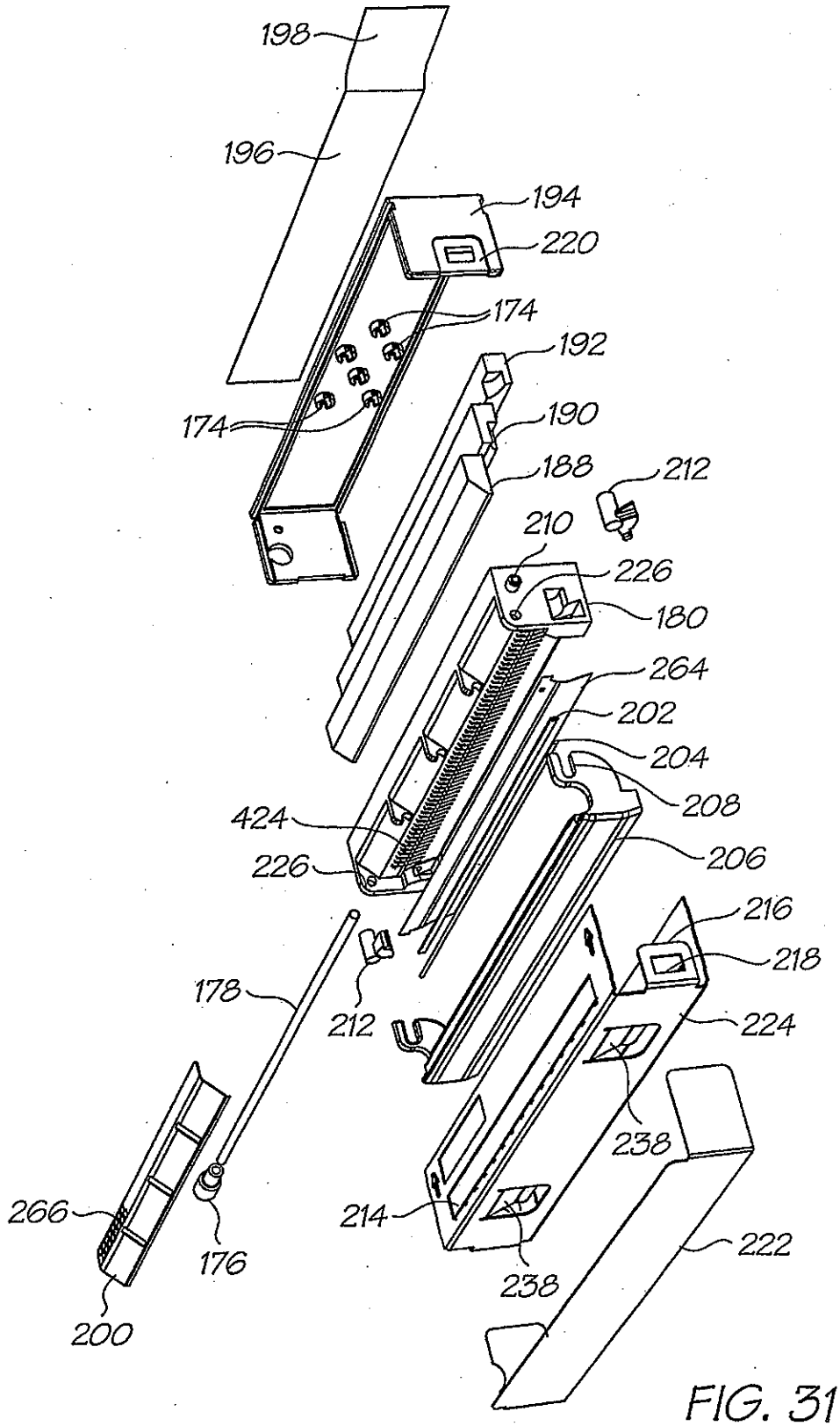
198
196
194
220
174
192
174
190
188
212
210
226
180
264
202
204
208
424
206
226
216
218
178
212
224
238
266
214
222
176
238
200

FIG. 31

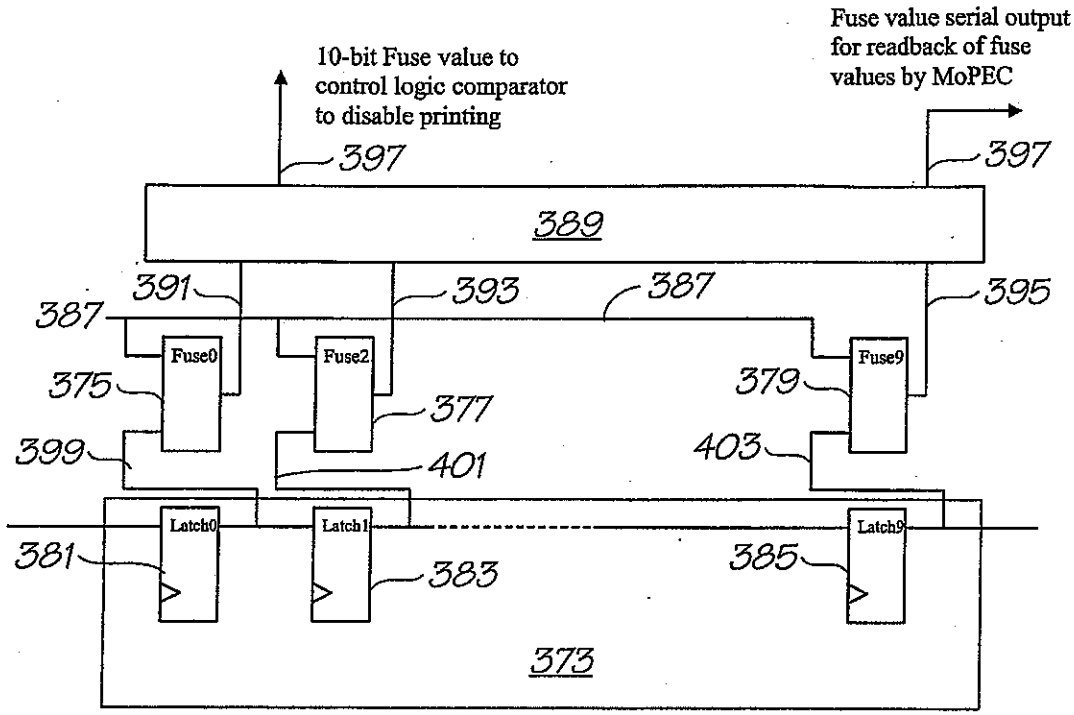
10-bit Fuse value to control logic comparator to disable printing
Fuse value serial output for readback of fuse values by MoPEC
397
397
389
391
393
387
395
387
Fuse0
Fuse2
Fuse9
375
377
379
399
401
403
Latch0
Latch1
Latch9
381
383
385
373

FIG. 32

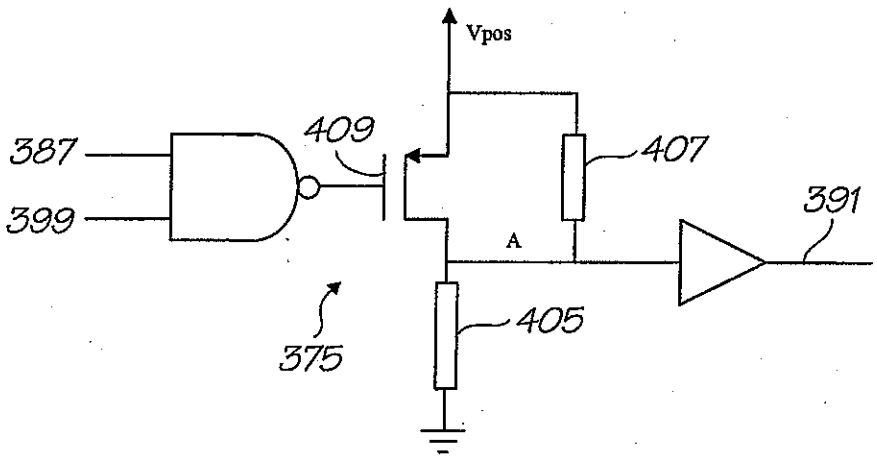
Vpos
409
407
387
399
391
A
375
405

FIG. 33

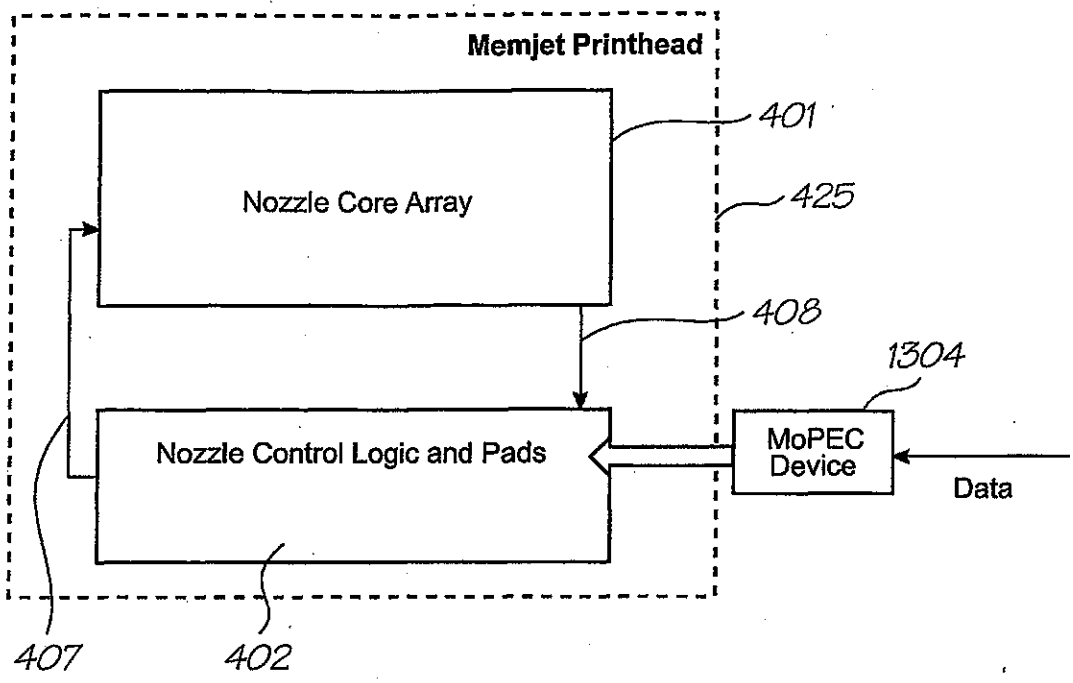
Memjet Printhead
401
Nozzle Core Array
425
408
1304
Nozzle Control Logic and Pads
MoPEC Device
Data
407
402

FIG. 34

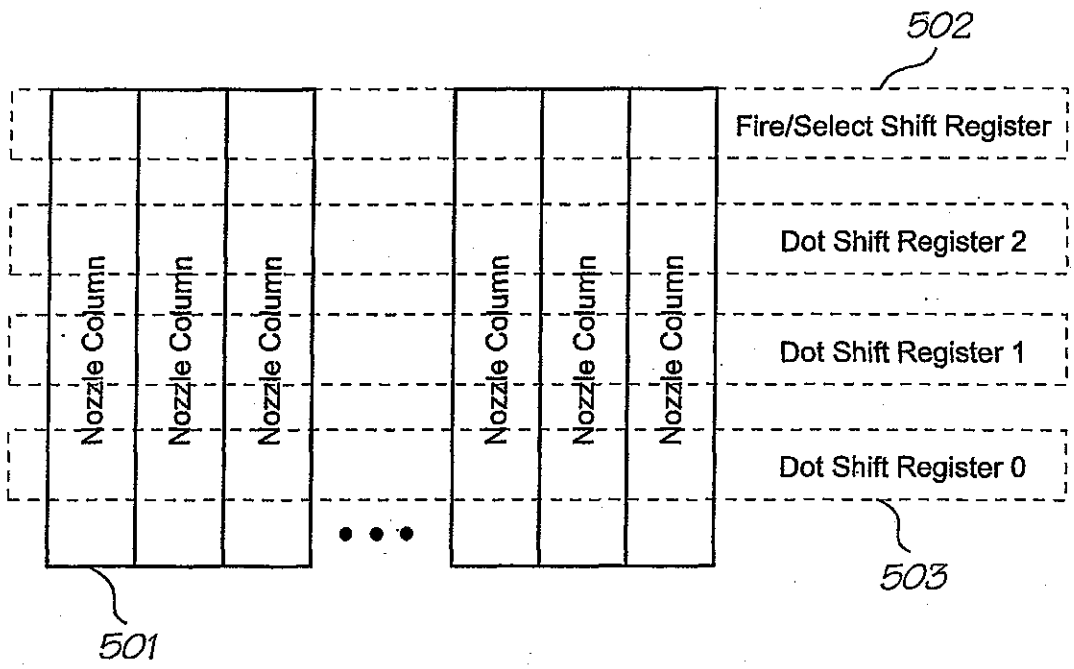
502
Fire/Select Shift Register
Dot Shift Register 2
Dot Shift Register 1
Dot Shift Register 0
Nozzle Column
Nozzle Column
Nozzle Column
Nozzle Column
Nozzle Column
Nozzle Column
503
501

FIG. 35

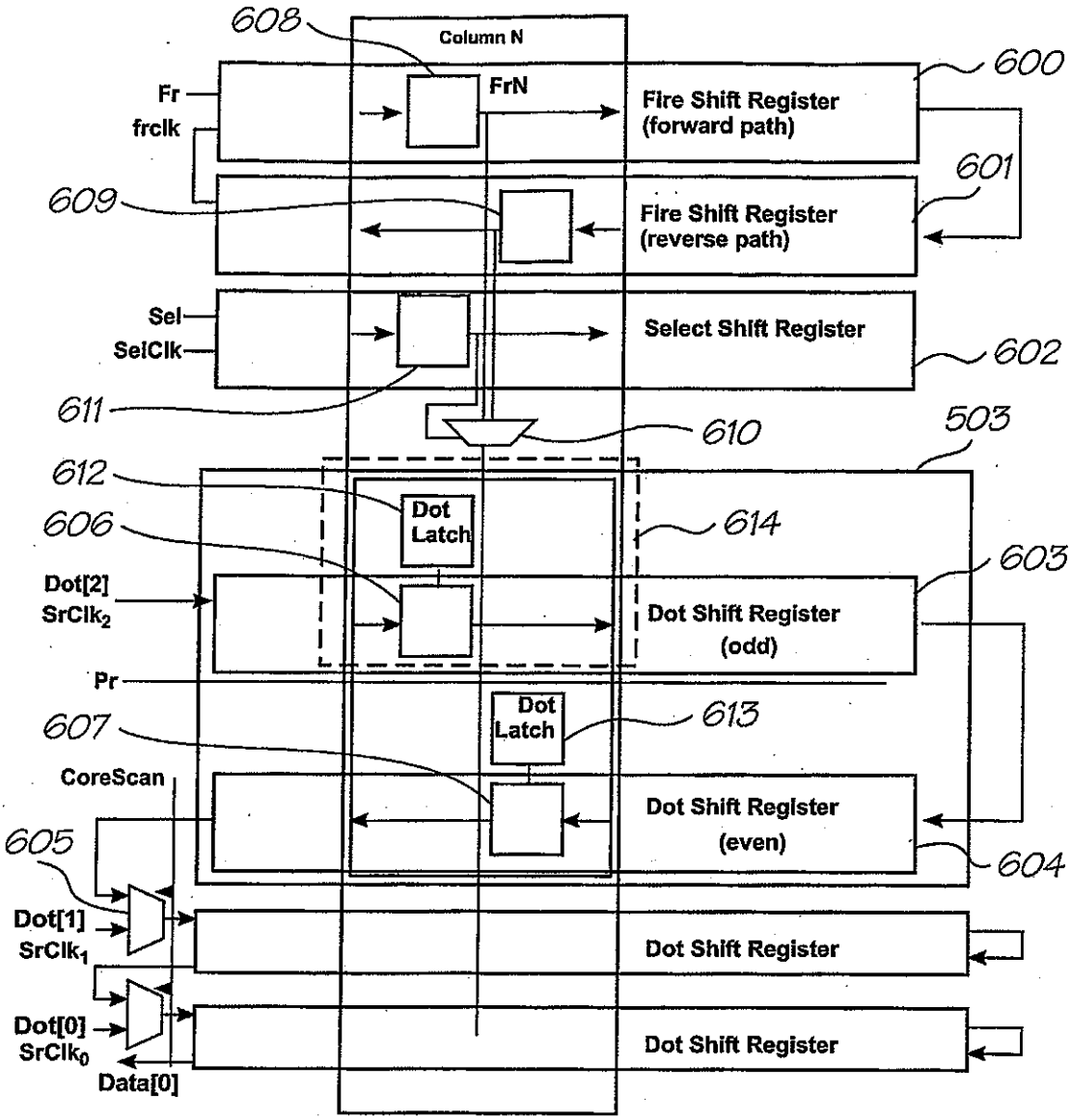
608
Column N
600
Fr
frclk
FrN
Fire Shift Register
(forward path)
601
609
Fire Shift Register
(reverse path)
Sel
SelClk
Select Shift Register
602
611
610
503
612
Dot
Latch
614
606
603
Dot[2]
SrClk2
Dot Shift Register
(odd)
Pr
Dot
Latch
613
607
CoreScan
Dot Shift Register
(even)
604
605
Dot[1]
SrClk1
Dot Shift Register
Dot[0]
SrClk0
Dot Shift Register
Data[0]

FIG. 36

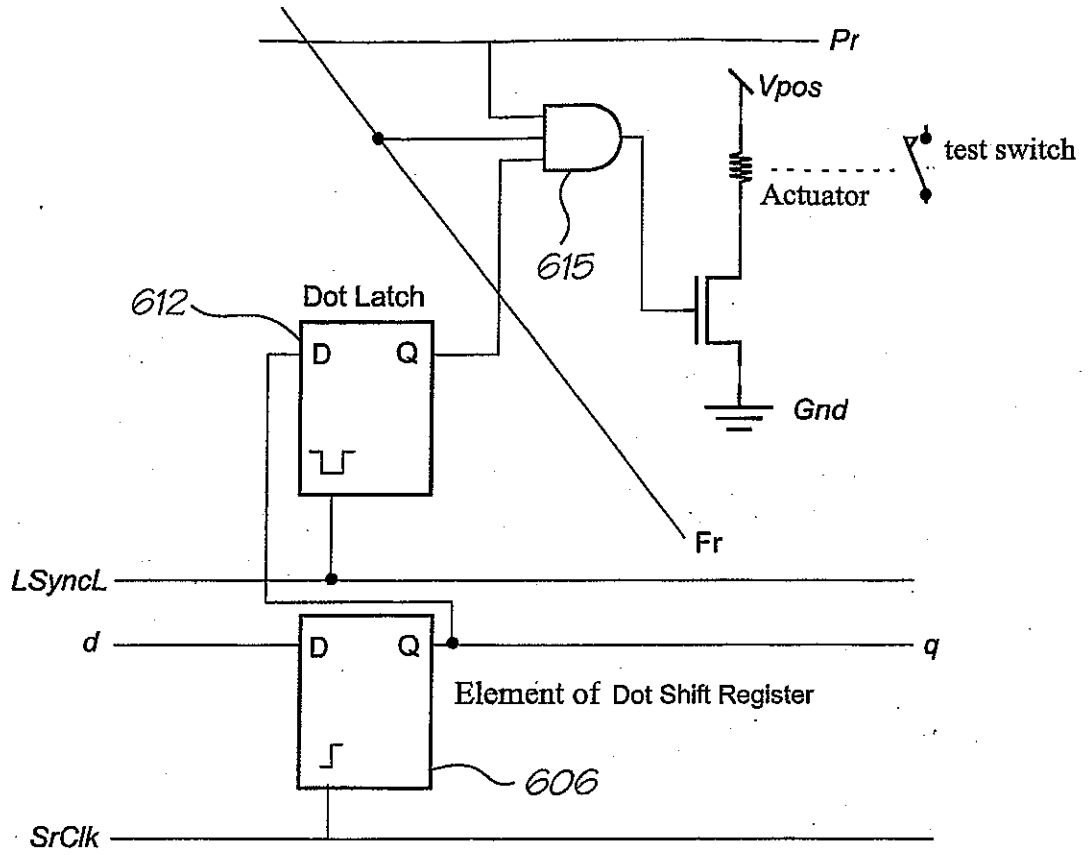
Pr
Vpos
test switch
Actuator
615
612
Dot Latch
D
Q
Gnd
Fr
LSyncL
d
D
Q
q
Element of Dot Shift Register
606
SrClk

FIG. 37

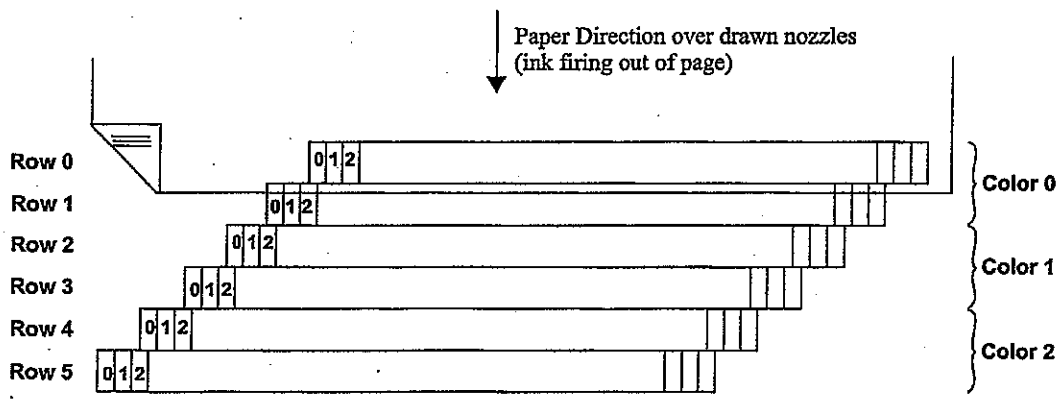
Paper Direction over drawn nozzles
(ink firing out of page)
Row 0
Row 1
Row 2
Row 3
Row 4
Row 5
0 1 2
Color 0
Color 1
Color 2

FIG. 38

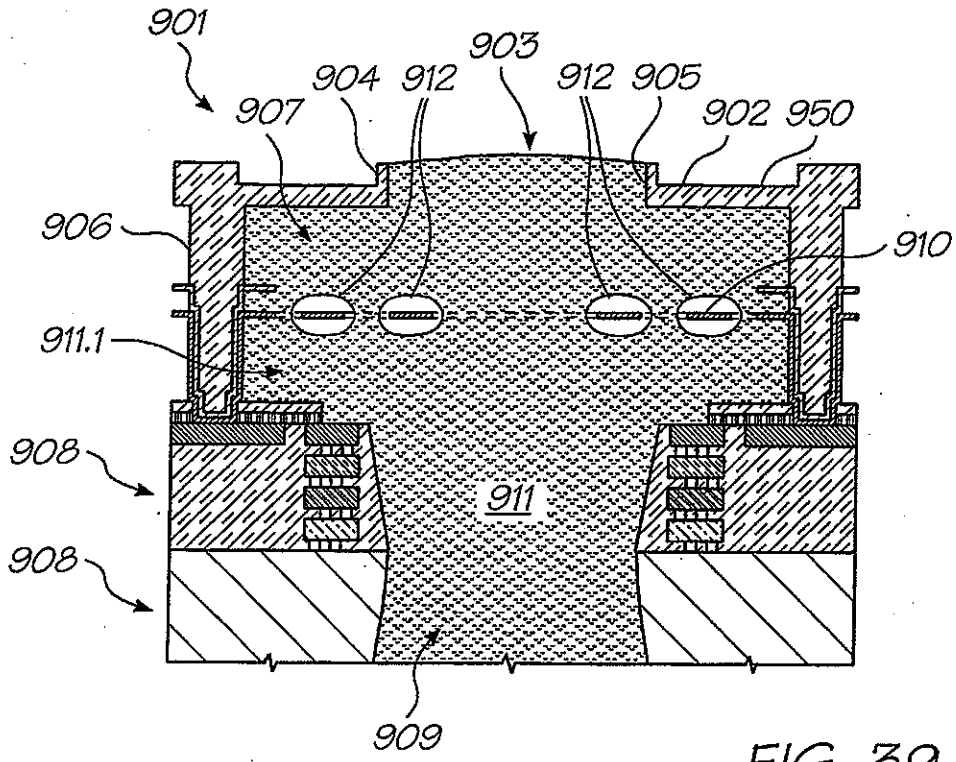
901
907
904
912
903
912
905
902
950
906
910
911.1
908
911
908
909

FIG. 39

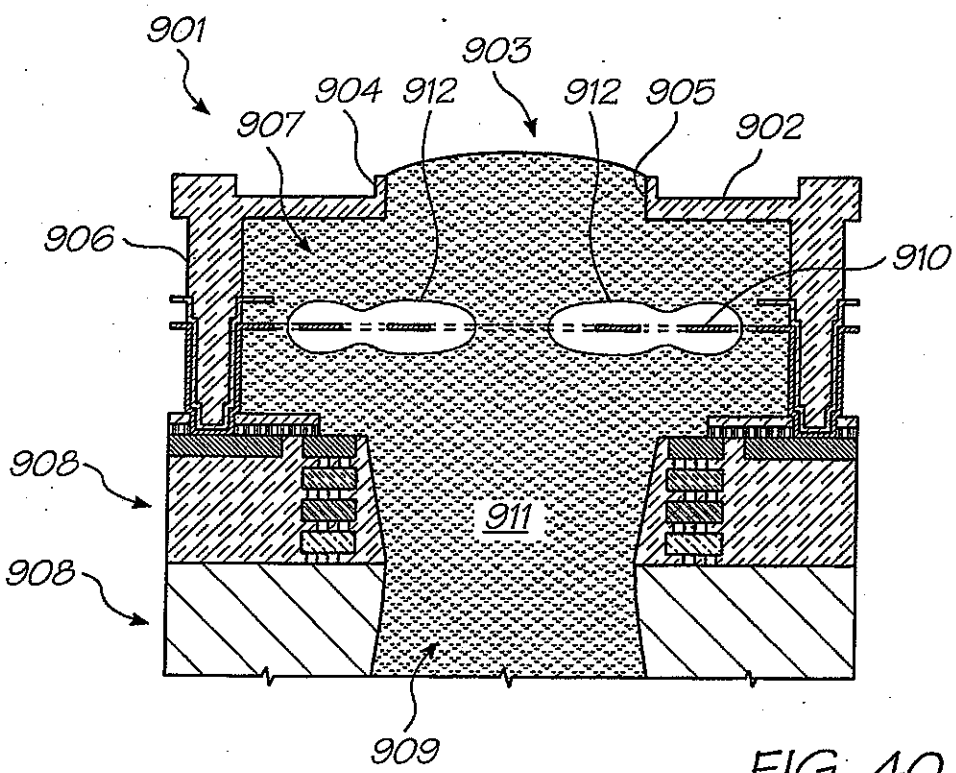
901
907
904
912
903
912
905
902
906
910
908
911
908
909

FIG. 40

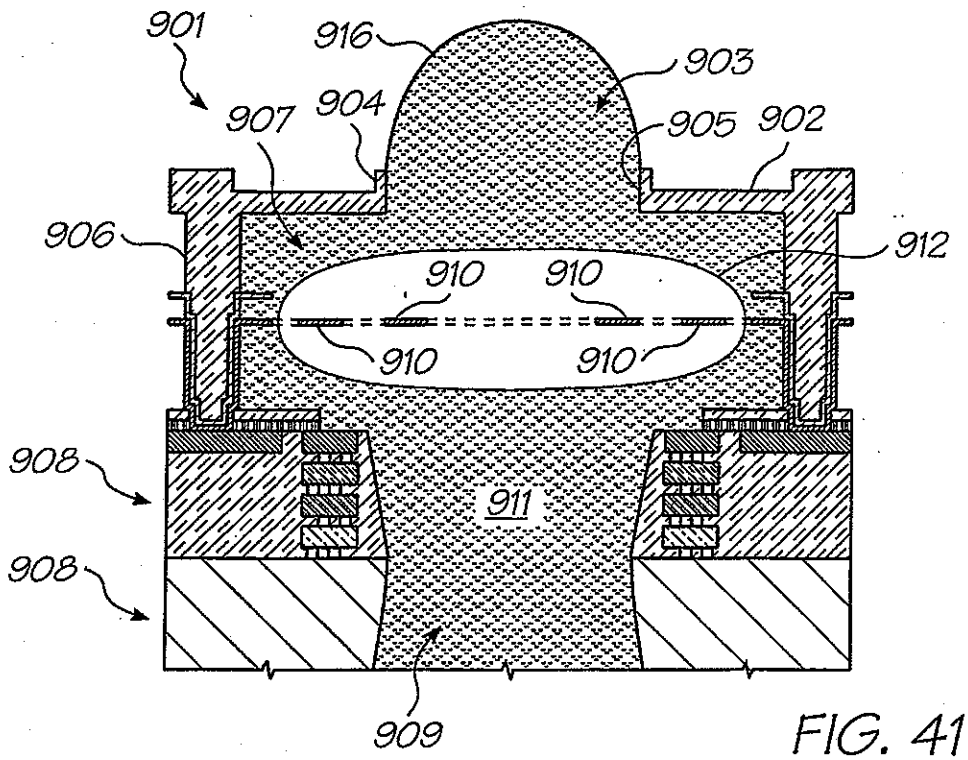
901
916
903
907
904
905
902
906
912
910
910
910
910
908
911
908
909

FIG. 41

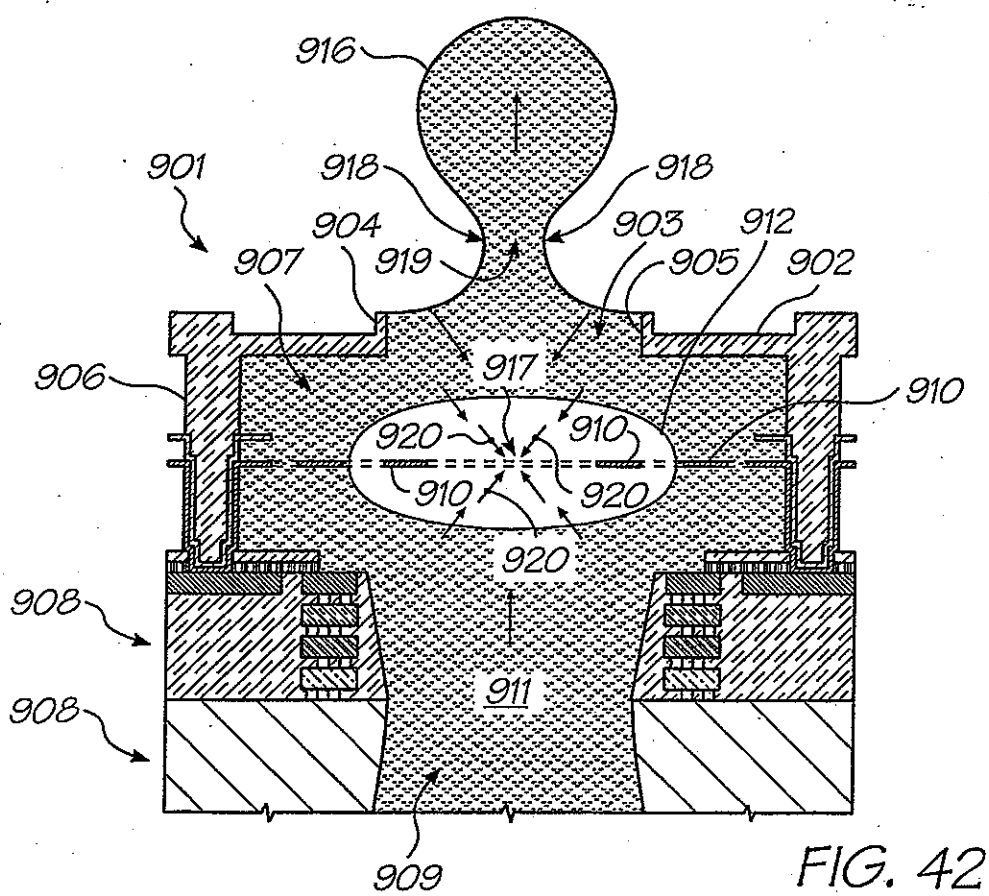
916
901
918
918
904
903
912
907
919
905
902
917
906
910
920
910
910
920
920
908
911
908
909

FIG. 42

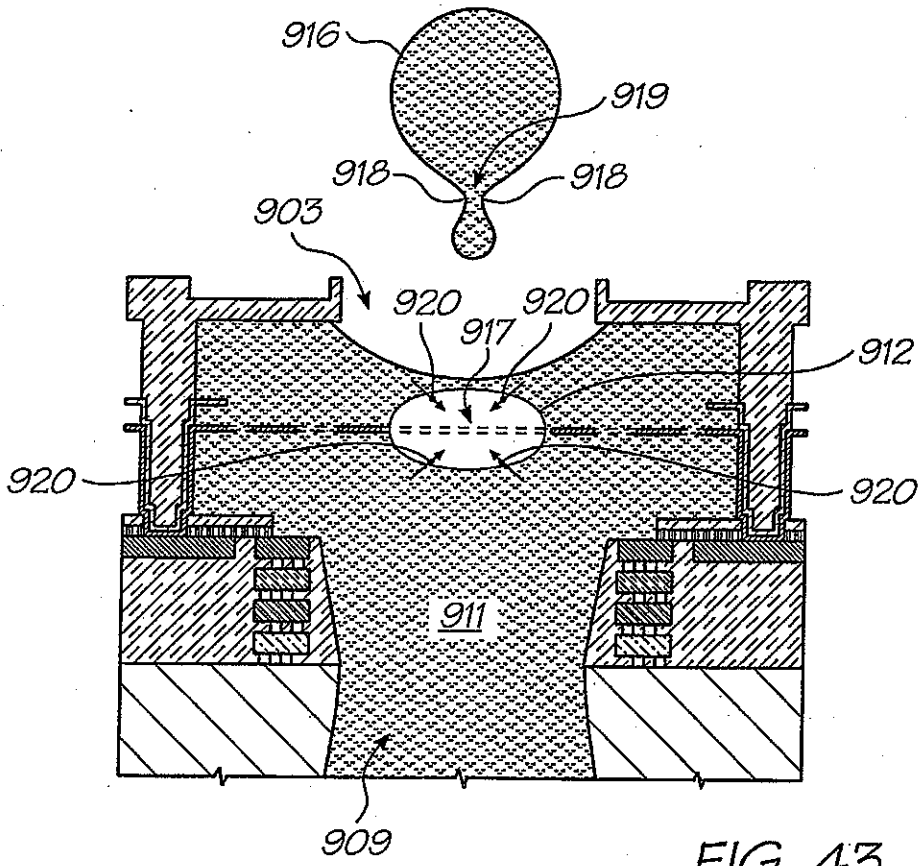

FIG. 43

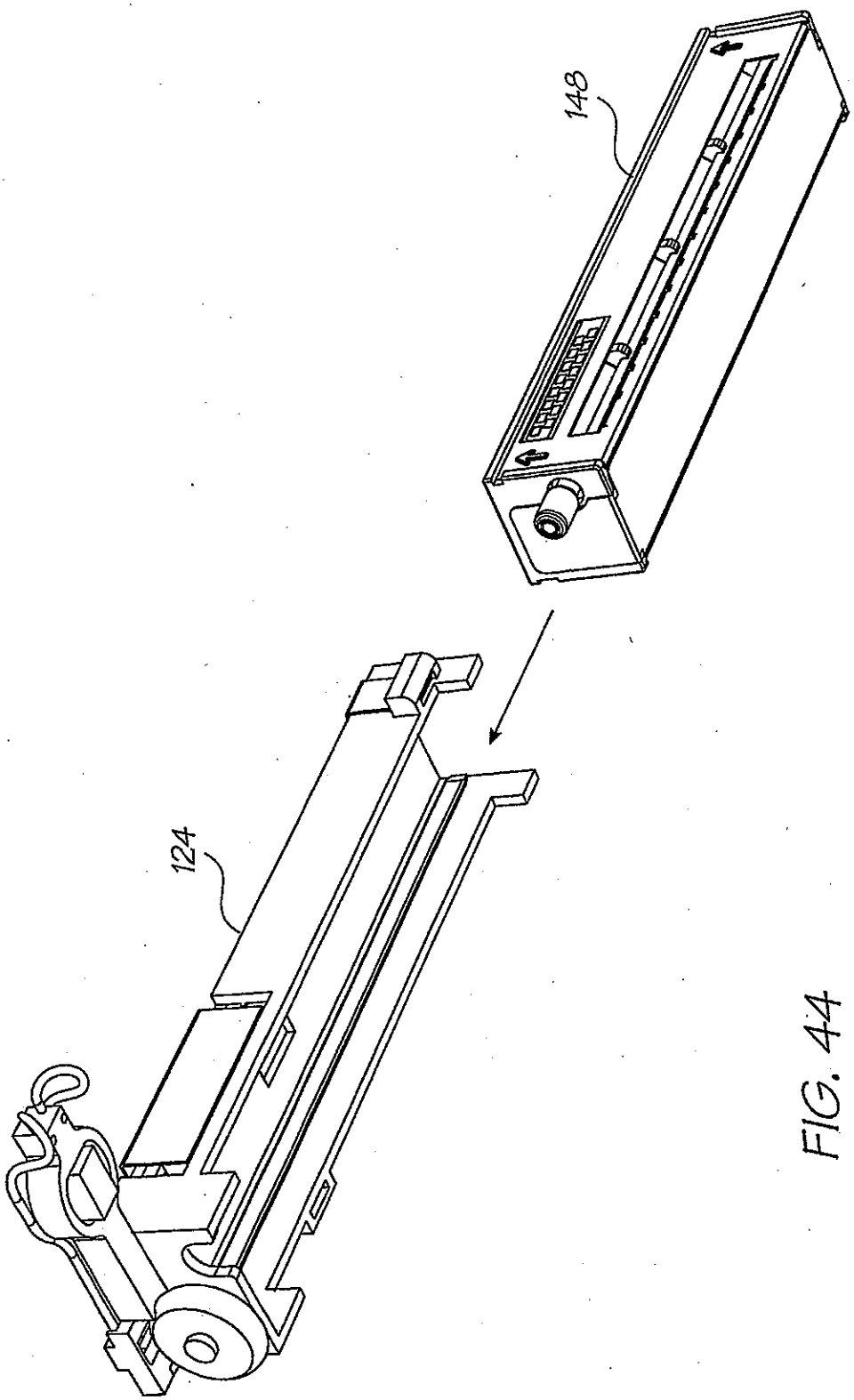

FIG. 44

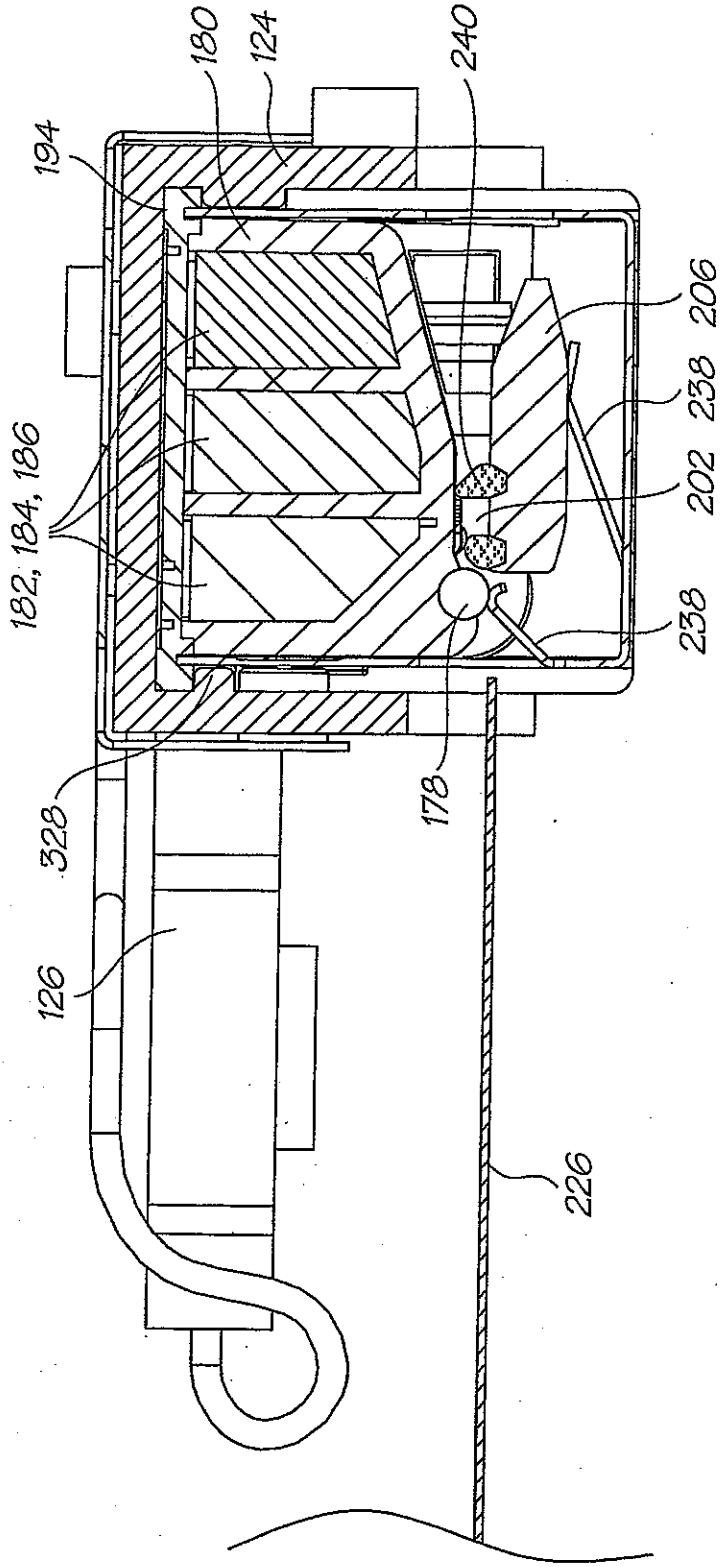

FIG. 45

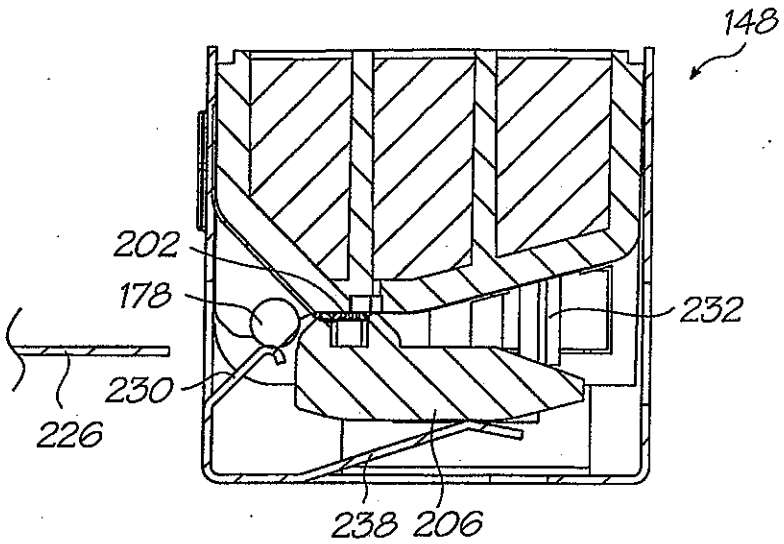

FIG. 46

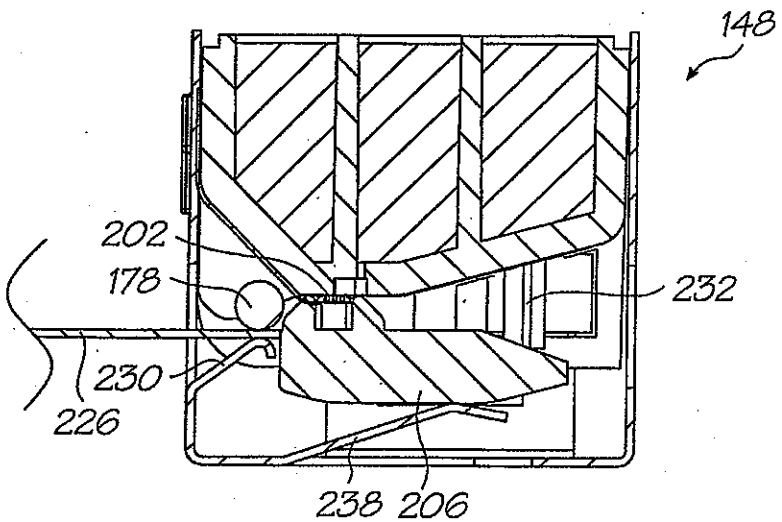

FIG. 47

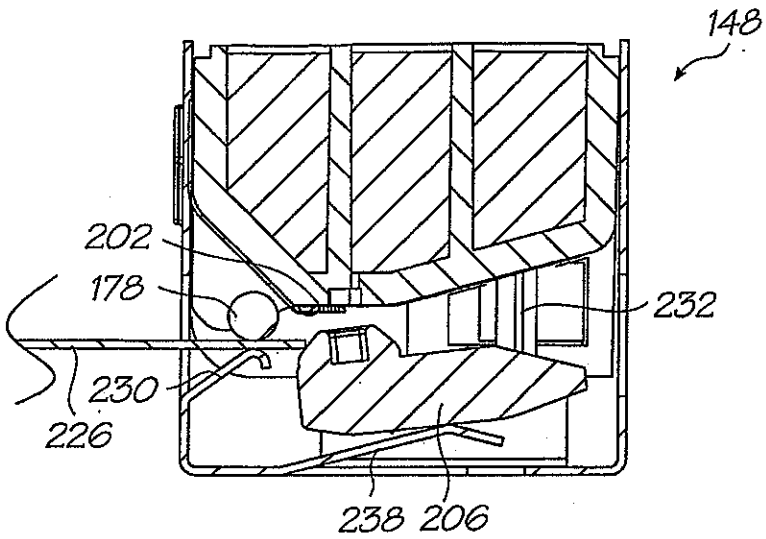

FIG. 48

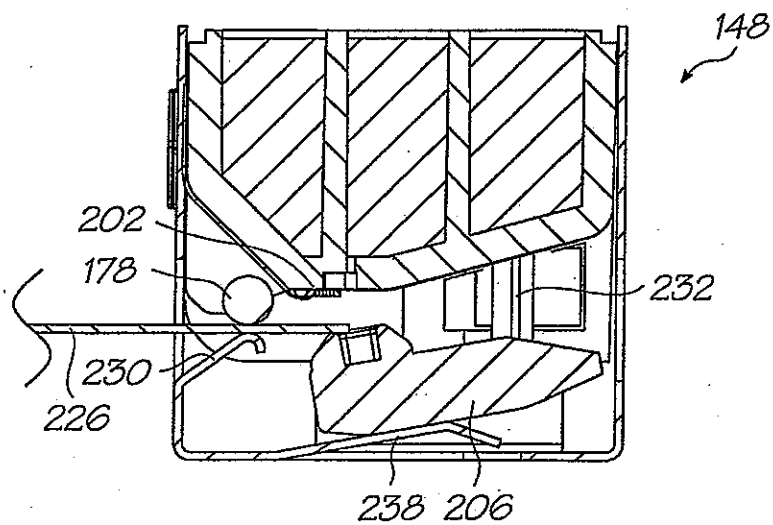

FIG. 49

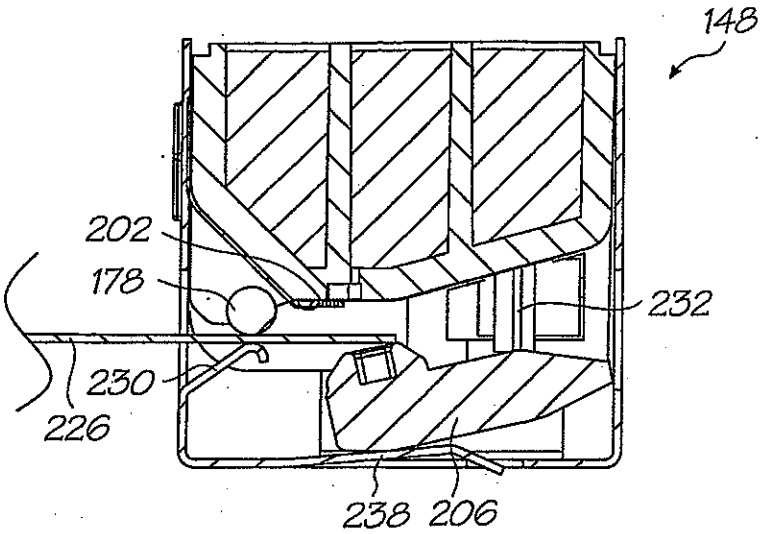

FIG. 50

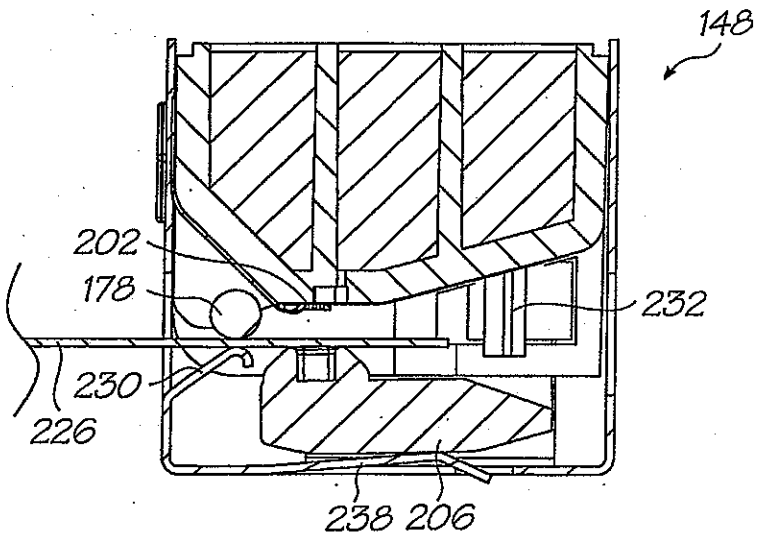

FIG. 51

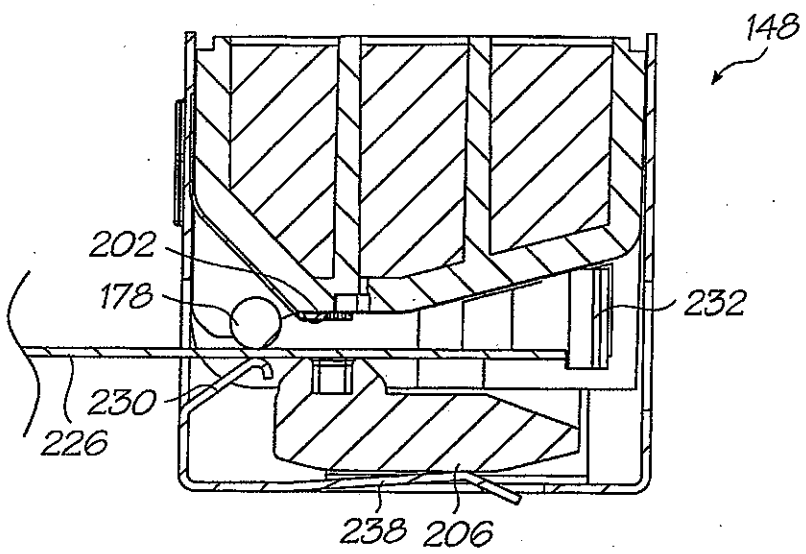

FIG. 52

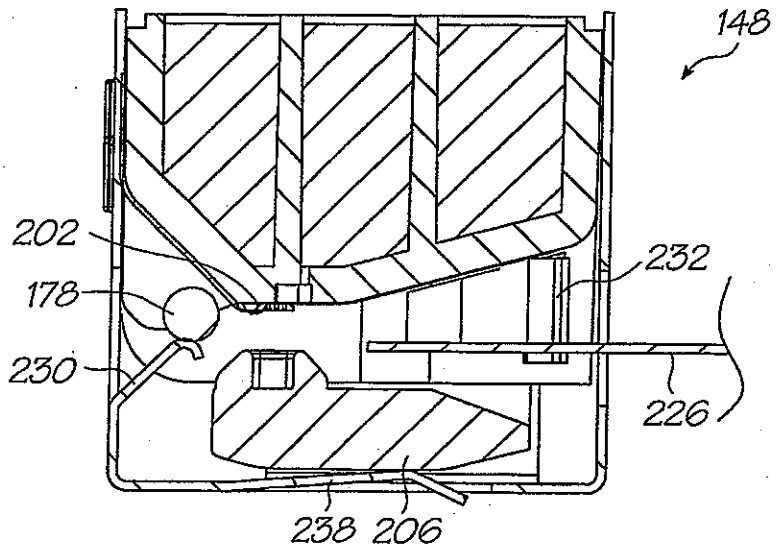

FIG. 53

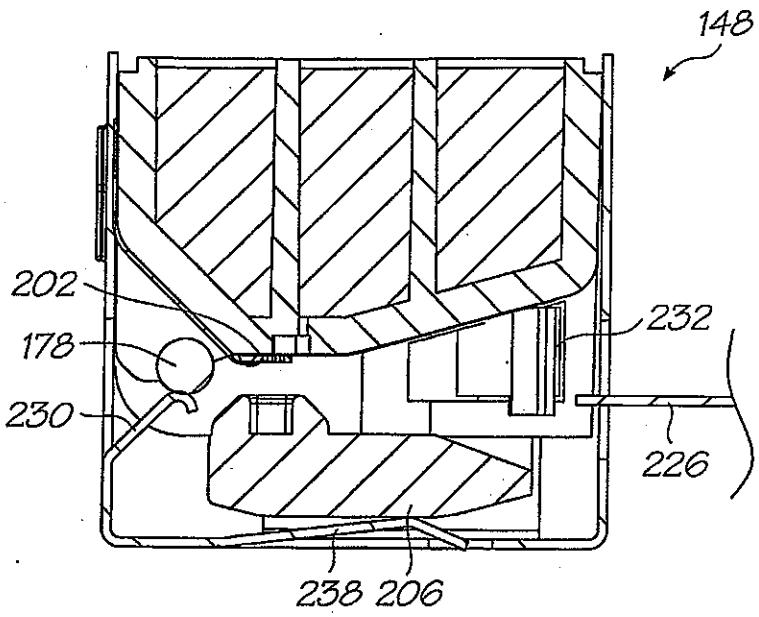

FIG. 54

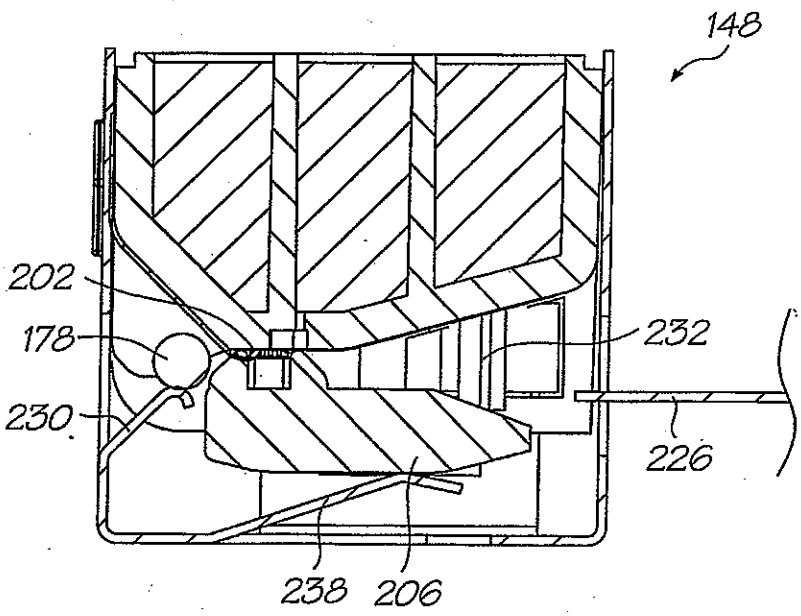

FIG. 55

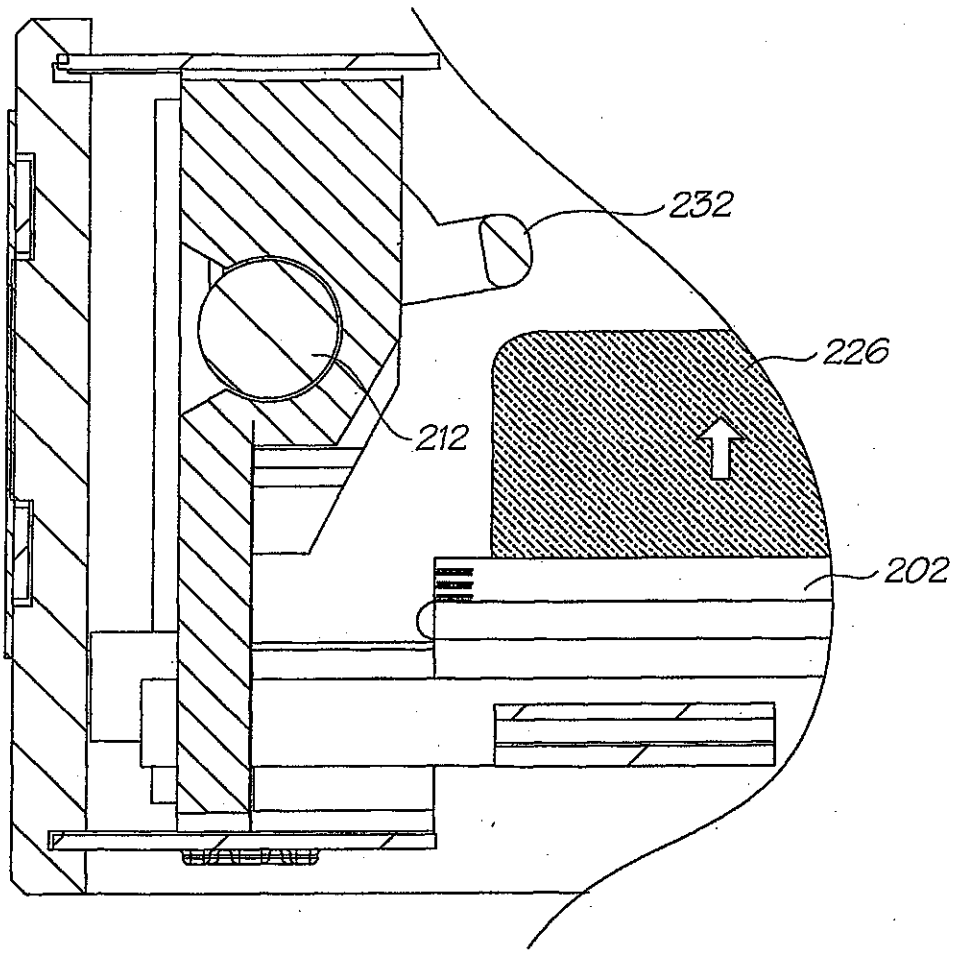

FIG. 56

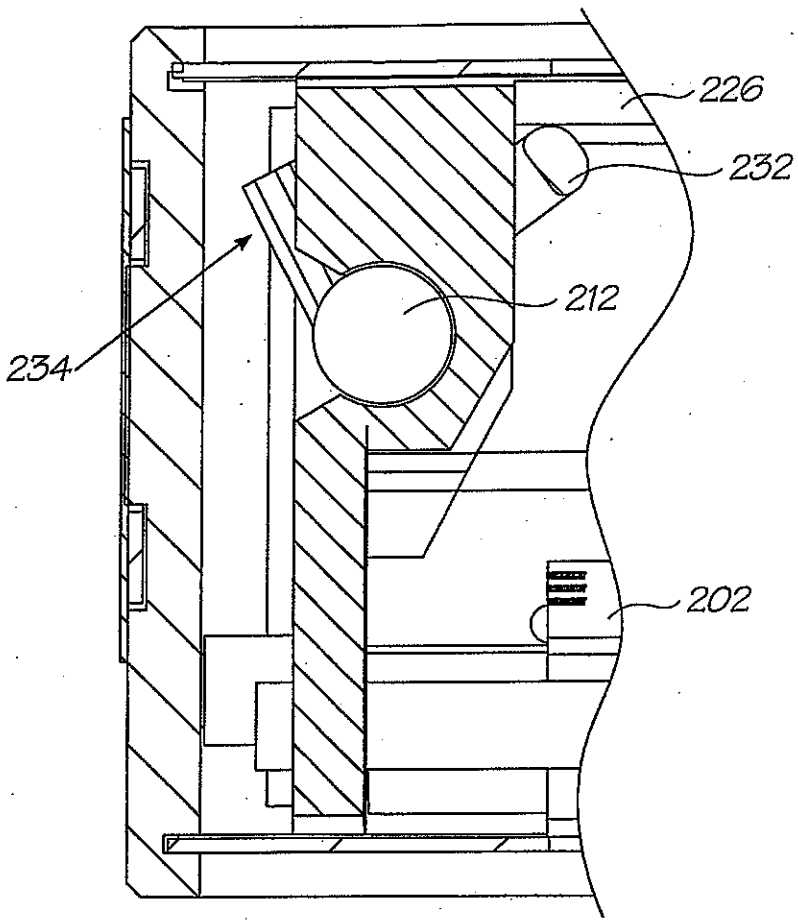

FIG. 57

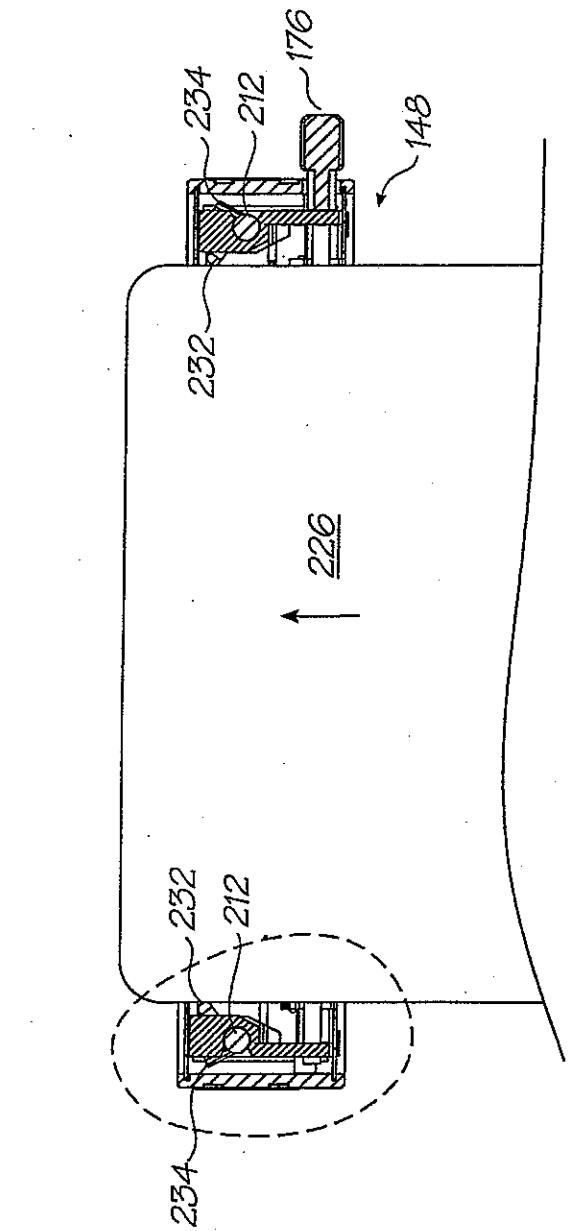

FIG. 58B

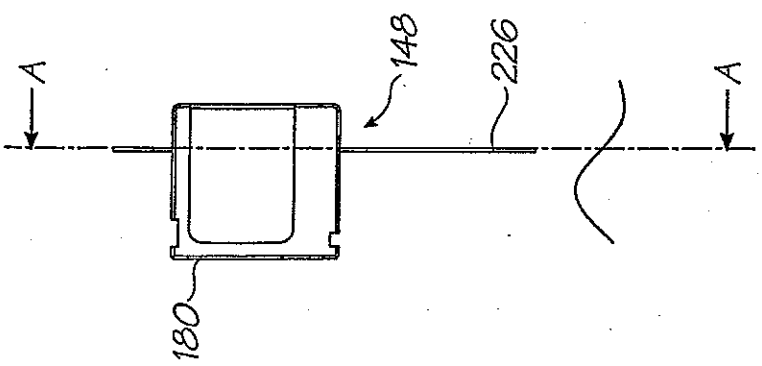

FIG. 58A

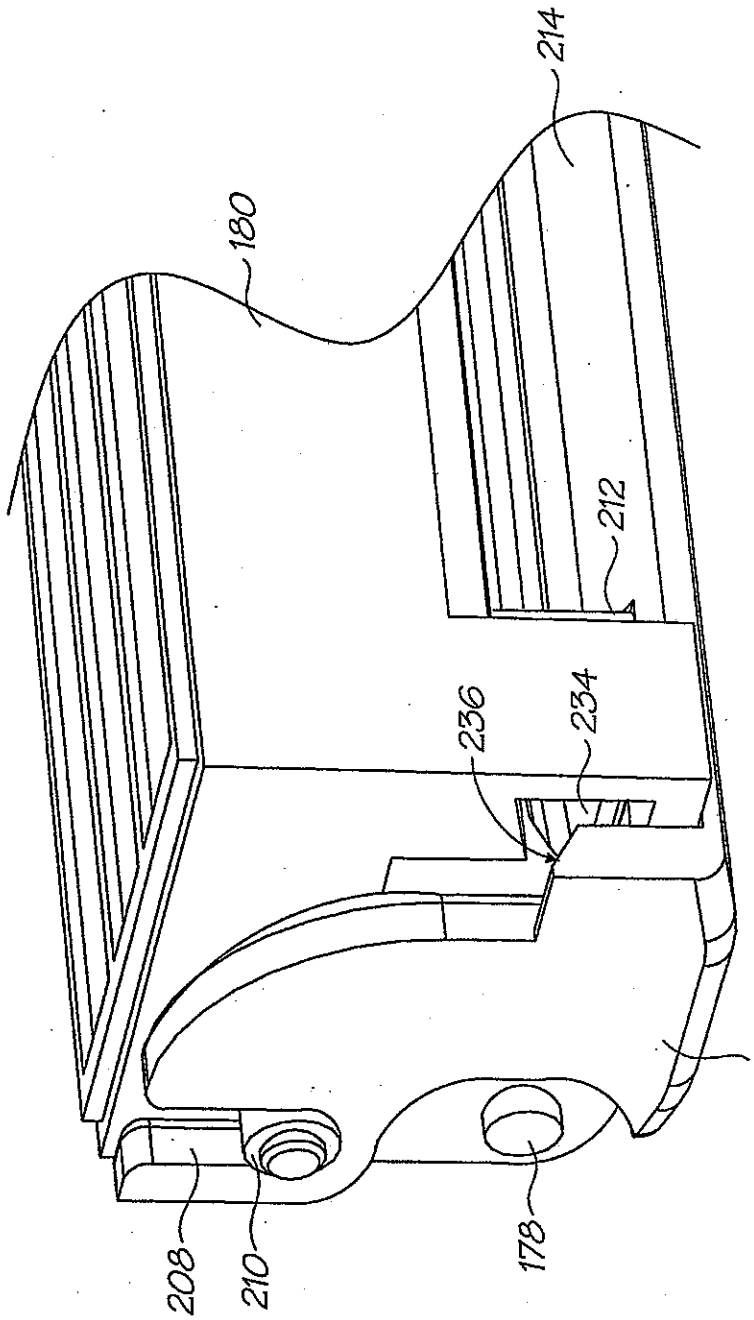

FIG. 59

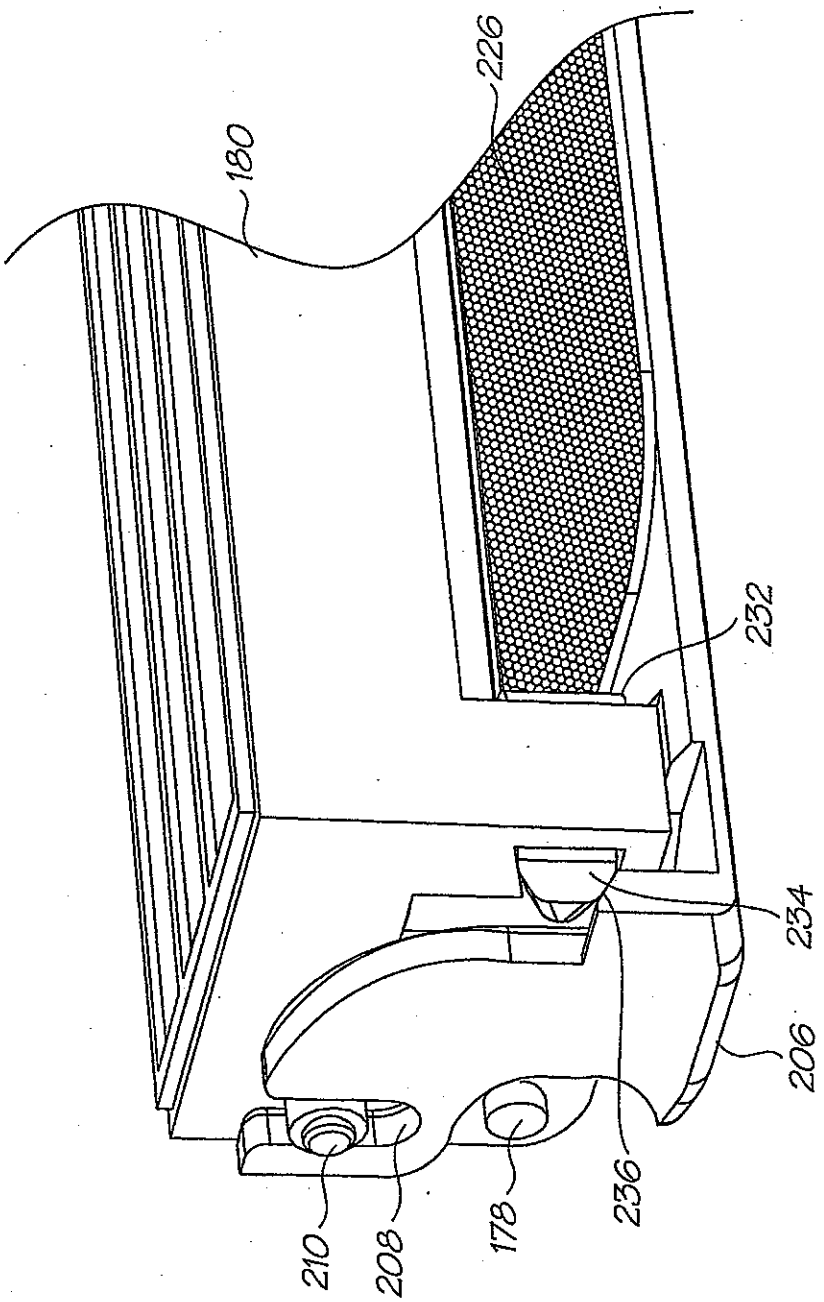

FIG. 60

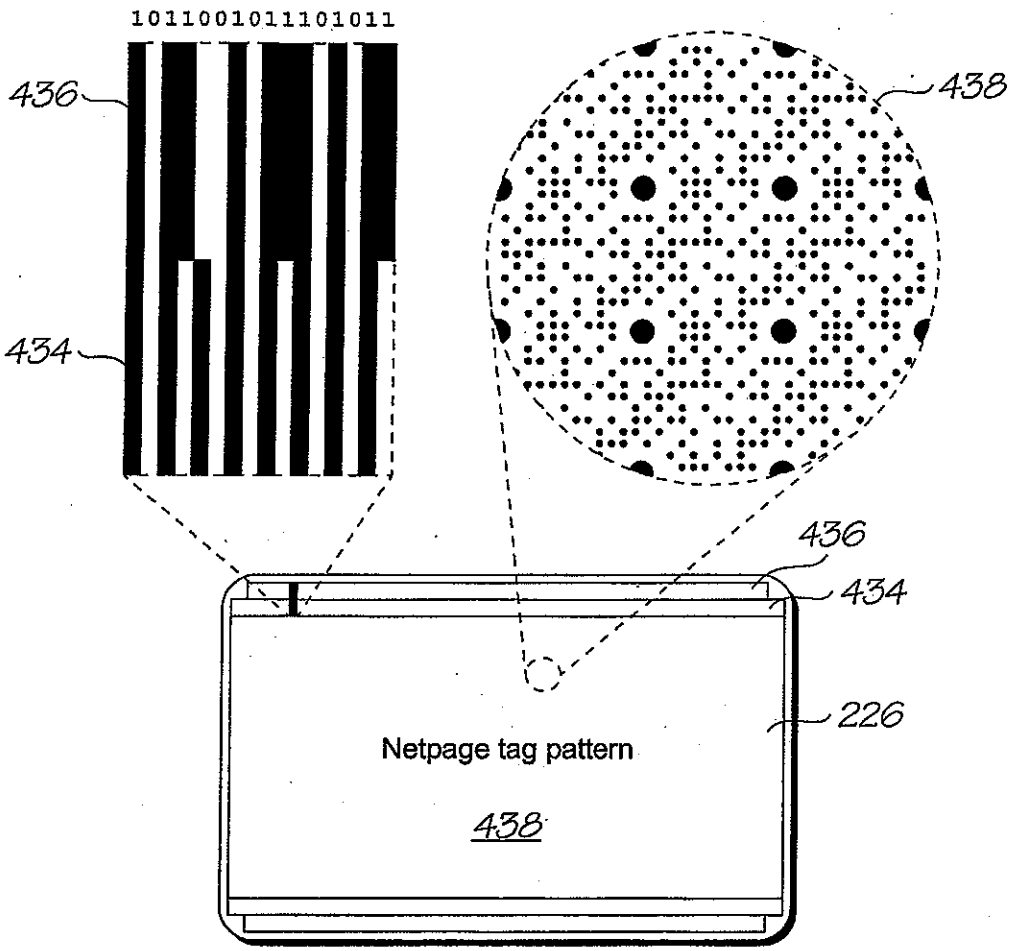
1011001011101011
436
434
438
436
434
226
Netpage tag pattern
438

FIG. 61

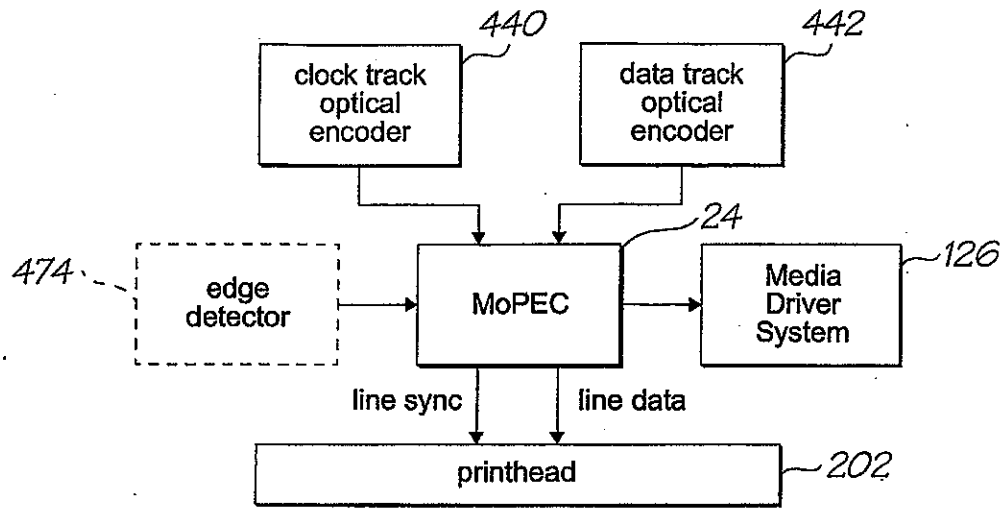
440
clock track optical encoder
442
data track optical encoder
24
474
edge detector
MoPEC
Media Driver System
126
line sync
line data
printhead
202

FIG. 62

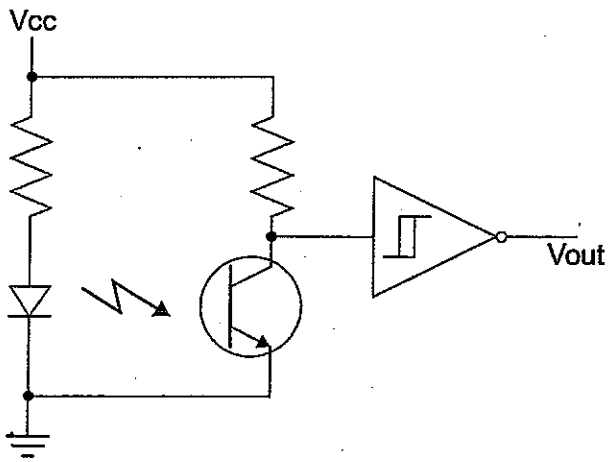
Vcc
Vout

FIG. 63

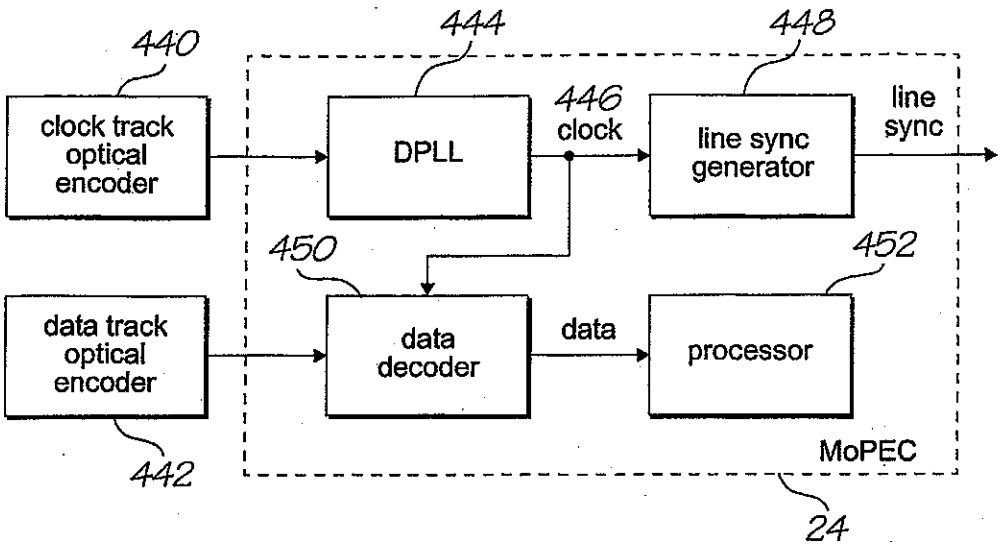
440
444
448
clock track optical encoder
DPLL
446 clock
line sync generator
line sync
450
452
data track optical encoder
data decoder
data
processor
MoPEC
442
24

FIG. 64

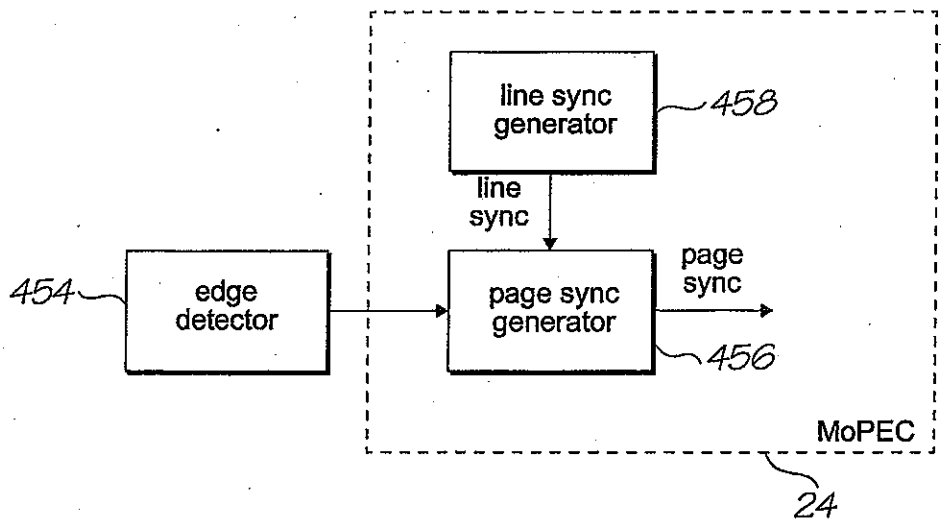
line sync generator
458
line sync
454
edge detector
page sync generator
page sync
456
MoPEC
24

FIG. 65

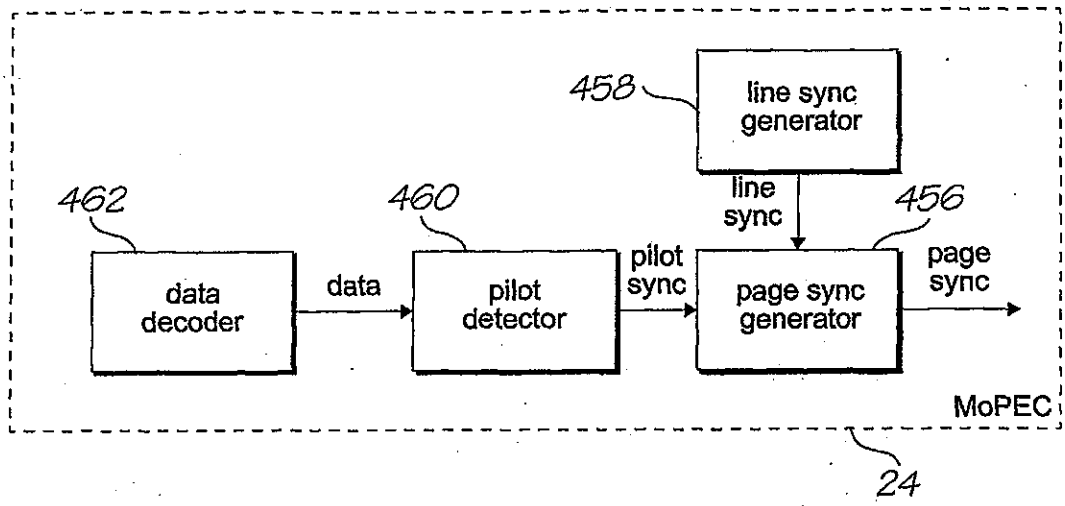
458
line sync generator
line sync
462
460
456
data decoder
data
pilot detector
pilot sync
page sync generator
page sync
MoPEC
24

FIG. 66

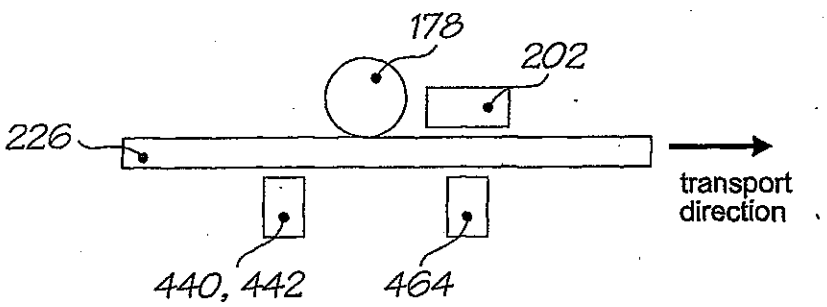
178
202
226
transport direction
440, 442
464

FIG. 67

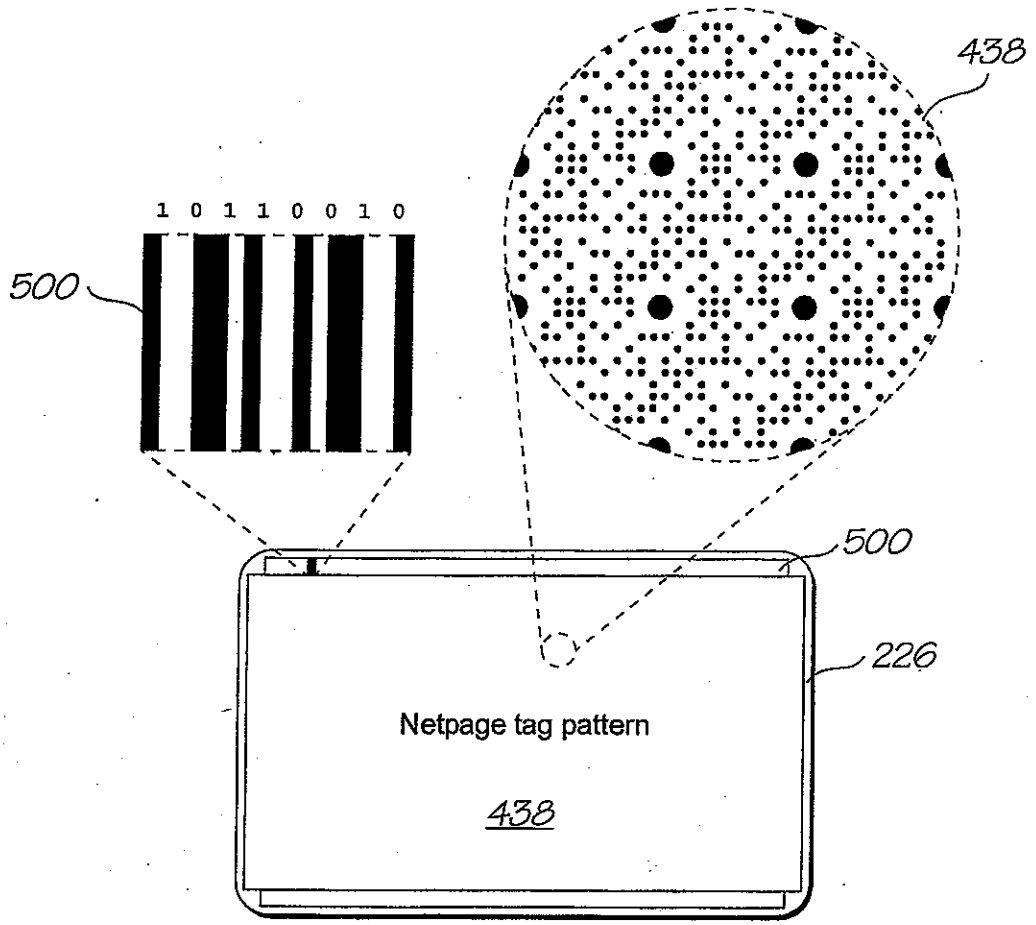

FIG. 68

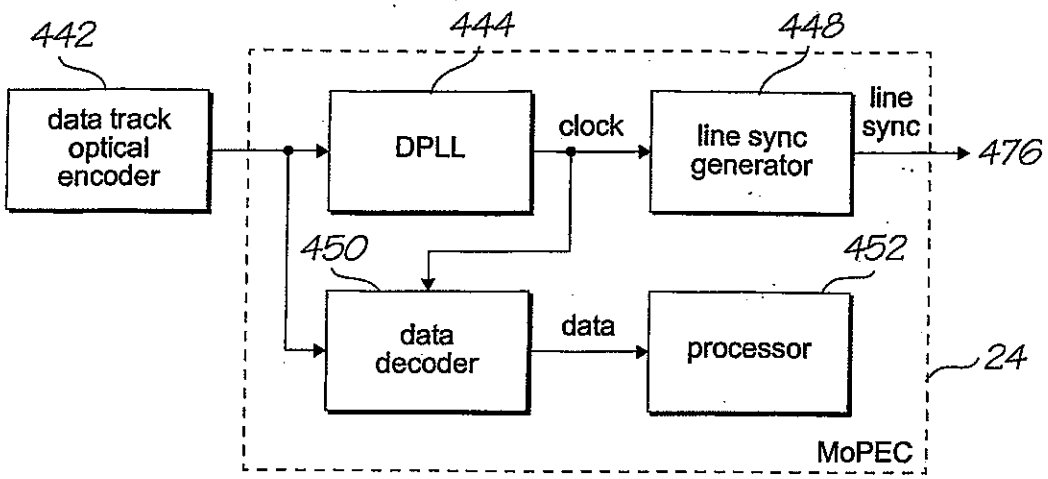
442
444
448
data track optical encoder
DPLL
clock
line sync generator
line sync
476
450
452
data decoder
data
processor
24
MoPEC

FIG. 69

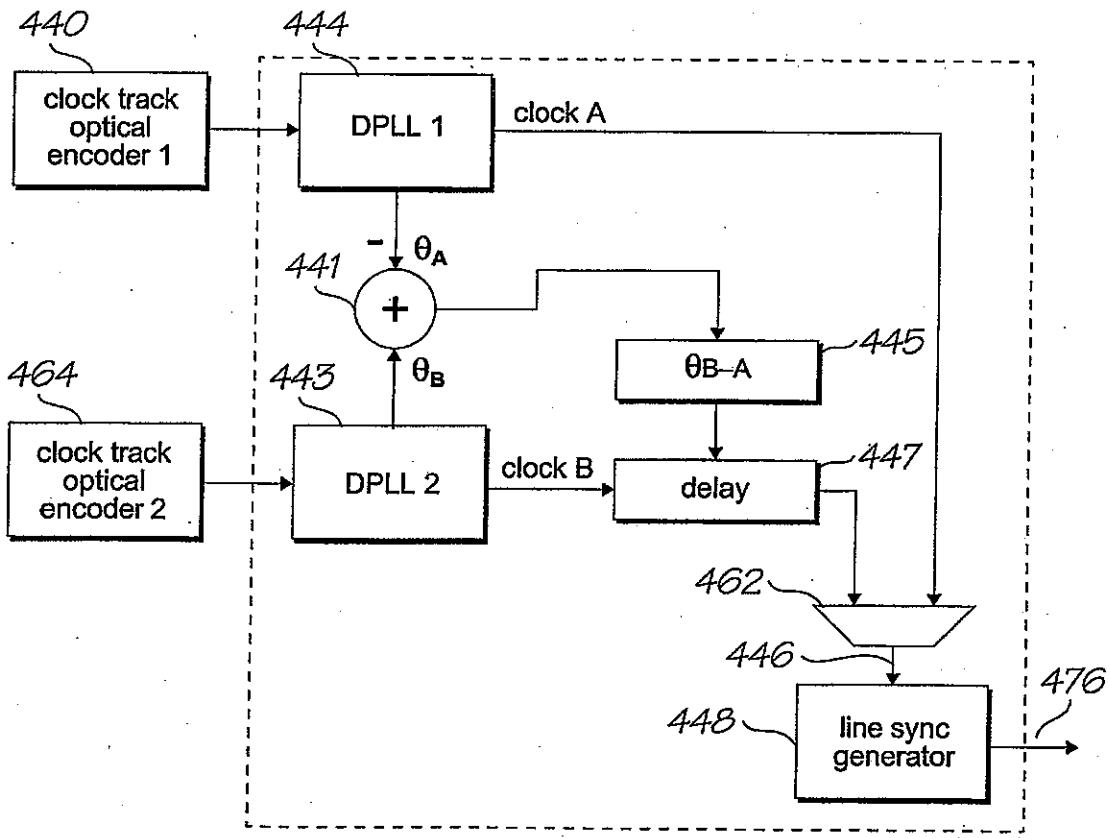
440
444
clock track optical encoder 1
DPLL 1
clock A
-
θA
441
+
θB
θB–A
445
464
443
clock track optical encoder 2
DPLL 2
clock B
delay
447
462
446
476
448
line sync generator

FIG. 70

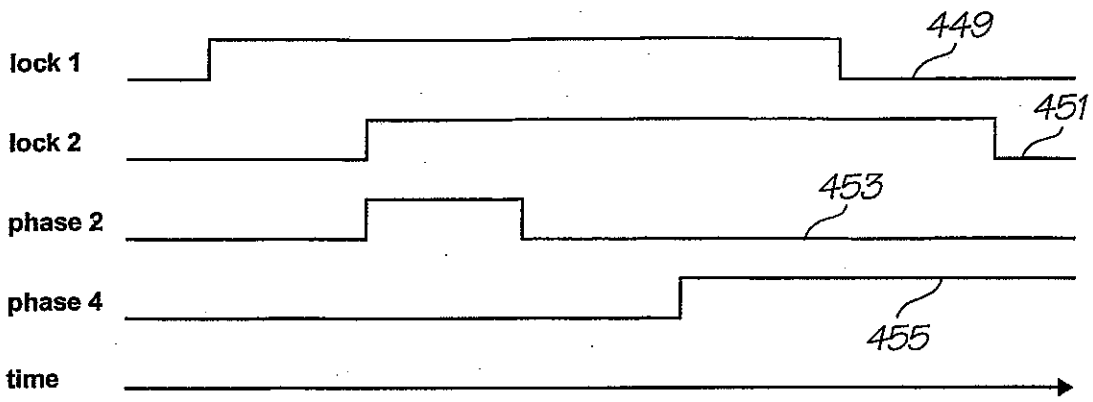

FIG. 71

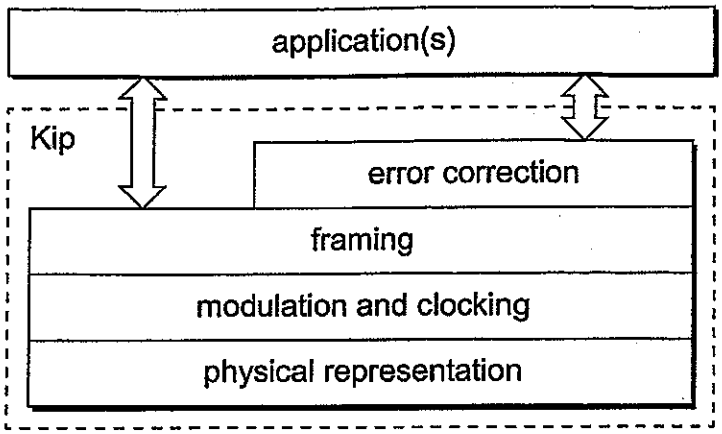

FIG. 72

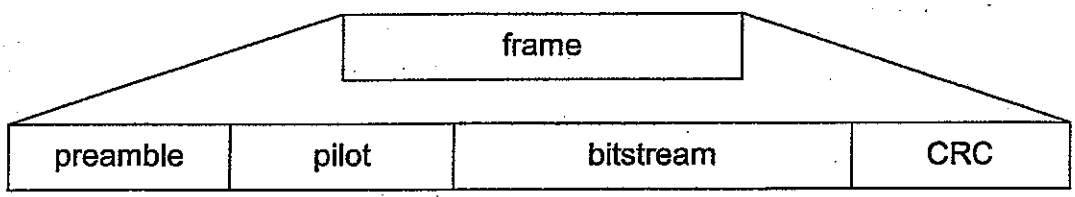

FIG. 73

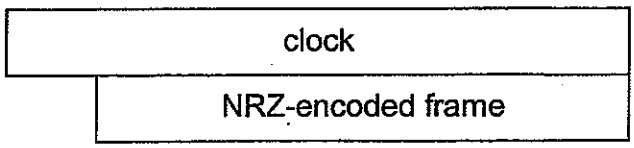

FIG. 74

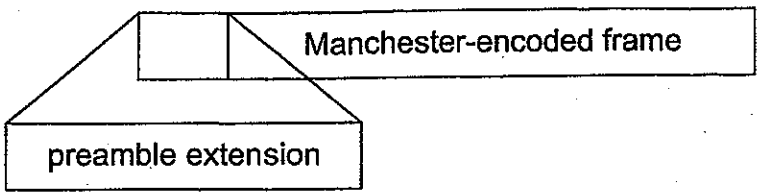

FIG. 75

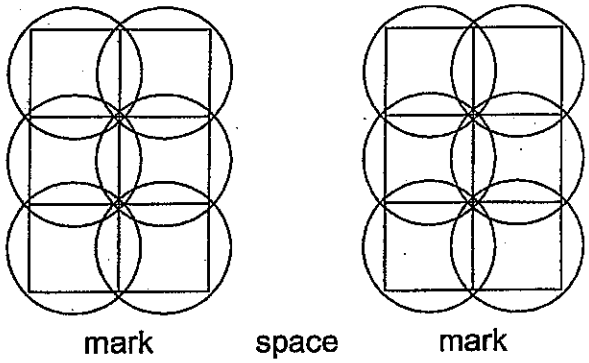

FIG. 76

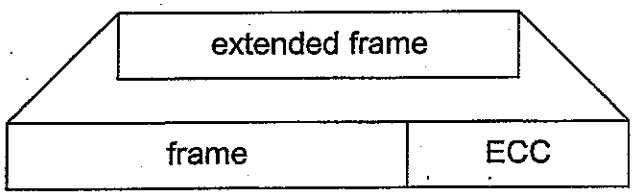

FIG. 77

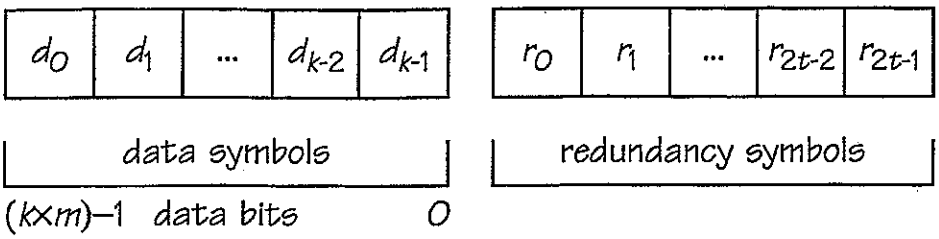

FIG. 78

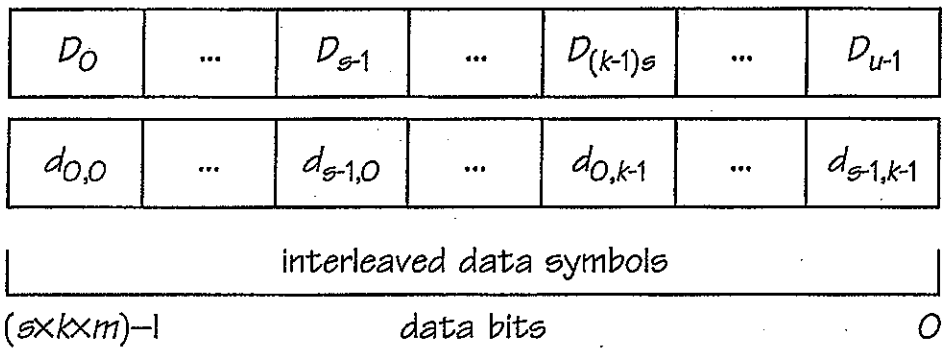

FIG. 79

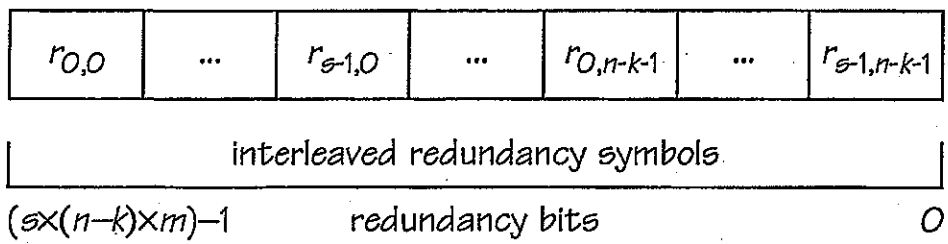

FIG. 80

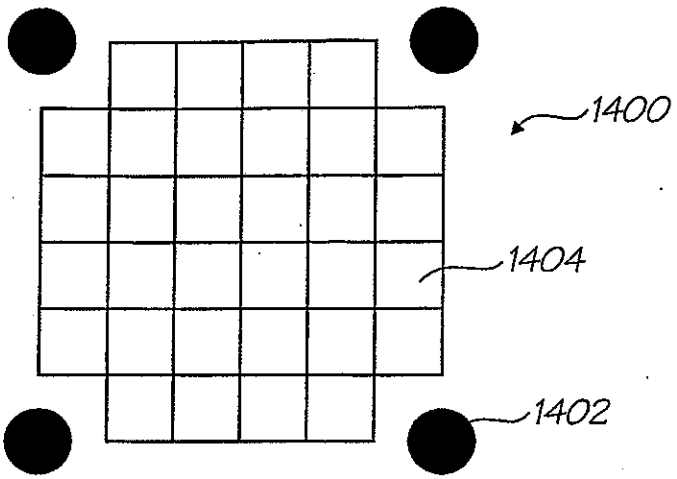

FIG. 81

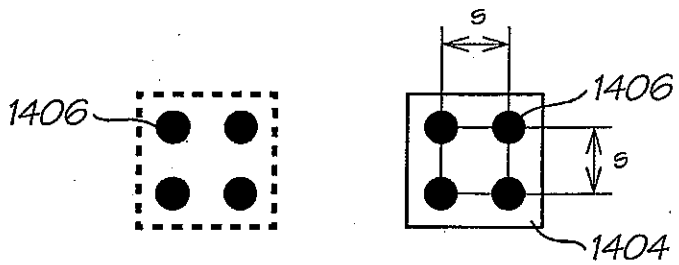

FIG. 82

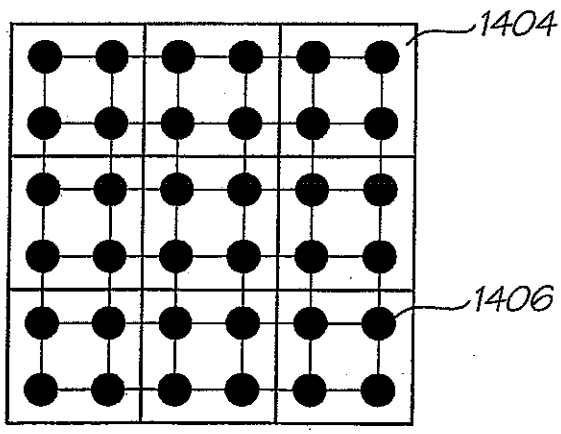

FIG. 83

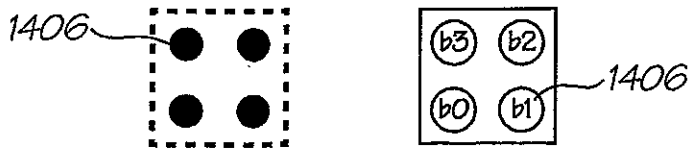

FIG. 84

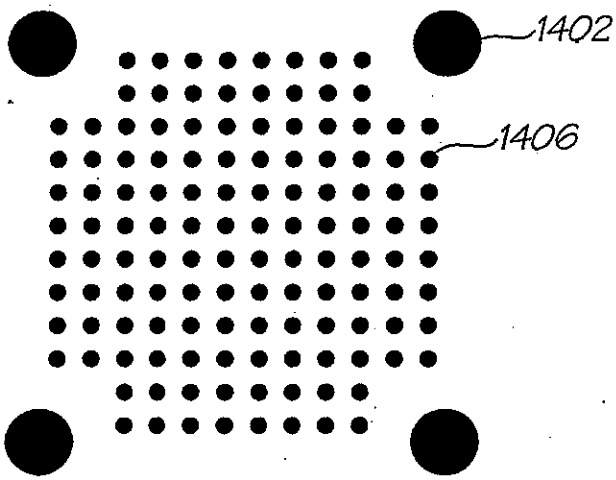

FIG. 85

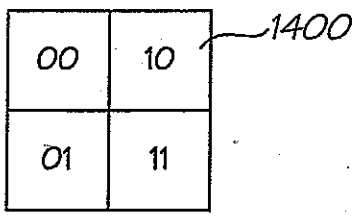

FIG. 86

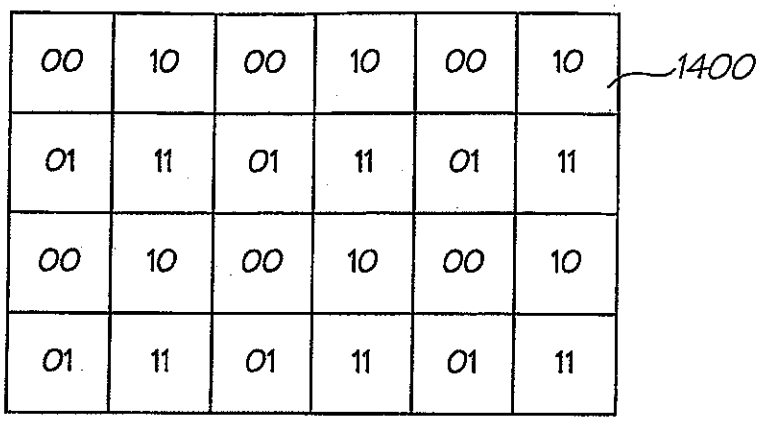
00
10
00
10
00
10
01
11
01
11
01
11
00
10
00
10
00
10
01
11
01
11
01
11
1400

FIG. 87

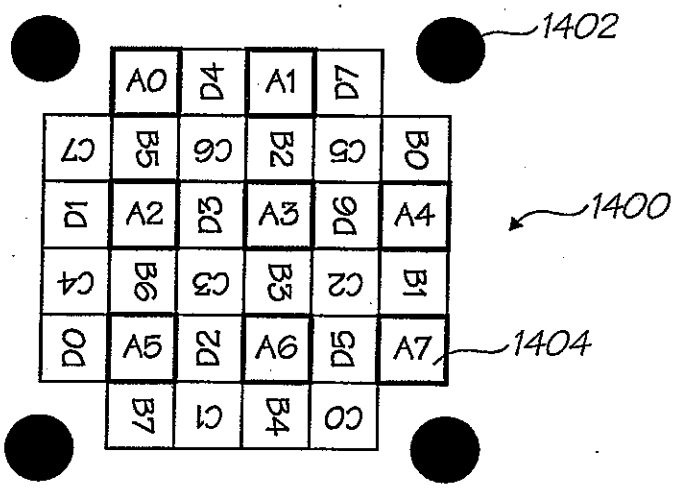
A0
D4
A1
D7
C7
B5
C6
B2
C5
B0
D1
A2
D3
A3
D6
A4
C4
B6
C3
B3
C2
B1
D0
A5
D2
A6
D5
A7
B7
C1
B4
C0
1402
1400
1404

FIG. 88

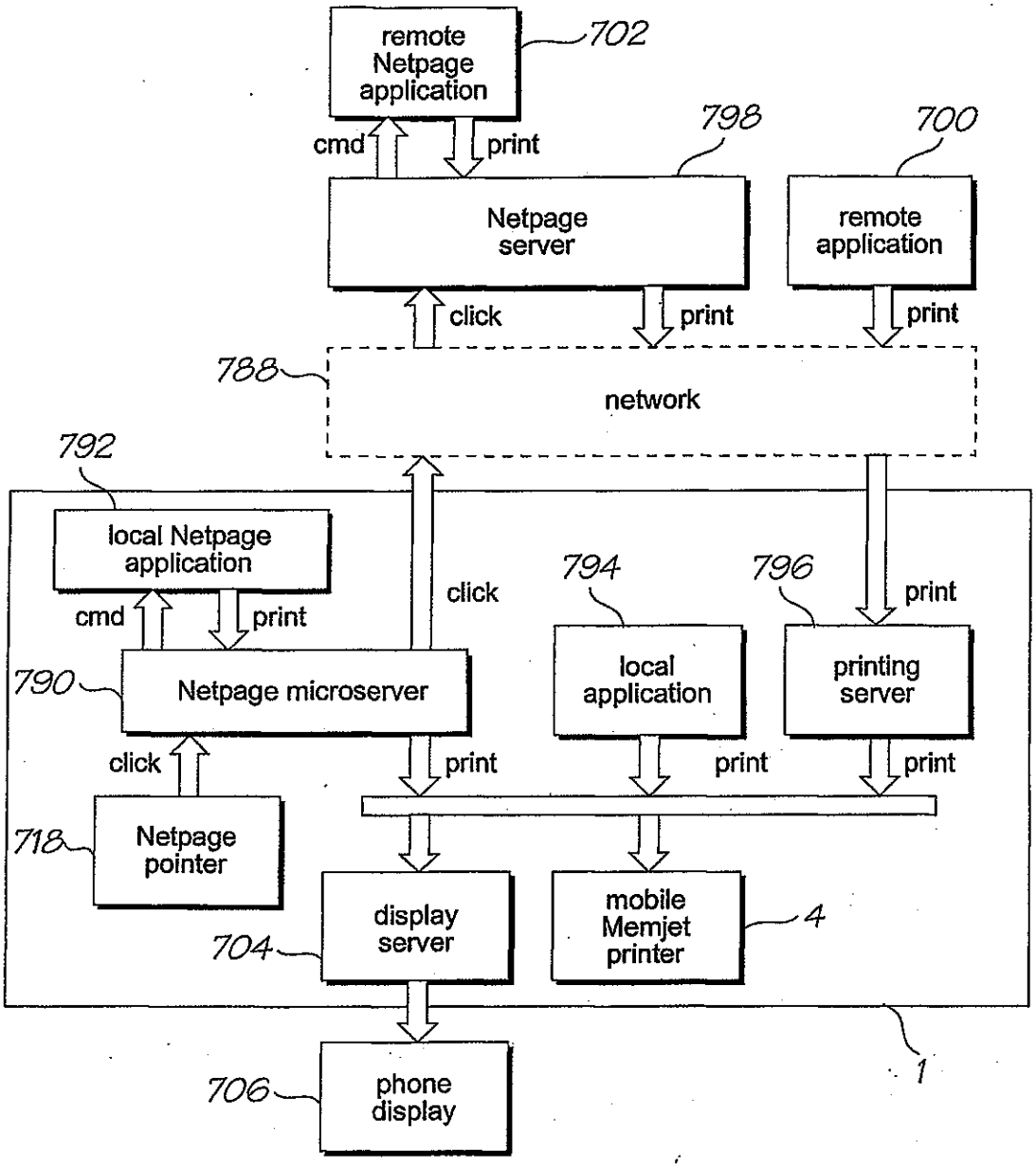
remote Netpage application
702
cmd
print
798
700
Netpage server
remote application
click
print
print
788
network
792
local Netpage application
cmd
print
click
794
796
print
790
Netpage microserver
local application
printing server
click
print
print
print
718
Netpage pointer
display server
mobile Memjet printer
4
704
1
706
phone display

FIG. 89

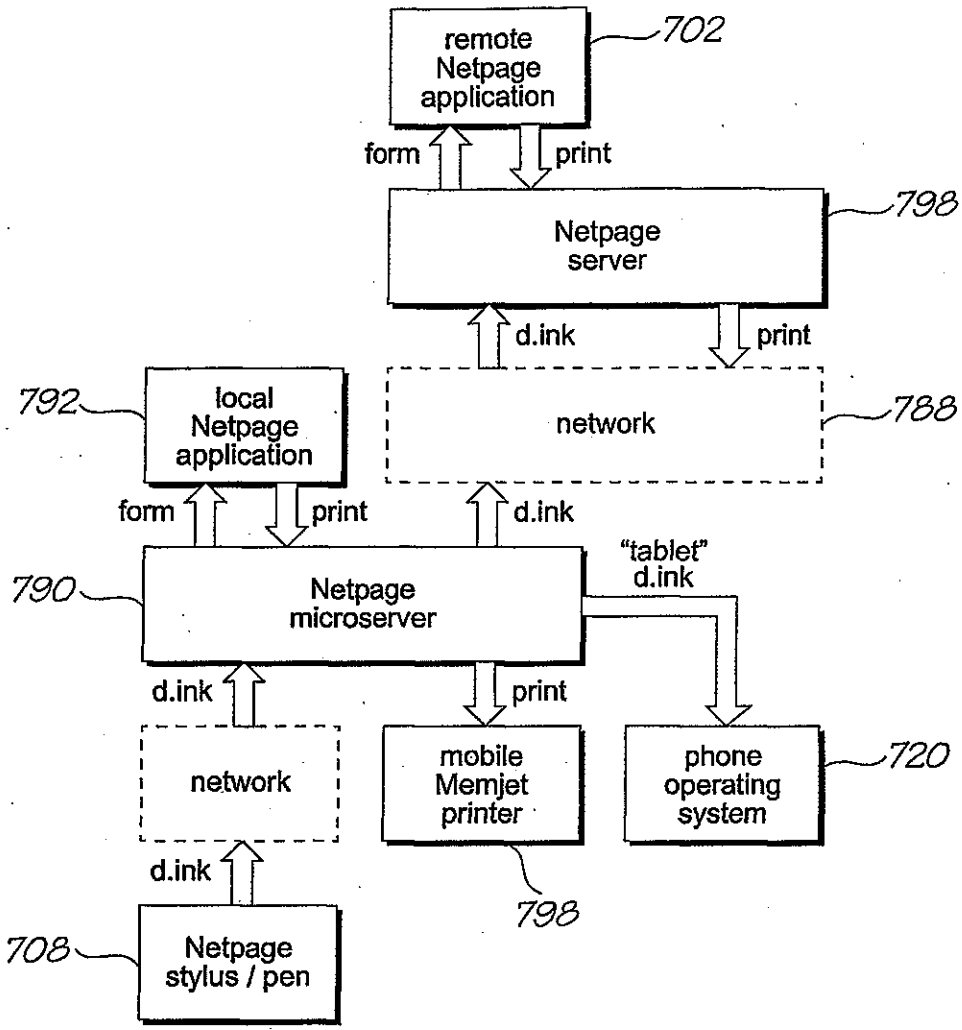
remote Netpage application
702
form
print
Netpage server
798
d.ink
print
792
local Netpage application
network
788
form
print
d.ink
"tablet" d.ink
790
Netpage microserver
d.ink
print
network
mobile Memjet printer
phone operating system
720
d.ink
798
708
Netpage stylus / pen

FIG. 90

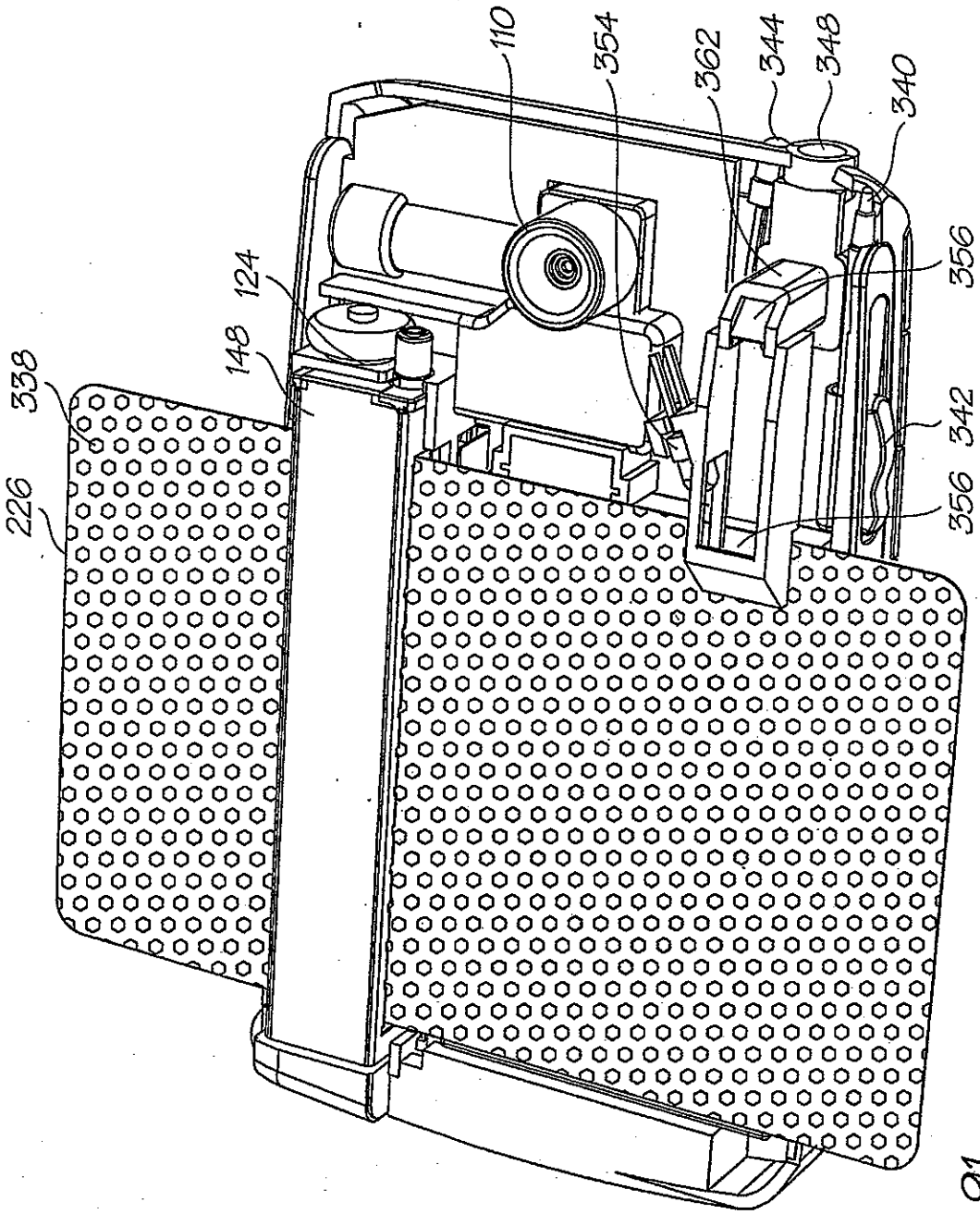

FIG. 91

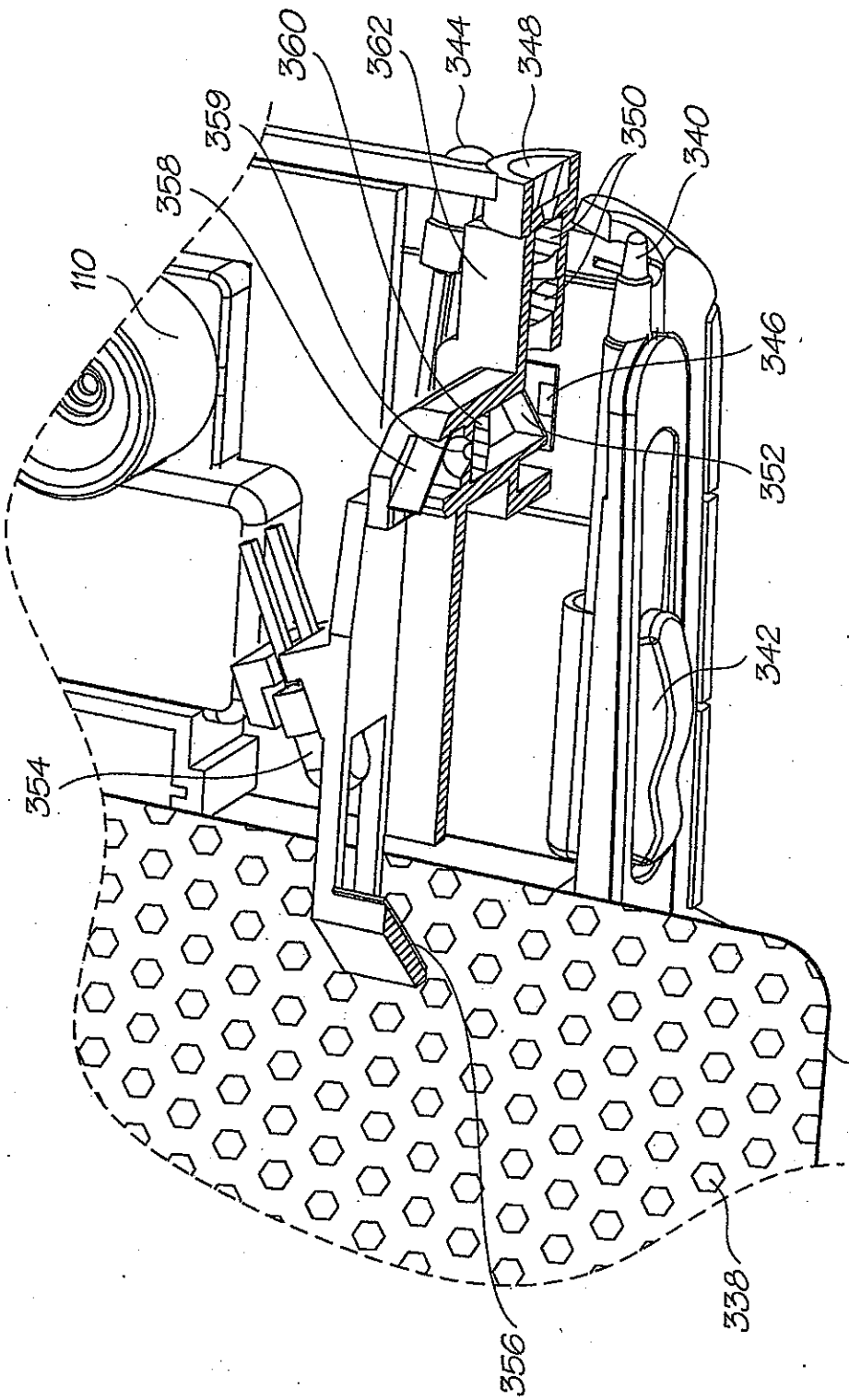

FIG. 92

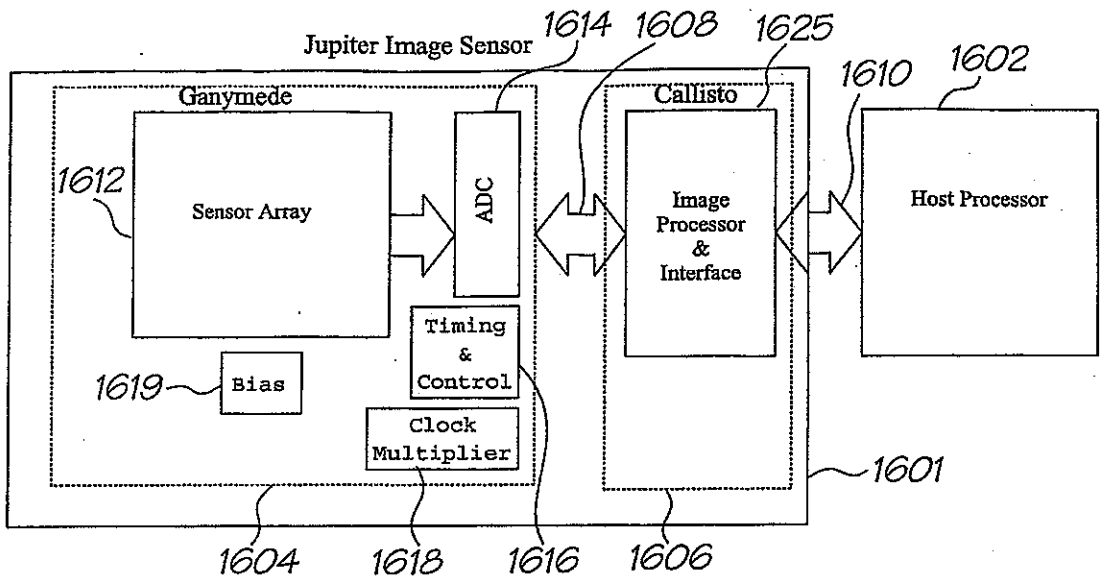
Jupiter Image Sensor
1614
1608
1625
1610
1602
Ganymede
Callisto
1612
Sensor Array
ADC
Image Processor & Interface
Host Processor
Timing & Control
1619
Bias
Clock Multiplier
1601
1604
1618
1616
1606

FIG. 93

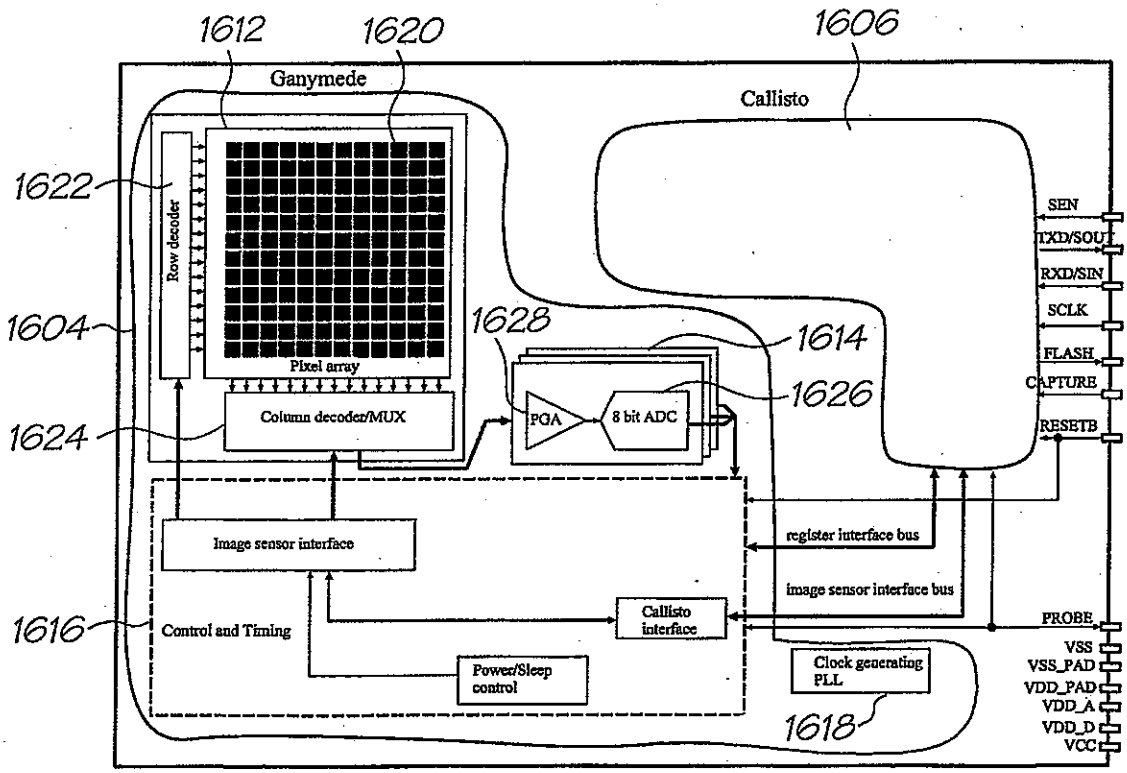
1612
1620
1606
Ganymede
Callisto
1622
Row decoder
Pixel array
1604
1628
1614
1626
1624
Column decoder/MUX
PGA
8 bit ADC
SEN
TXD/SOUT
RXD/SIN
SCLK
FLASH
CAPTURE
RESETB
Image sensor interface
register interface bus
image sensor interface bus
1616
Control and Timing
Callisto interface
PROBE
VSS
VSS_PAD
VDD_PAD
VDD_A
VDD_D
VCC
Power/Sleep control
Clock generating PLL
1618

FIG. 94