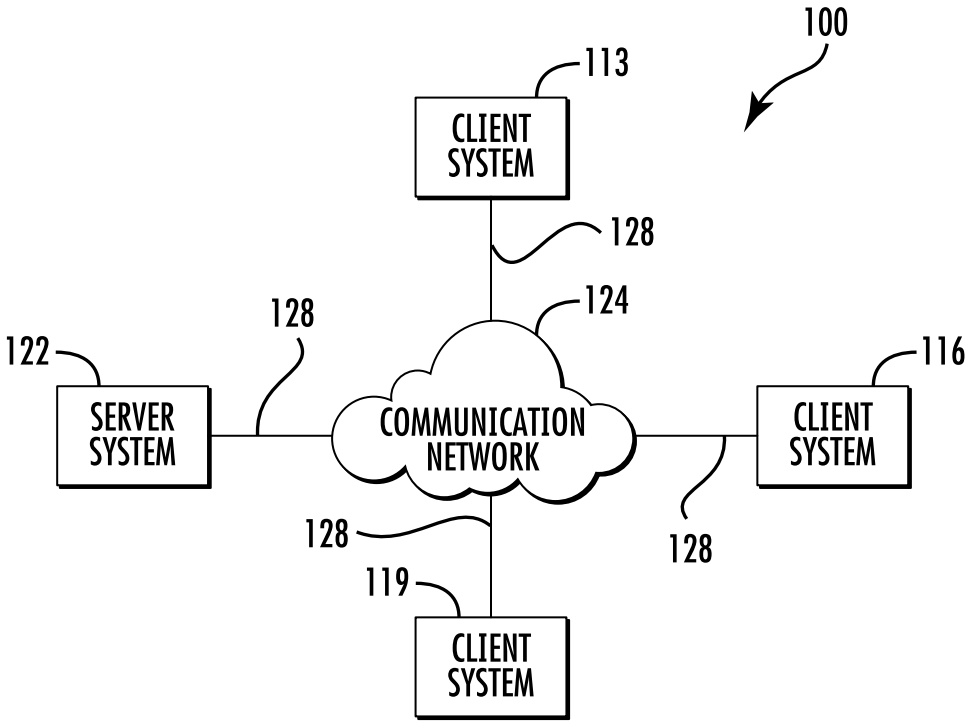
100
113
CLIENT SYSTEM
128
124
128
122
116
SERVER SYSTEM
COMMUNICATION NETWORK
CLIENT SYSTEM
128
128
119
CLIENT SYSTEM

FIG. 1

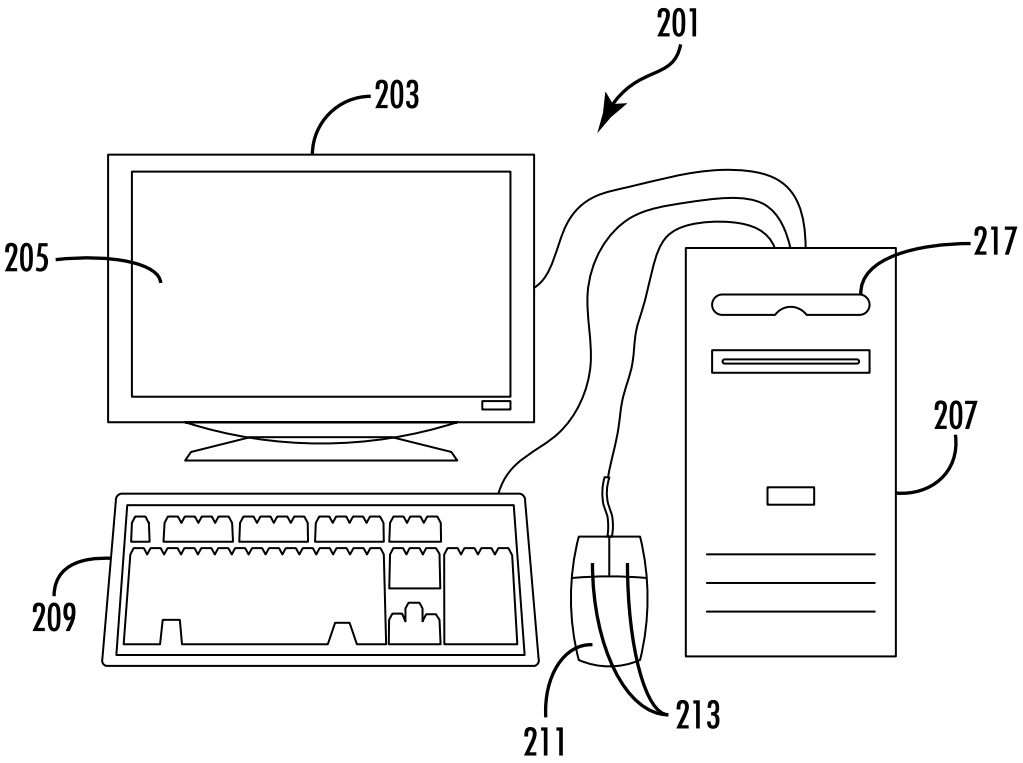
201
203
205
217
207
209
211
213

FIG. 2

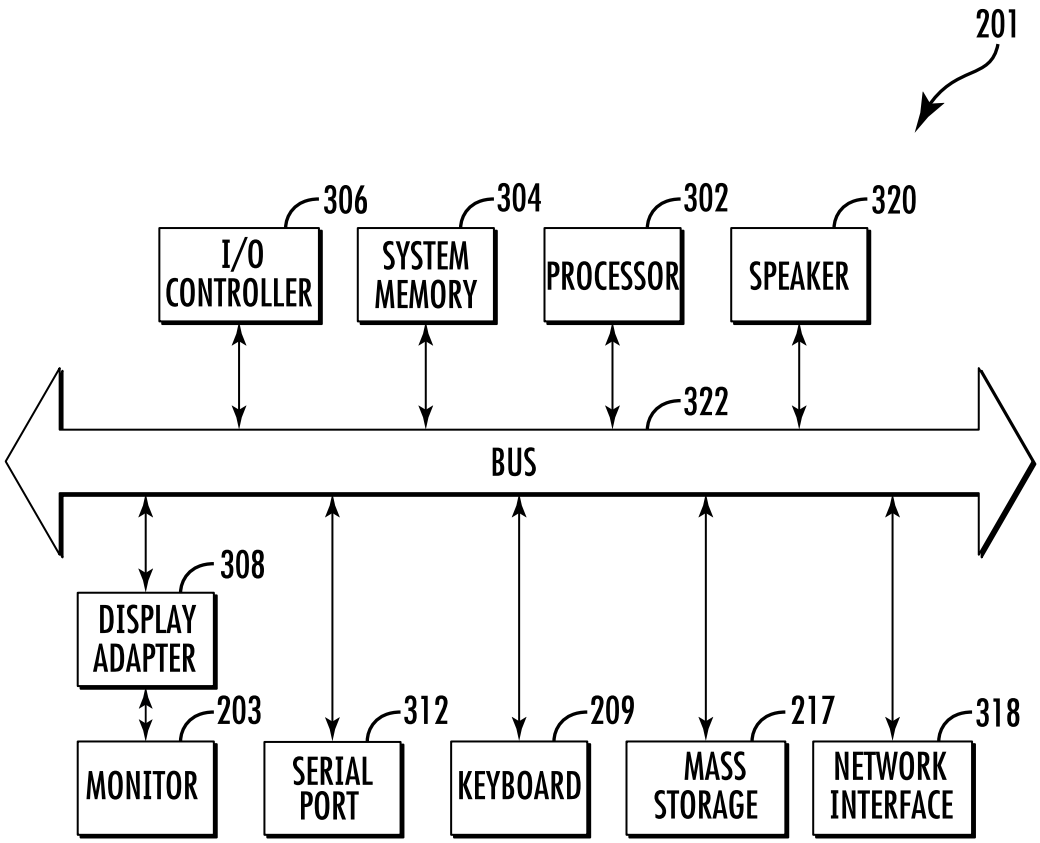
201
306
304
302
320
I/O CONTROLLER
SYSTEM MEMORY
PROCESSOR
SPEAKER
322
BUS
308
DISPLAY ADAPTER
203
312
209
217
318
MONITOR
SERIAL PORT
KEYBOARD
MASS STORAGE
NETWORK INTERFACE

FIG. 3

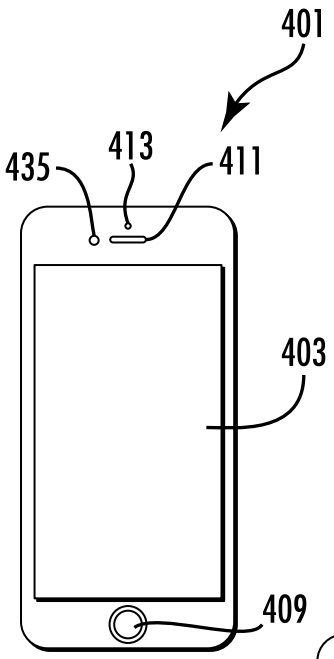

FIG. 4

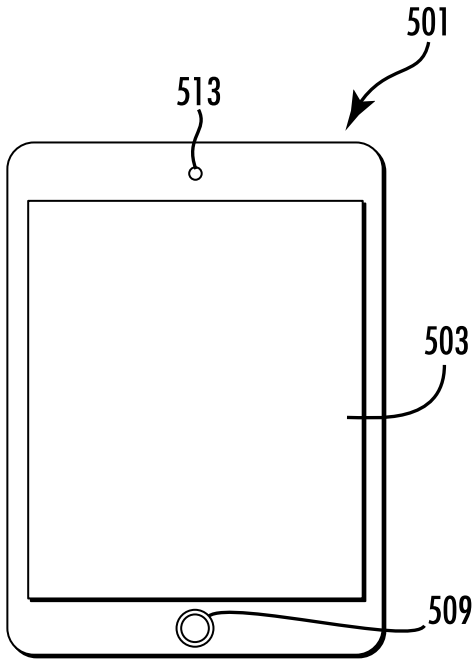

FIG. 5

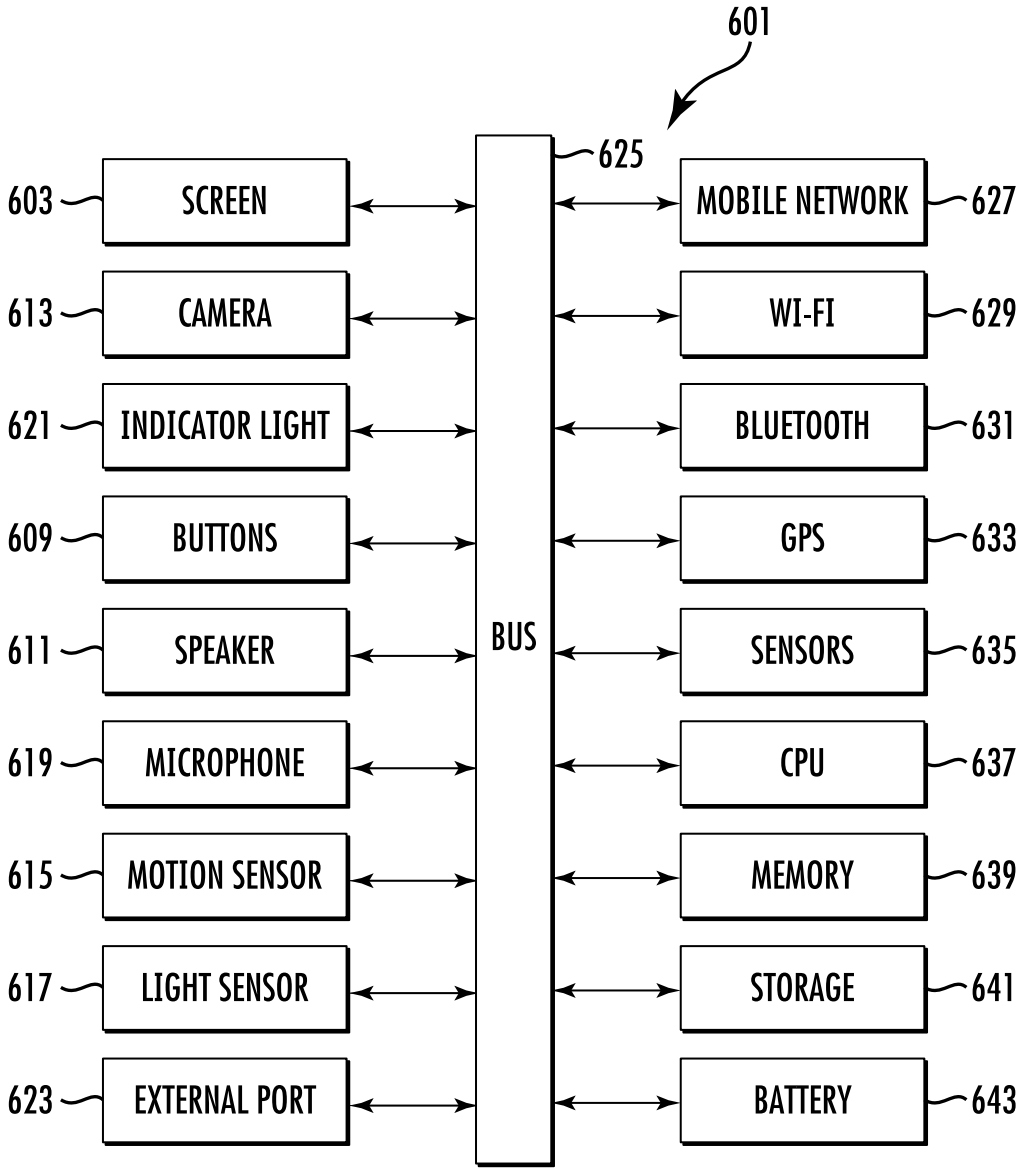

FIG. 6

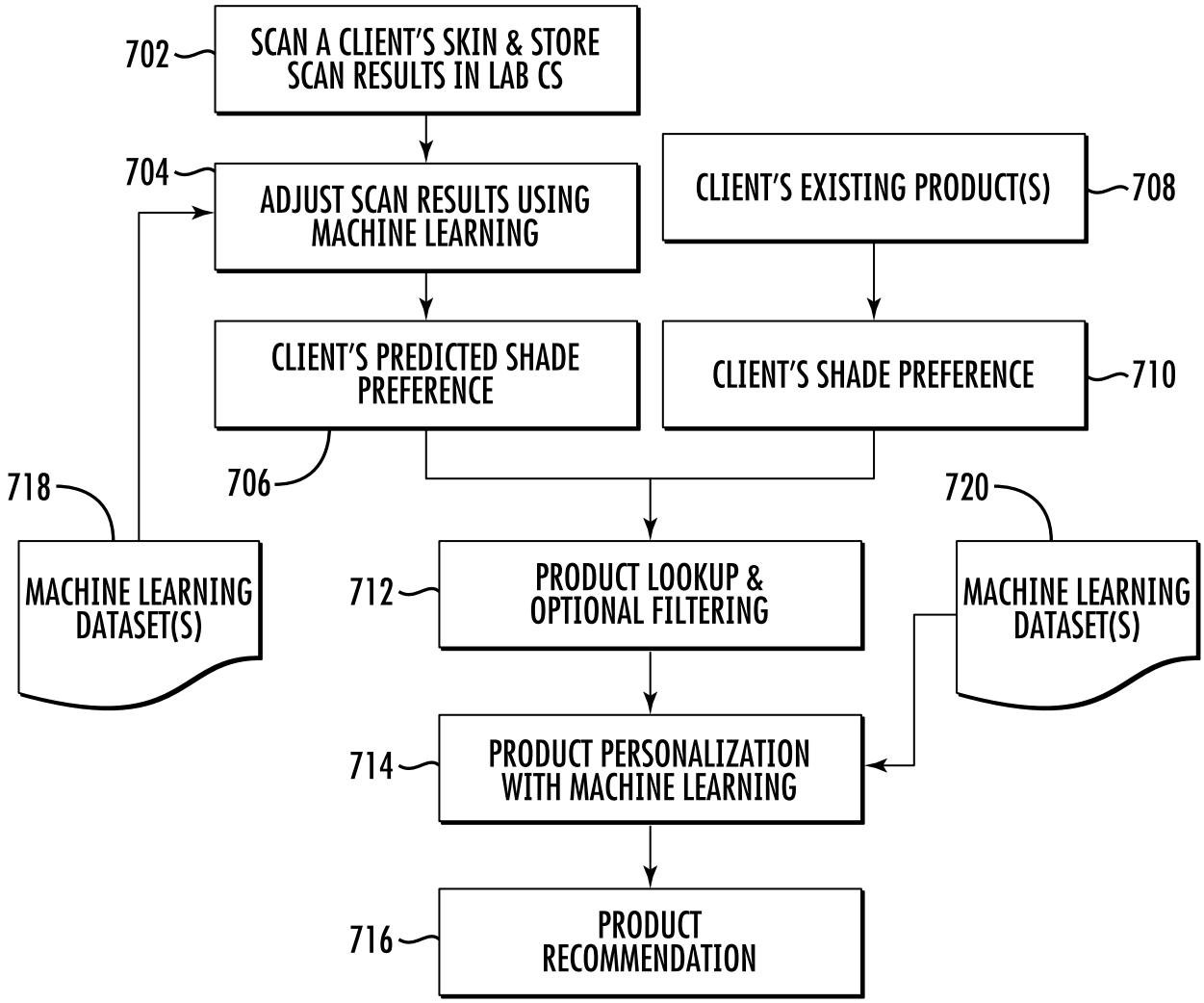
702
SCAN A CLIENT'S SKIN & STORE SCAN RESULTS IN LAB CS
704
ADJUST SCAN RESULTS USING MACHINE LEARNING
CLIENT'S EXISTING PRODUCT(S)
708
CLIENT'S PREDICTED SHADE PREFERENCE
CLIENT'S SHADE PREFERENCE
710
706
718
720
MACHINE LEARNING DATASET(S)
712
PRODUCT LOOKUP & OPTIONAL FILTERING
MACHINE LEARNING DATASET(S)
714
PRODUCT PERSONALIZATION WITH MACHINE LEARNING
716
PRODUCT RECOMMENDATION

FIG. 7

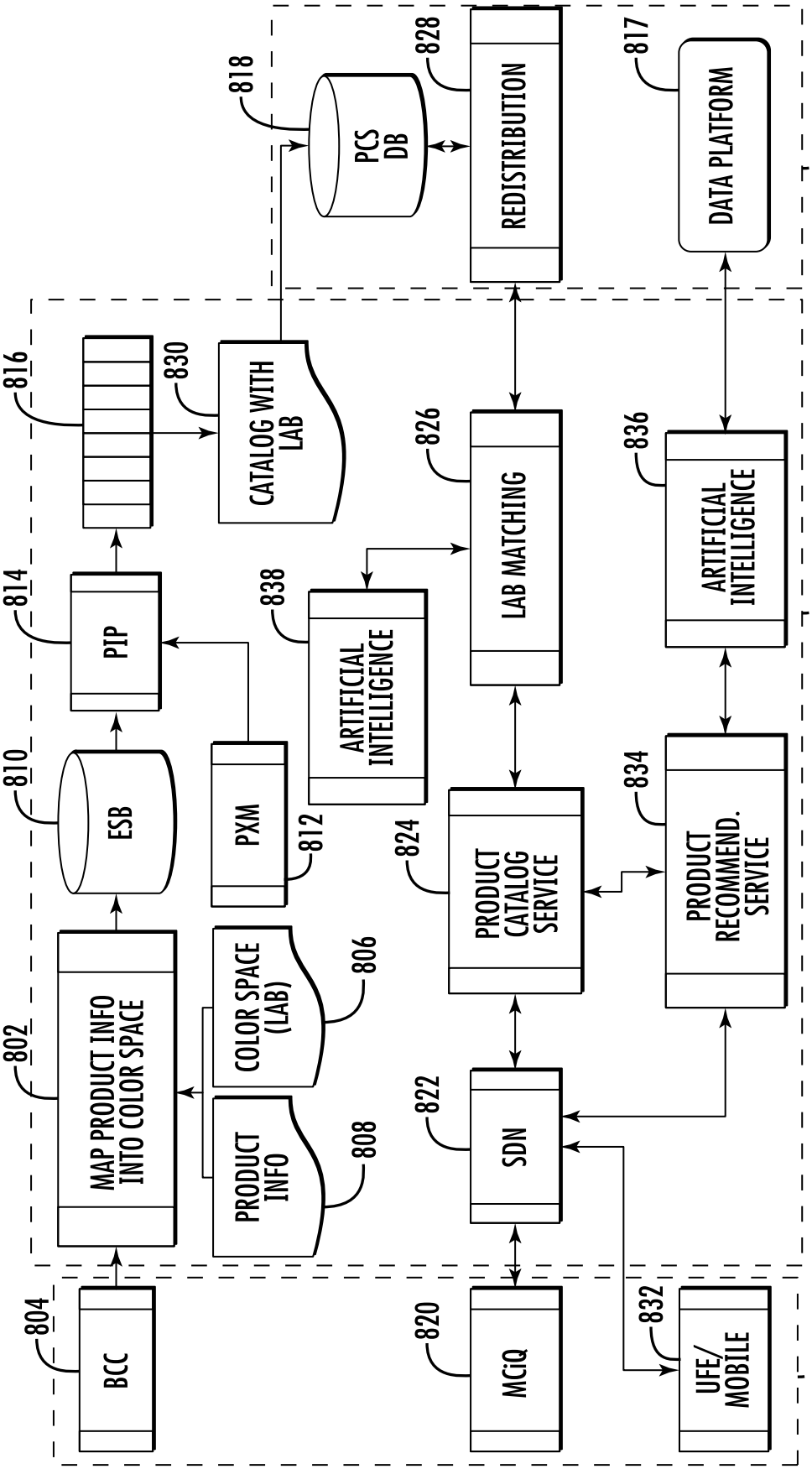
800A
800B
800C
804
BCC
802
MAP PRODUCT INFO INTO COLOR SPACE
808
PRODUCT INFO
806
COLOR SPACE (LAB)
810
ESB
812
PXM
814
PIP
816
838
ARTIFICIAL INTELLIGENCE
830
CATALOG WITH LAB
818
PCS DB
828
REDISTRIBUTION
826
LAB MATCHING
824
PRODUCT CATALOG SERVICE
822
SDN
820
MCiQ
834
PRODUCT RECOMMEND. SERVICE
836
ARTIFICIAL INTELLIGENCE
817
DATA PLATFORM
832
UFE/ MOBILE

FIG. 8A

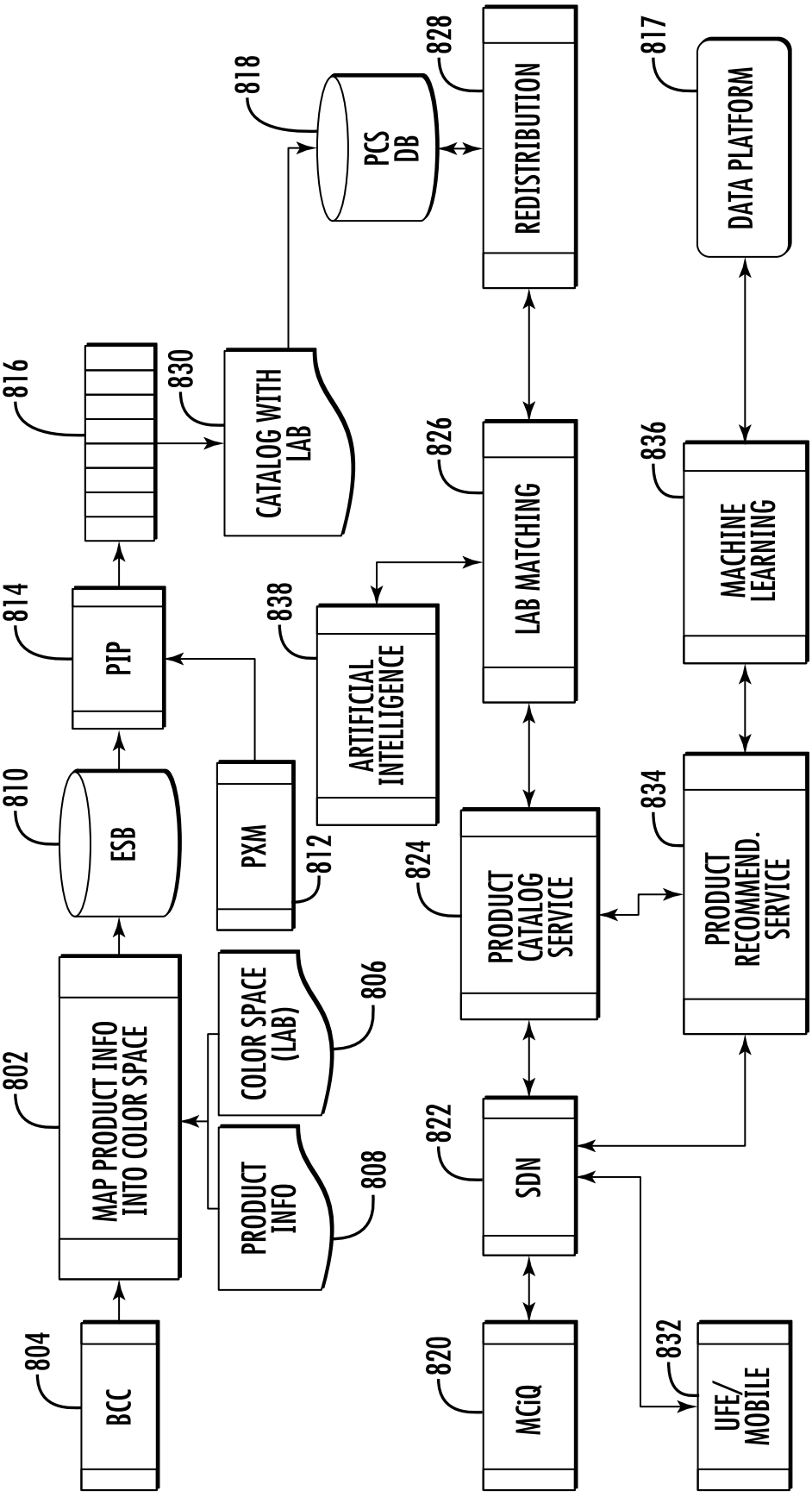
804
BCC
802
MAP PRODUCT INFO INTO COLOR SPACE
808
PRODUCT INFO
806
COLOR SPACE (LAB)
810
ESB
812
PXM
814
PIP
816
830
CATALOG WITH LAB
818
PCS DB
828
REDISTRIBUTION
817
DATA PLATFORM
838
ARTIFICIAL INTELLIGENCE
826
LAB MATCHING
836
MACHINE LEARNING
824
PRODUCT CATALOG SERVICE
834
PRODUCT RECOMMEND. SERVICE
822
SDN
820
MGIQ
832
UFE/ MOBILE

FIG. 8B

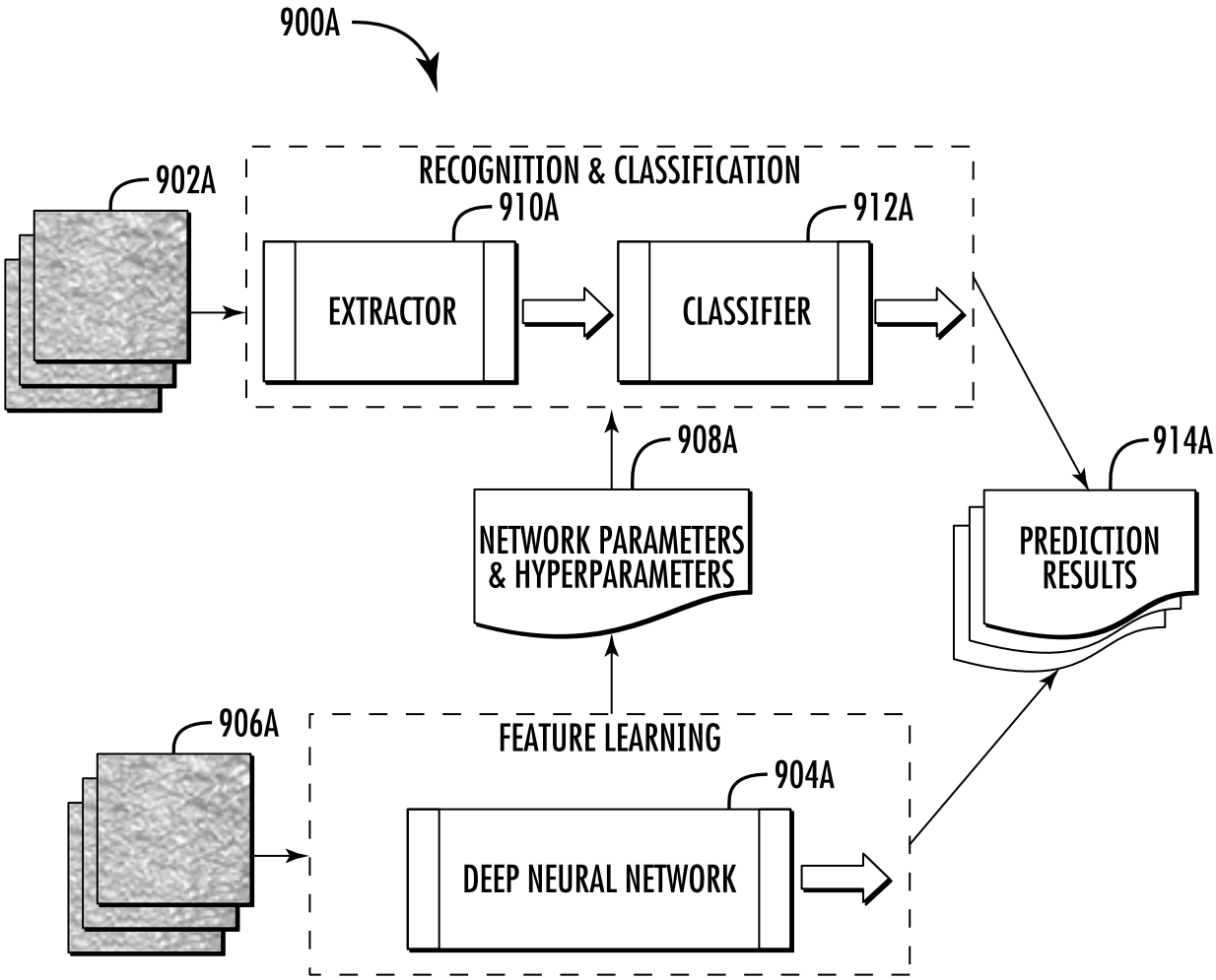
900A
902A
RECOGNITION & CLASSIFICATION
910A
912A
EXTRACTOR
CLASSIFIER
908A
914A
NETWORK PARAMETERS & HYPERPARAMETERS
PREDICTION RESULTS
906A
FEATURE LEARNING
904A
DEEP NEURAL NETWORK

FIG. 9A

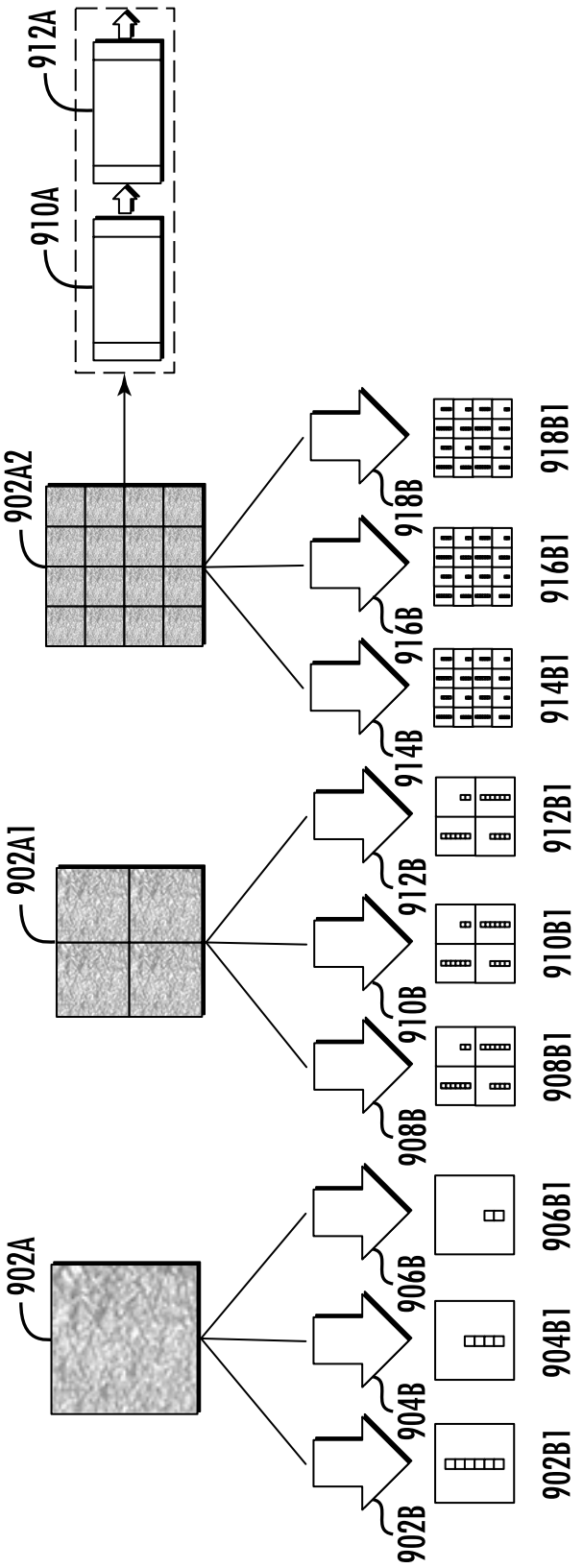
912A
910A
902A2
902A1
902A
902B
904B
906B
908B
910B
912B
914B
916B
918B
902B1
904B1
906B1
908B1
910B1
912B1
914B1
916B1
918B1

FIG. 9B

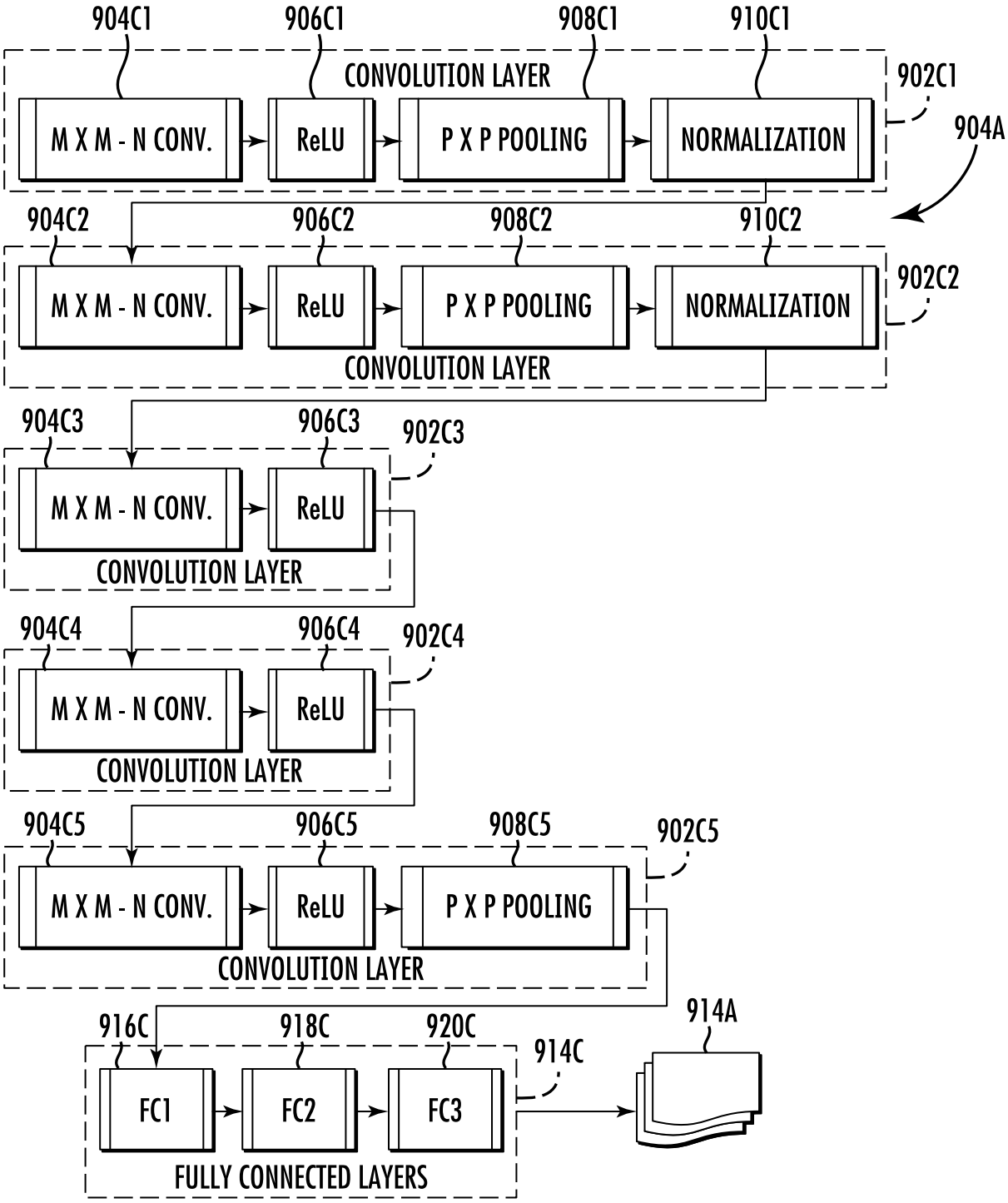
904C1
906C1
908C1
910C1
CONVOLUTION LAYER
902C1
M X M - N CONV.
ReLU
P X P POOLING
NORMALIZATION
904A
904C2
906C2
908C2
910C2
902C2
M X M - N CONV.
ReLU
P X P POOLING
NORMALIZATION
CONVOLUTION LAYER
904C3
906C3
902C3
M X M - N CONV.
ReLU
CONVOLUTION LAYER
904C4
906C4
902C4
M X M - N CONV.
ReLU
CONVOLUTION LAYER
904C5
906C5
908C5
902C5
M X M - N CONV.
ReLU
P X P POOLING
CONVOLUTION LAYER
916C
918C
920C
914C
914A
FC1
FC2
FC3
FULLY CONNECTED LAYERS

FIG. 9C

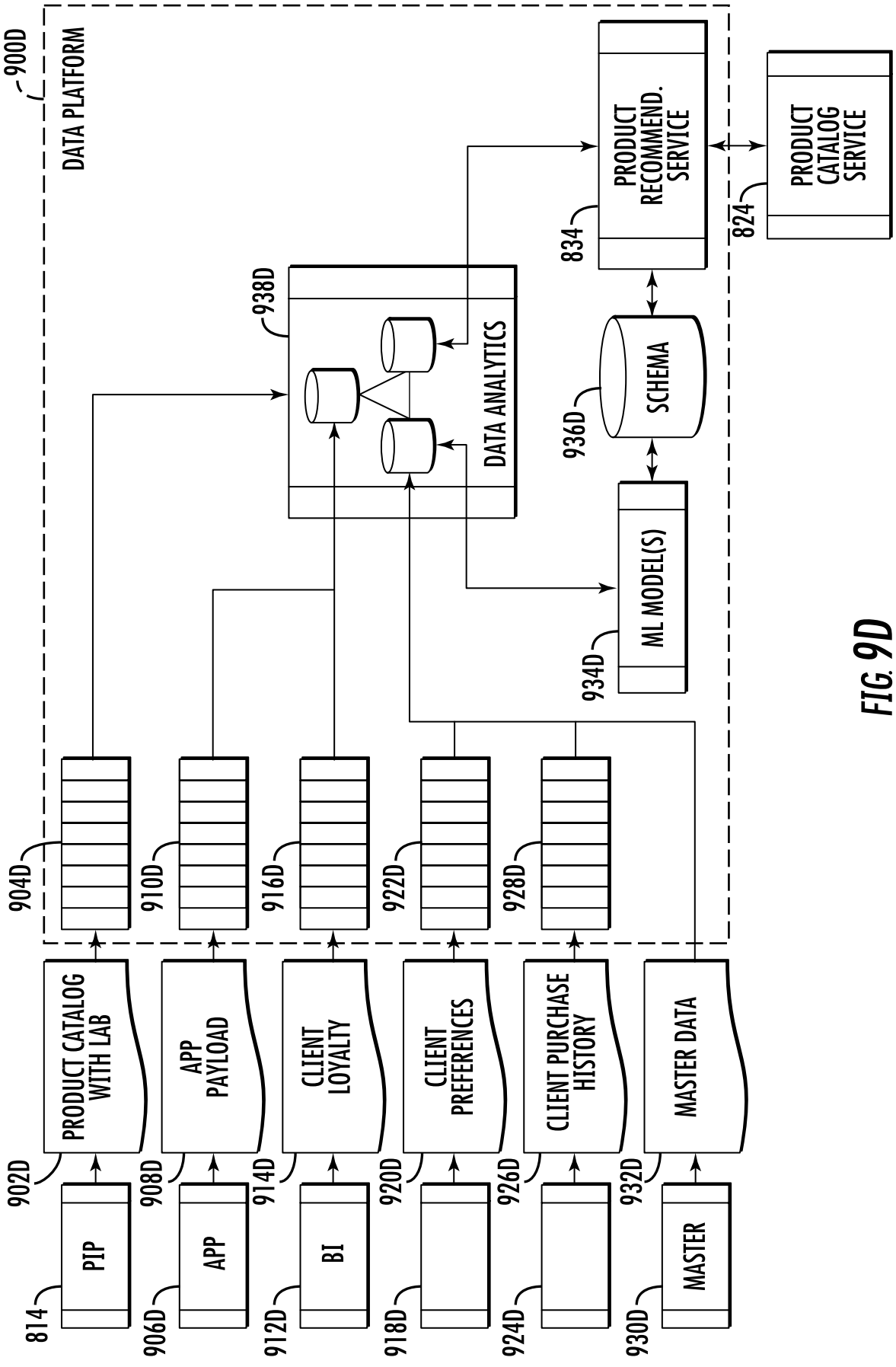
900D
DATA PLATFORM
PRODUCT RECOMMEND. SERVICE
834
PRODUCT CATALOG SERVICE
824
938D
DATA ANALYTICS
936D
SCHEMA
934D
ML MODEL(S)
904D
910D
916D
922D
928D
902D
PRODUCT CATALOG WITH LAB
908D
APP PAYLOAD
914D
CLIENT LOYALTY
920D
CLIENT PREFERENCES
926D
CLIENT PURCHASE HISTORY
932D
MASTER DATA
814
PIP
906D
APP
912D
BI
918D
924D
930D
MASTER

FIG. 9D

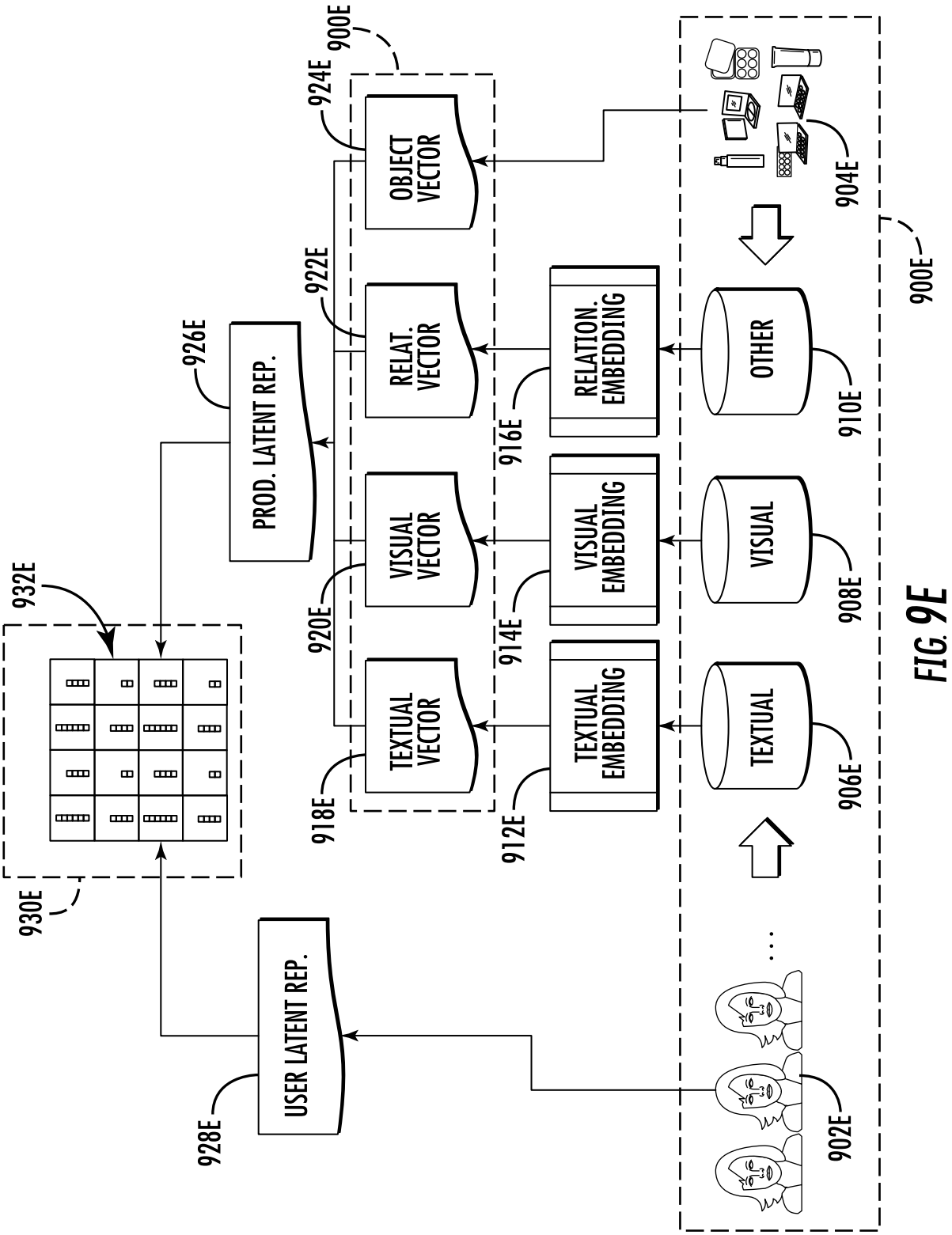
900E
924E
OBJECT VECTOR
922E
RELAT. VECTOR
920E
VISUAL VECTOR
918E
TEXTUAL VECTOR
926E
PROD. LATENT REP.
932E
930E
928E
USER LATENT REP.
916E
RELATION. EMBEDDING
914E
VISUAL EMBEDDING
912E
TEXTUAL EMBEDDING
904E
OTHER
910E
VISUAL
908E
TEXTUAL
906E
902E
900E

FIG. 9E

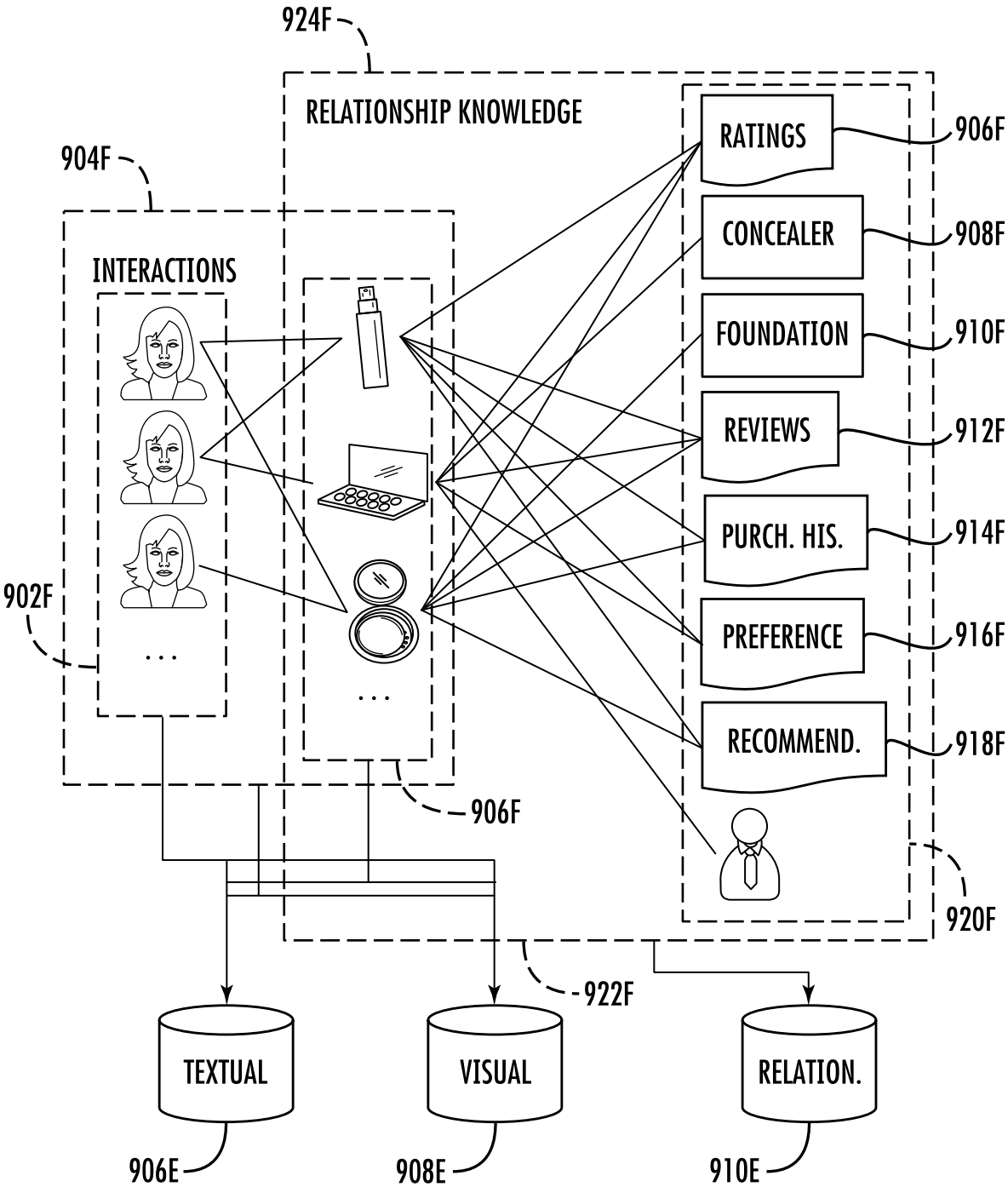
924F
RELATIONSHIP KNOWLEDGE
904F
INTERACTIONS
902F
RATINGS
906F
CONCEALER
908F
FOUNDATION
910F
REVIEWS
912F
PURCH. HIS.
914F
PREFERENCE
916F
RECOMMEND.
918F
906F
920F
922F
TEXTUAL
VISUAL
RELATION.
906E
908E
910E

FIG. 9F

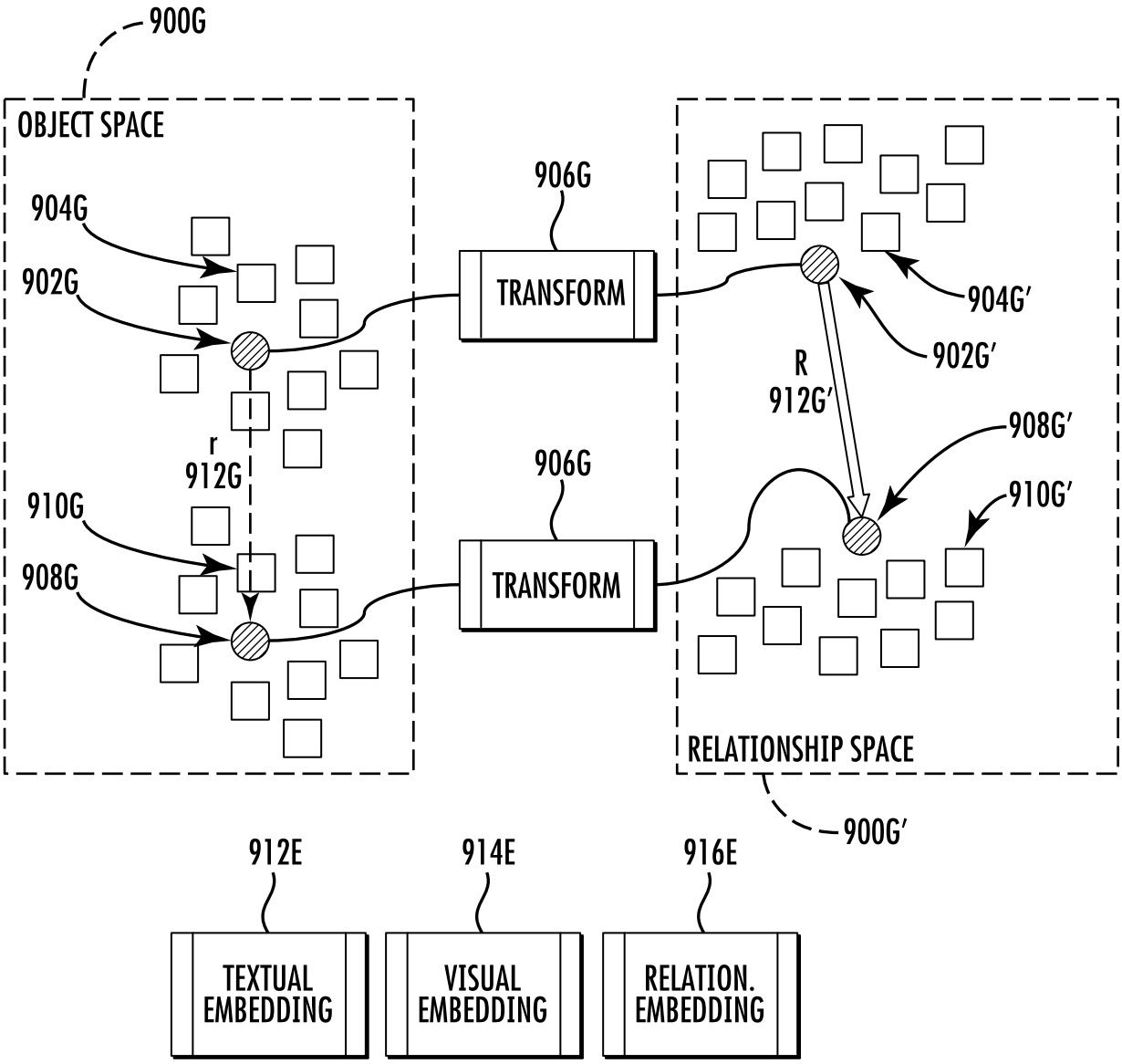
900G
OBJECT SPACE
904G
902G
r
912G
910G
908G
906G
TRANSFORM
906G
TRANSFORM
904G′
902G′
R
912G′
908G′
910G′
RELATIONSHIP SPACE
900G′
912E
914E
916E
TEXTUAL EMBEDDING
VISUAL EMBEDDING
RELATION. EMBEDDING

FIG. 9G

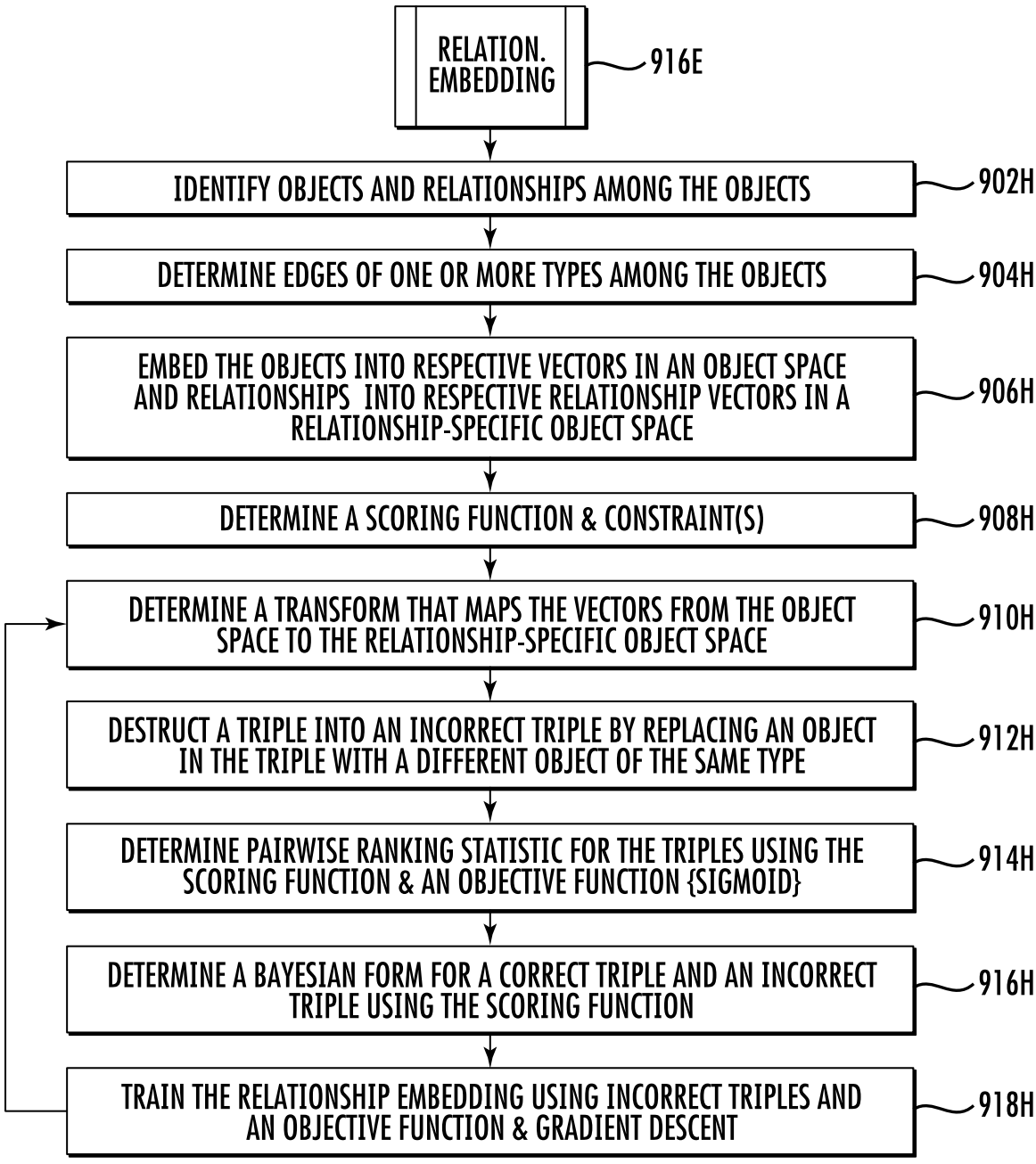
RELATION. EMBEDDING
916E
IDENTIFY OBJECTS AND RELATIONSHIPS AMONG THE OBJECTS
902H
DETERMINE EDGES OF ONE OR MORE TYPES AMONG THE OBJECTS
904H
EMBED THE OBJECTS INTO RESPECTIVE VECTORS IN AN OBJECT SPACE AND RELATIONSHIPS INTO RESPECTIVE RELATIONSHIP VECTORS IN A RELATIONSHIP-SPECIFIC OBJECT SPACE
906H
DETERMINE A SCORING FUNCTION & CONSTRAINT(S)
908H
DETERMINE A TRANSFORM THAT MAPS THE VECTORS FROM THE OBJECT SPACE TO THE RELATIONSHIP-SPECIFIC OBJECT SPACE
910H
DESTRUCT A TRIPLE INTO AN INCORRECT TRIPLE BY REPLACING AN OBJECT IN THE TRIPLE WITH A DIFFERENT OBJECT OF THE SAME TYPE
912H
DETERMINE PAIRWISE RANKING STATISTIC FOR THE TRIPLES USING THE SCORING FUNCTION & AN OBJECTIVE FUNCTION {SIGMOID}
914H
DETERMINE A BAYESIAN FORM FOR A CORRECT TRIPLE AND AN INCORRECT TRIPLE USING THE SCORING FUNCTION
916H
TRAIN THE RELATIONSHIP EMBEDDING USING INCORRECT TRIPLES AND AN OBJECTIVE FUNCTION & GRADIENT DESCENT
918H

FIG. 9H

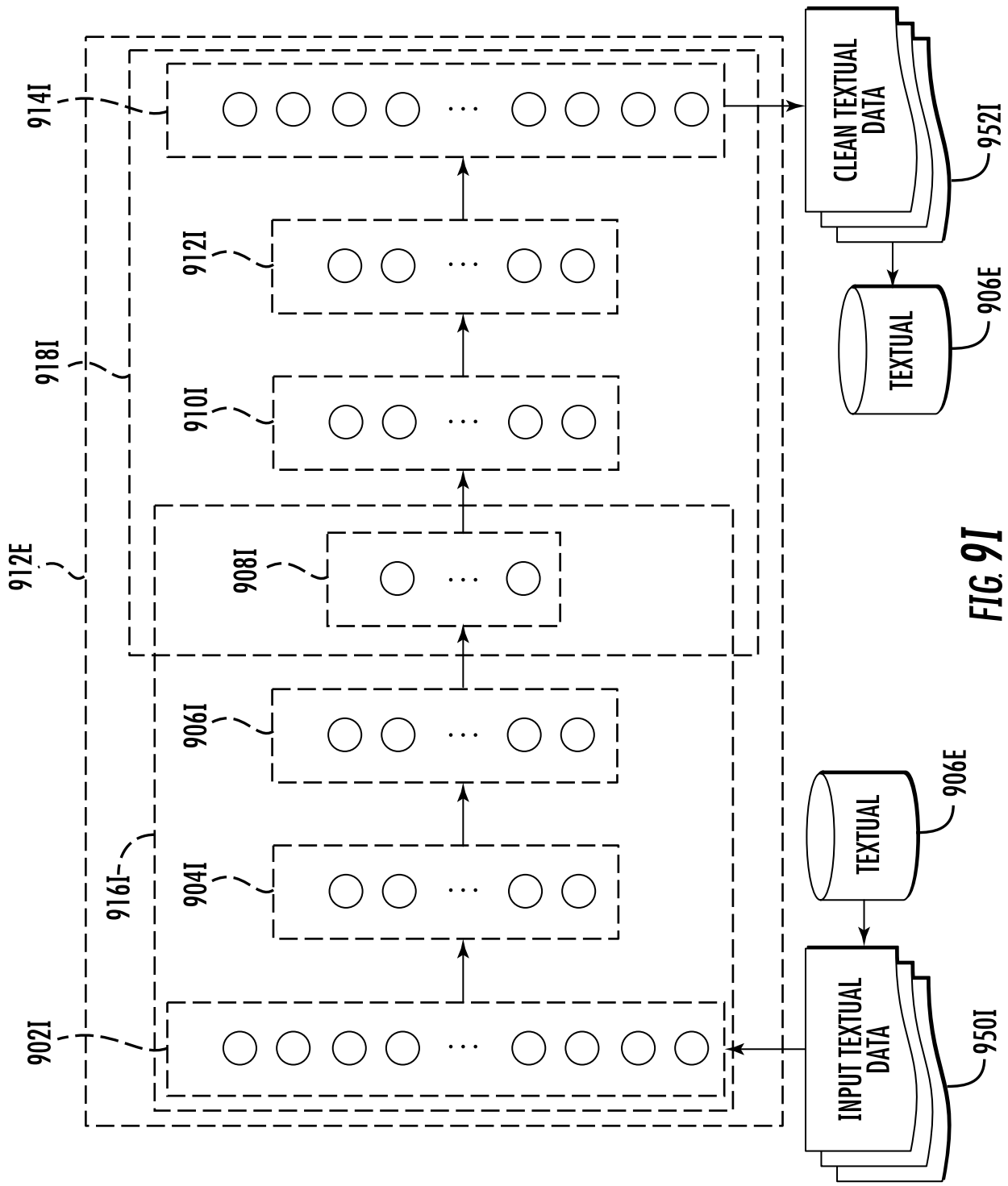
914I
912I
910I
908I
906I
904I
902I
918I
912E
916I
CLEAN TEXTUAL DATA
952I
TEXTUAL
906E
TEXTUAL
906E
INPUT TEXTUAL DATA
950I

FIG. 91

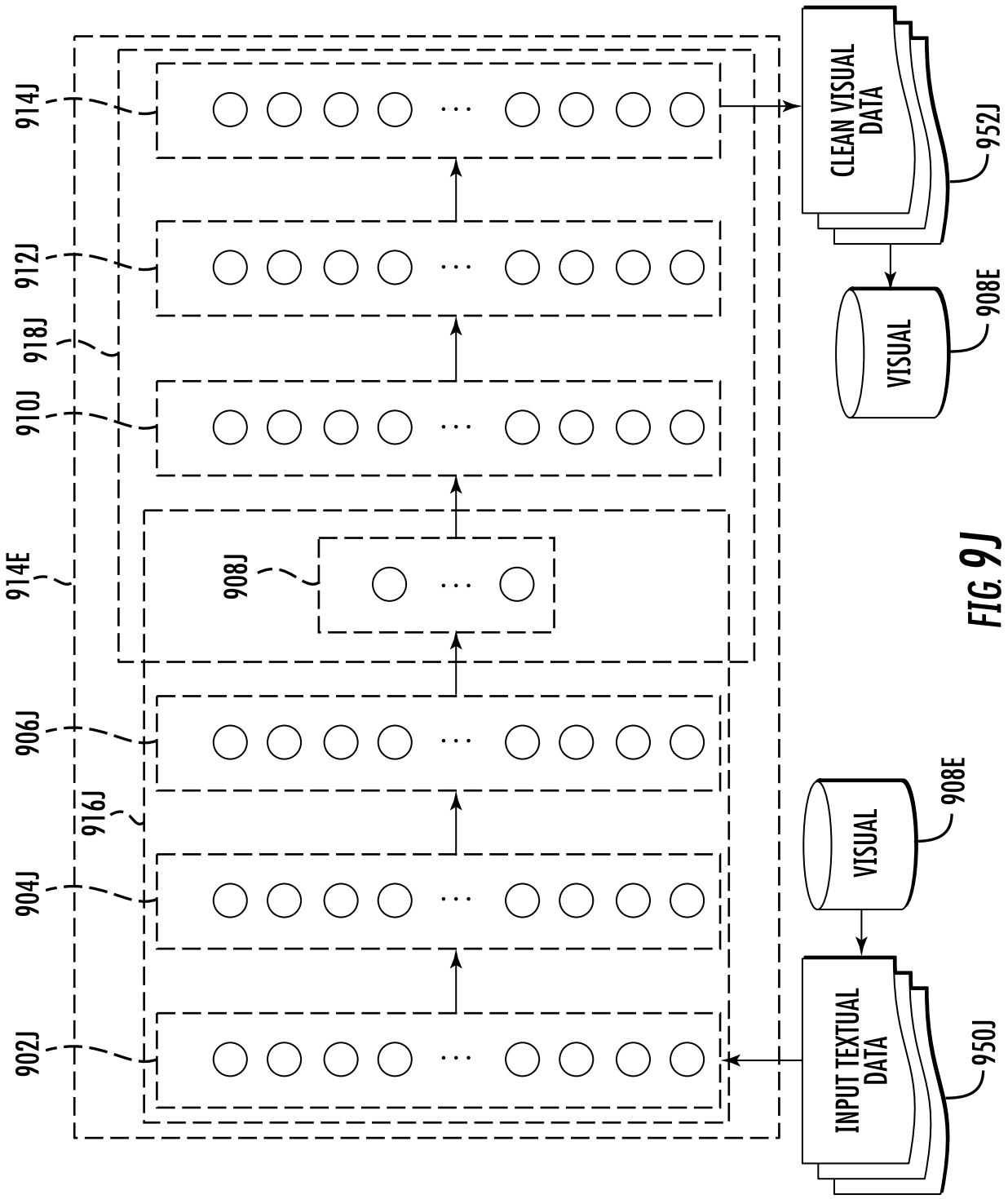
914J
912J
918J
910J
914E
908J
906J
916J
904J
902J
CLEAN VISUAL DATA
952J
VISUAL
908E
VISUAL
908E
INPUT TEXTUAL DATA
950J

FIG. 9J

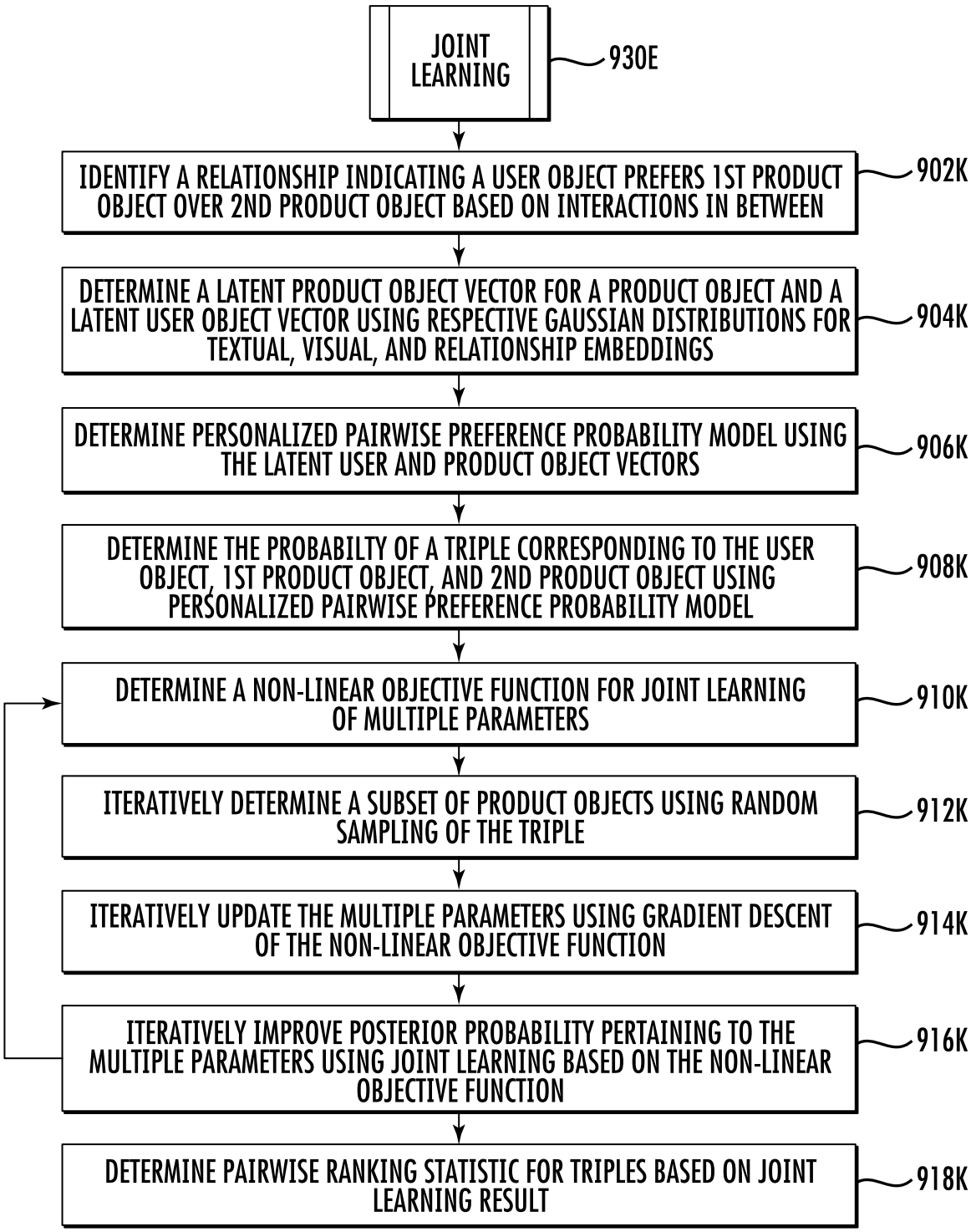
JOINT LEARNING
930E
IDENTIFY A RELATIONSHIP INDICATING A USER OBJECT PREFERS 1ST PRODUCT OBJECT OVER 2ND PRODUCT OBJECT BASED ON INTERACTIONS IN BETWEEN
902K
DETERMINE A LATENT PRODUCT OBJECT VECTOR FOR A PRODUCT OBJECT AND A LATENT USER OBJECT VECTOR USING RESPECTIVE GAUSSIAN DISTRIBUTIONS FOR TEXTUAL, VISUAL, AND RELATIONSHIP EMBEDDINGS
904K
DETERMINE PERSONALIZED PAIRWISE PREFERENCE PROBABILITY MODEL USING THE LATENT USER AND PRODUCT OBJECT VECTORS
906K
DETERMINE THE PROBABILTY OF A TRIPLE CORRESPONDING TO THE USER OBJECT, 1ST PRODUCT OBJECT, AND 2ND PRODUCT OBJECT USING PERSONALIZED PAIRWISE PREFERENCE PROBABILITY MODEL
908K
DETERMINE A NON-LINEAR OBJECTIVE FUNCTION FOR JOINT LEARNING OF MULTIPLE PARAMETERS
910K
ITERATIVELY DETERMINE A SUBSET OF PRODUCT OBJECTS USING RANDOM SAMPLING OF THE TRIPLE
912K
ITERATIVELY UPDATE THE MULTIPLE PARAMETERS USING GRADIENT DESCENT OF THE NON-LINEAR OBJECTIVE FUNCTION
914K
ITERATIVELY IMPROVE POSTERIOR PROBABILITY PERTAINING TO THE MULTIPLE PARAMETERS USING JOINT LEARNING BASED ON THE NON-LINEAR OBJECTIVE FUNCTION
916K
DETERMINE PAIRWISE RANKING STATISTIC FOR TRIPLES BASED ON JOINT LEARNING RESULT
918K

FIG. 9K

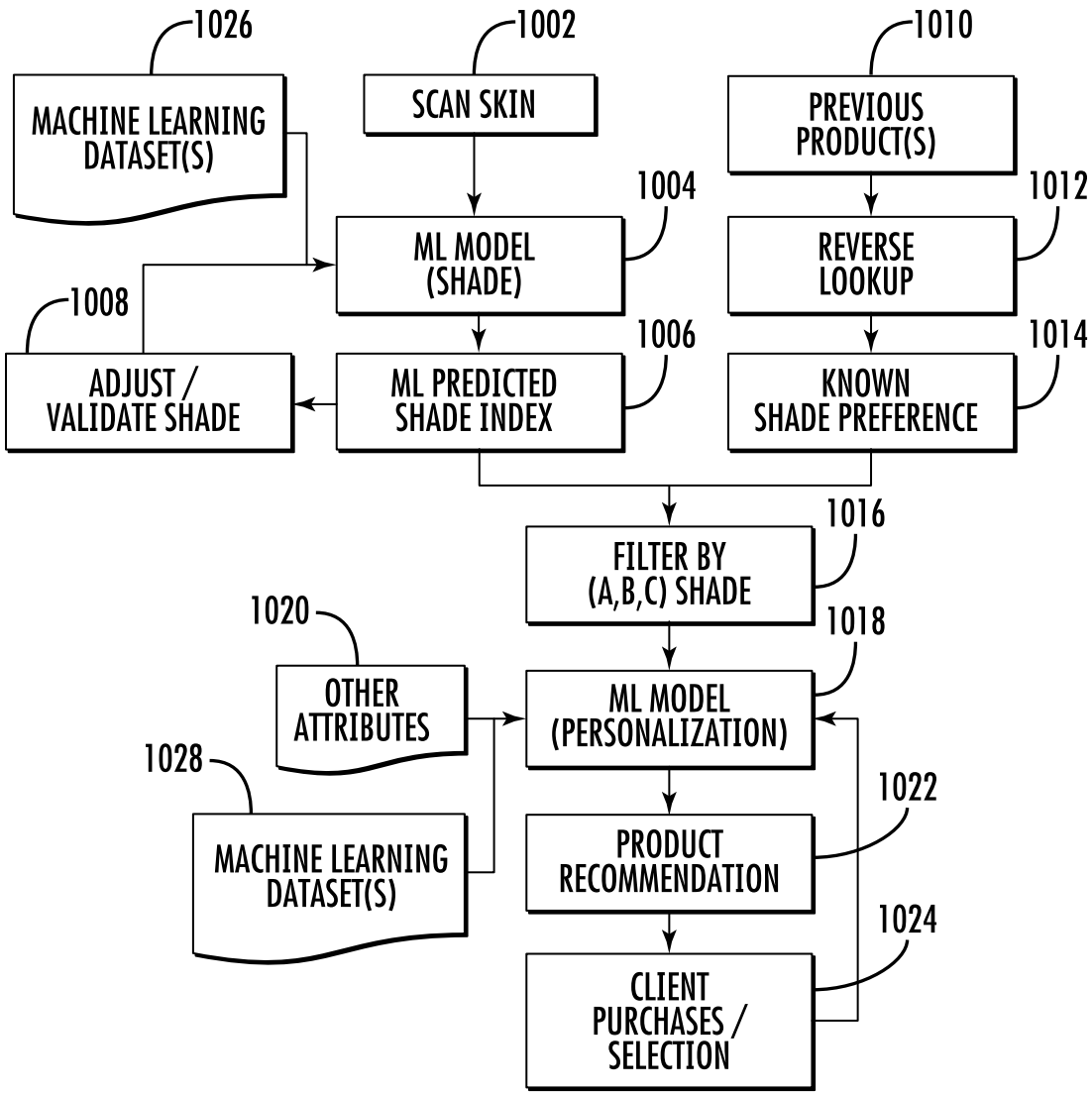
1026
MACHINE LEARNING DATASET(S)
1002
SCAN SKIN
1010
PREVIOUS PRODUCT(S)
1004
ML MODEL (SHADE)
1012
REVERSE LOOKUP
1008
ADJUST / VALIDATE SHADE
1006
ML PREDICTED SHADE INDEX
1014
KNOWN SHADE PREFERENCE
1016
FILTER BY (A,B,C) SHADE
1020
OTHER ATTRIBUTES
1018
ML MODEL (PERSONALIZATION)
1028
MACHINE LEARNING DATASET(S)
1022
PRODUCT RECOMMENDATION
1024
CLIENT PURCHASES / SELECTION

FIG. 10

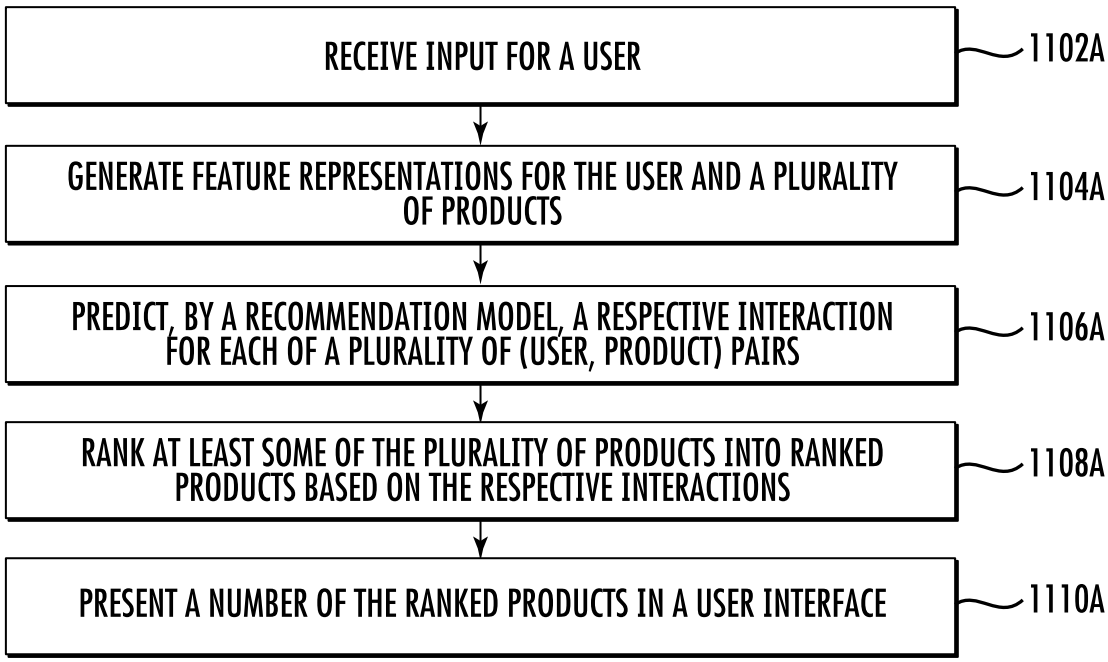
RECEIVE INPUT FOR A USER
1102A
GENERATE FEATURE REPRESENTATIONS FOR THE USER AND A PLURALITY OF PRODUCTS
1104A
PREDICT, BY A RECOMMENDATION MODEL, A RESPECTIVE INTERACTION FOR EACH OF A PLURALITY OF (USER, PRODUCT) PAIRS
1106A
RANK AT LEAST SOME OF THE PLURALITY OF PRODUCTS INTO RANKED PRODUCTS BASED ON THE RESPECTIVE INTERACTIONS
1108A
PRESENT A NUMBER OF THE RANKED PRODUCTS IN A USER INTERFACE
1110A

FIG. 11A

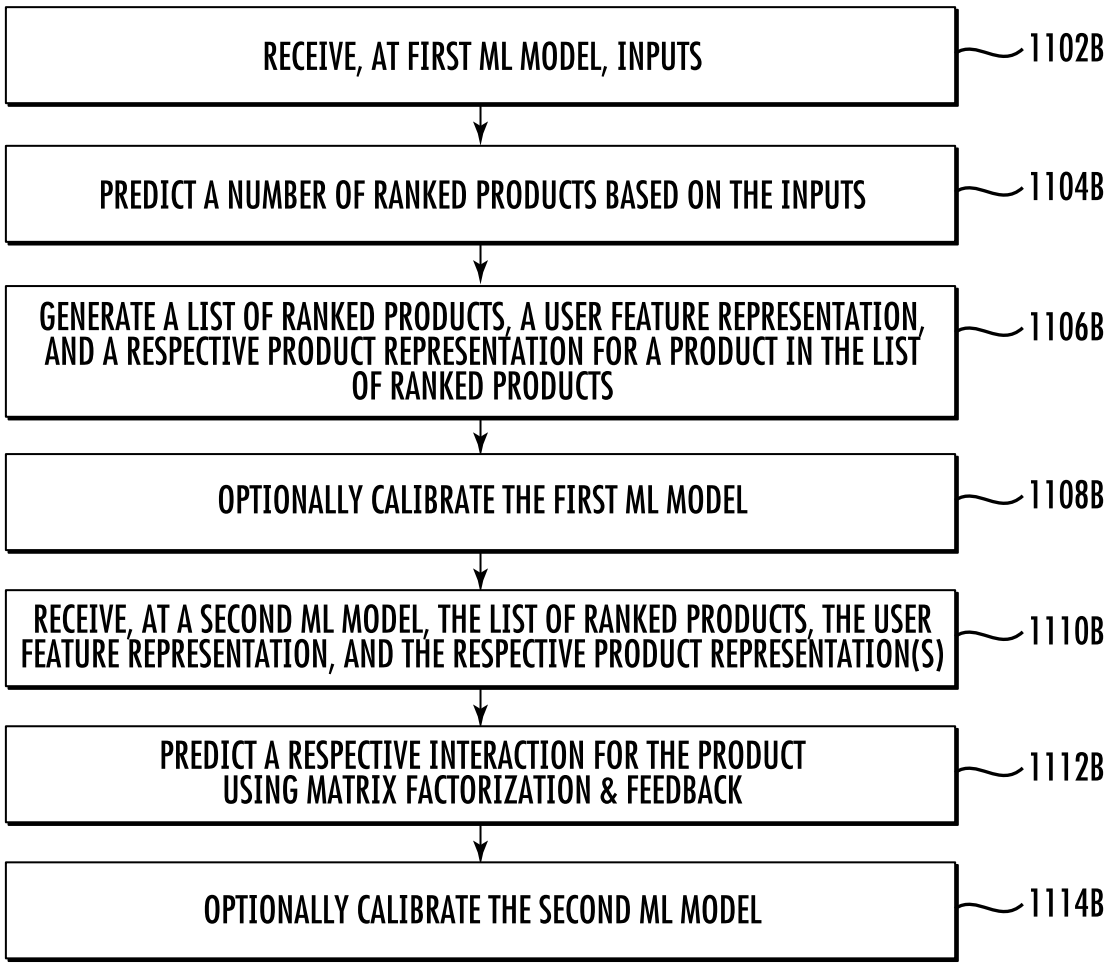
RECEIVE, AT FIRST ML MODEL, INPUTS
1102B
PREDICT A NUMBER OF RANKED PRODUCTS BASED ON THE INPUTS
1104B
GENERATE A LIST OF RANKED PRODUCTS, A USER FEATURE REPRESENTATION, AND A RESPECTIVE PRODUCT REPRESENTATION FOR A PRODUCT IN THE LIST OF RANKED PRODUCTS
1106B
OPTIONALLY CALIBRATE THE FIRST ML MODEL
1108B
RECEIVE, AT A SECOND ML MODEL, THE LIST OF RANKED PRODUCTS, THE USER FEATURE REPRESENTATION, AND THE RESPECTIVE PRODUCT REPRESENTATION(S)
1110B
PREDICT A RESPECTIVE INTERACTION FOR THE PRODUCT USING MATRIX FACTORIZATION & FEEDBACK
1112B
OPTIONALLY CALIBRATE THE SECOND ML MODEL
1114B

FIG. 11B

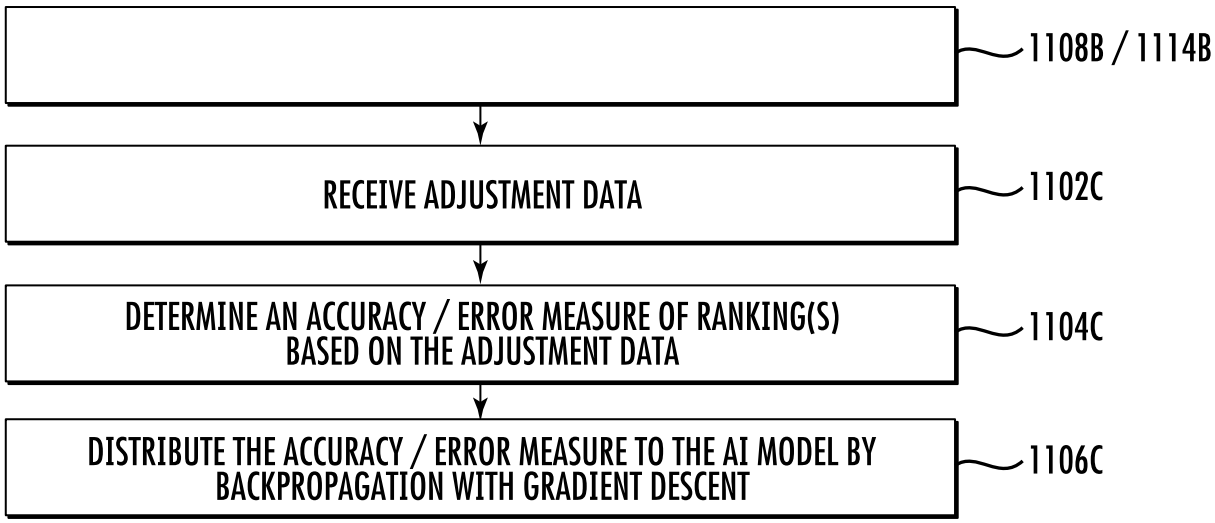
1108B / 1114B
RECEIVE ADJUSTMENT DATA
1102C
DETERMINE AN ACCURACY / ERROR MEASURE OF RANKING(S) BASED ON THE ADJUSTMENT DATA
1104C
DISTRIBUTE THE ACCURACY / ERROR MEASURE TO THE AI MODEL BY BACKPROPAGATION WITH GRADIENT DESCENT
1106C

FIG. 11C

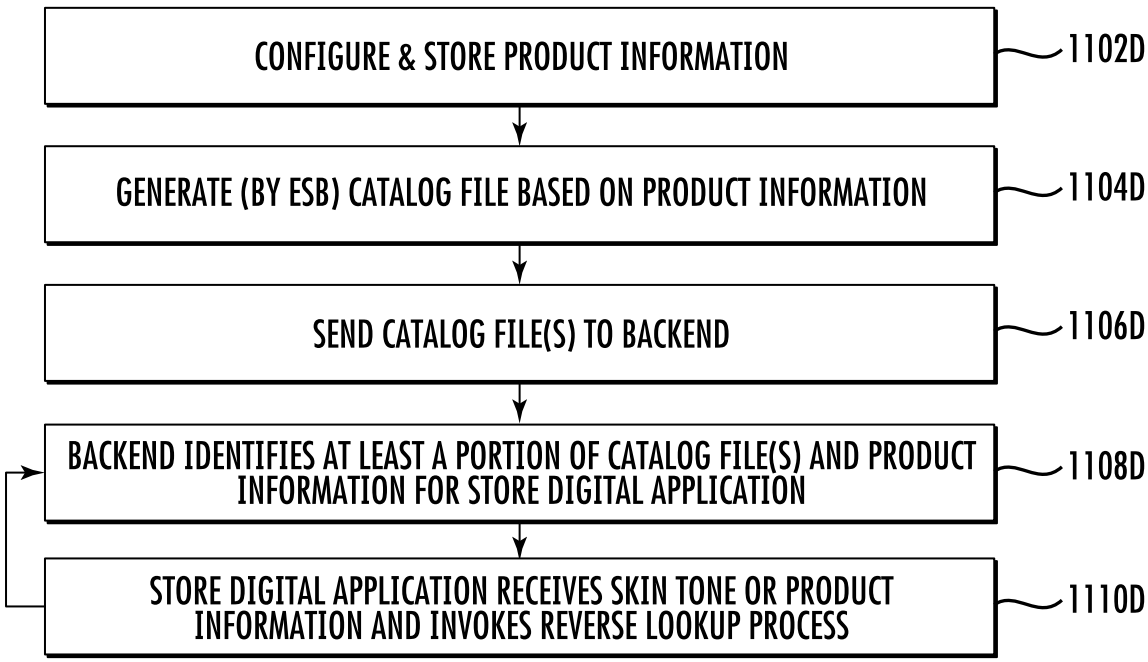
CONFIGURE & STORE PRODUCT INFORMATION
1102D
GENERATE (BY ESB) CATALOG FILE BASED ON PRODUCT INFORMATION
1104D
SEND CATALOG FILE(S) TO BACKEND
1106D
BACKEND IDENTIFIES AT LEAST A PORTION OF CATALOG FILE(S) AND PRODUCT INFORMATION FOR STORE DIGITAL APPLICATION
1108D
STORE DIGITAL APPLICATION RECEIVES SKIN TONE OR PRODUCT INFORMATION AND INVOKES REVERSE LOOKUP PROCESS
1110D

FIG. 11D

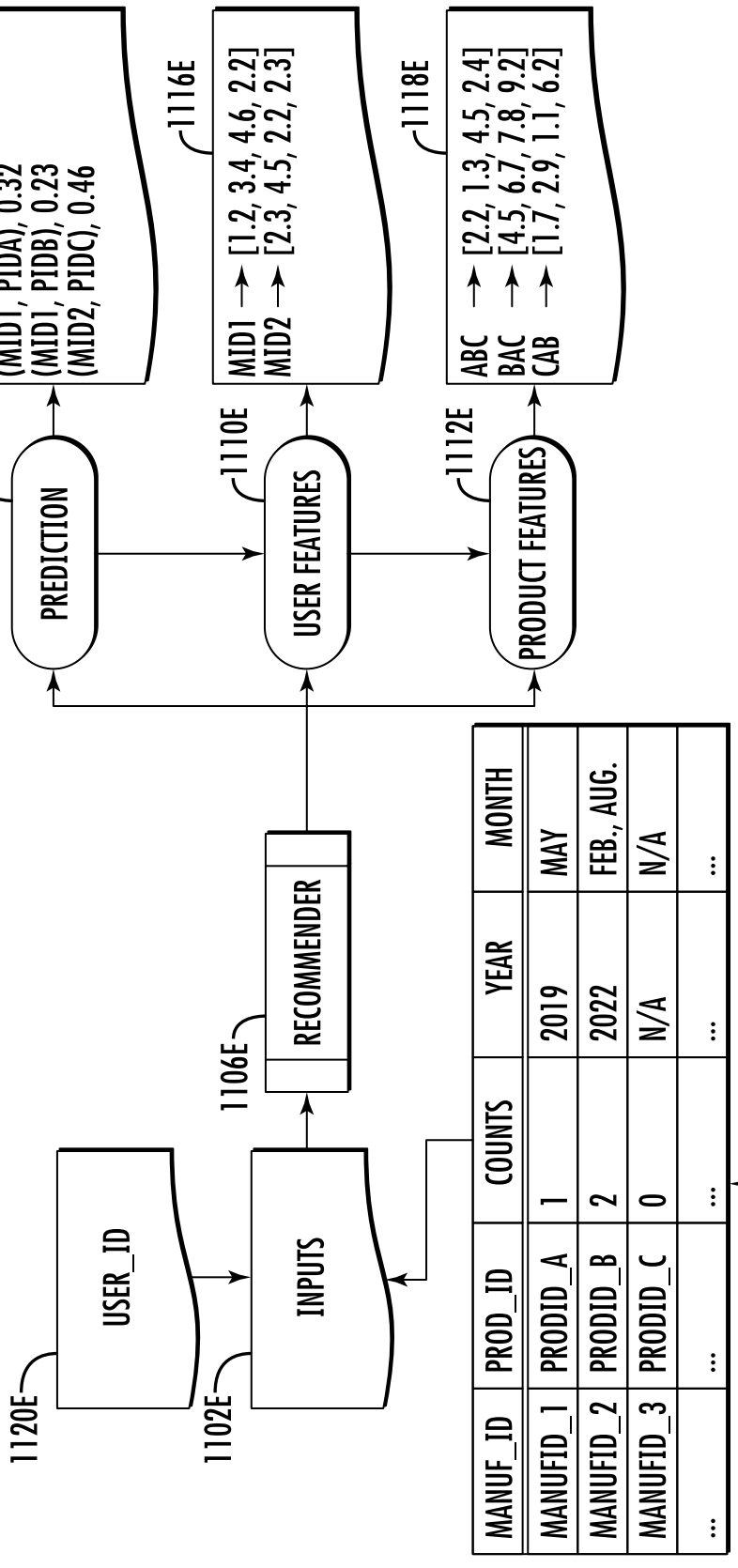
1114E
(MID1, PIDA), 0.32
(MID1, PIDB), 0.23
(MID2, PIDC), 0.46
1116E
MID1 → [1.2, 3.4, 4.6, 2.2]
MID2 → [2.3, 4.5, 2.2, 2.3]
1118E
ABC → [2.2, 1.3, 4.5, 2.4]
BAC → [4.5, 6.7, 7.8, 9.2]
CAB → [1.7, 2.9, 1.1, 6.2]
1108E
PREDICTION
1110E
USER FEATURES
1112E
PRODUCT FEATURES
1106E
RECOMMENDER
1120E
USER_ID
1102E
INPUTS
1104E
MANUF_ID | PROD_ID | COUNTS | YEAR | MONTH
MANUFID_1 | PRODID_A | 1 | 2019 | MAY
MANUFID_2 | PRODID_B | 2 | 2022 | FEB., AUG.
MANUFID_3 | PRODID_C | 0 | N/A | N/A
... | ... | ... | ... | ...

FIG. 11E

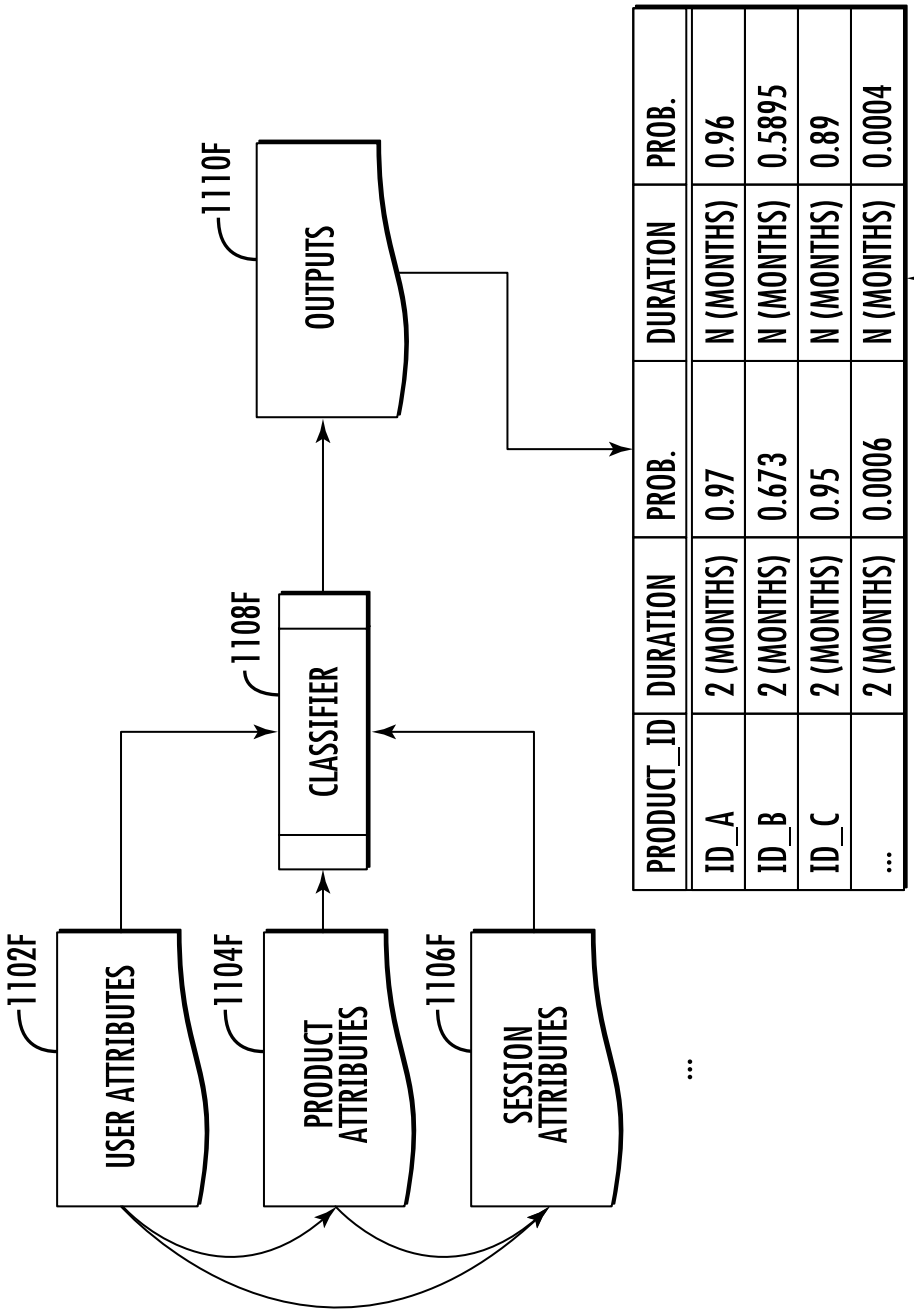
1102F
USER ATTRIBUTES
1104F
PRODUCT ATTRIBUTES
1106F
SESSION ATTRIBUTES
...
1108F
CLASSIFIER
1110F
OUTPUTS
PRODUCT_ID | DURATION | PROB. | DURATION | PROB.
ID_A | 2 (MONTHS) | 0.97 | N (MONTHS) | 0.96
ID_B | 2 (MONTHS) | 0.673 | N (MONTHS) | 0.5895
ID_C | 2 (MONTHS) | 0.95 | N (MONTHS) | 0.89
... | 2 (MONTHS) | 0.0006 | N (MONTHS) | 0.0004
1112F

FIG. 11F

VARIABLE	VALUE	DESCRIPTION	UPDATED
lOFFSET	19.5	STARTING POINT OFFSET FOR L	
lSEGMENTSIZE	7.5	DISTANCE OF L PER SEGMENT	
lSUBSEGMENTSIZE	2.5	DISTANCE OF L PER SUBSEGMENT	
lSEGMENTSMAX	9	MAXIMUM L SEGMENTS	
lSEGMENTGROUPING	[0,0,0,1,1,1,2,2,2]	LINK DEPTH SEGMENTS TO	
cOFFSET	[6,6,6]	STARTING POINT OFFSET FOR C	
cSEGMENTSIZE	[12,12,12]	DISTANCE OF C PER SEGMENT	
cSEGMENTSMAX	3	MAXIMUM C SEGMENTS	
hOFFSET	[39,39,39]	STARTING POINT OFFSET OF H	
hSEGMENTSIZE	[5,5,5]	DISTANCE OF H PER SEGMENT	

FIG. 12A

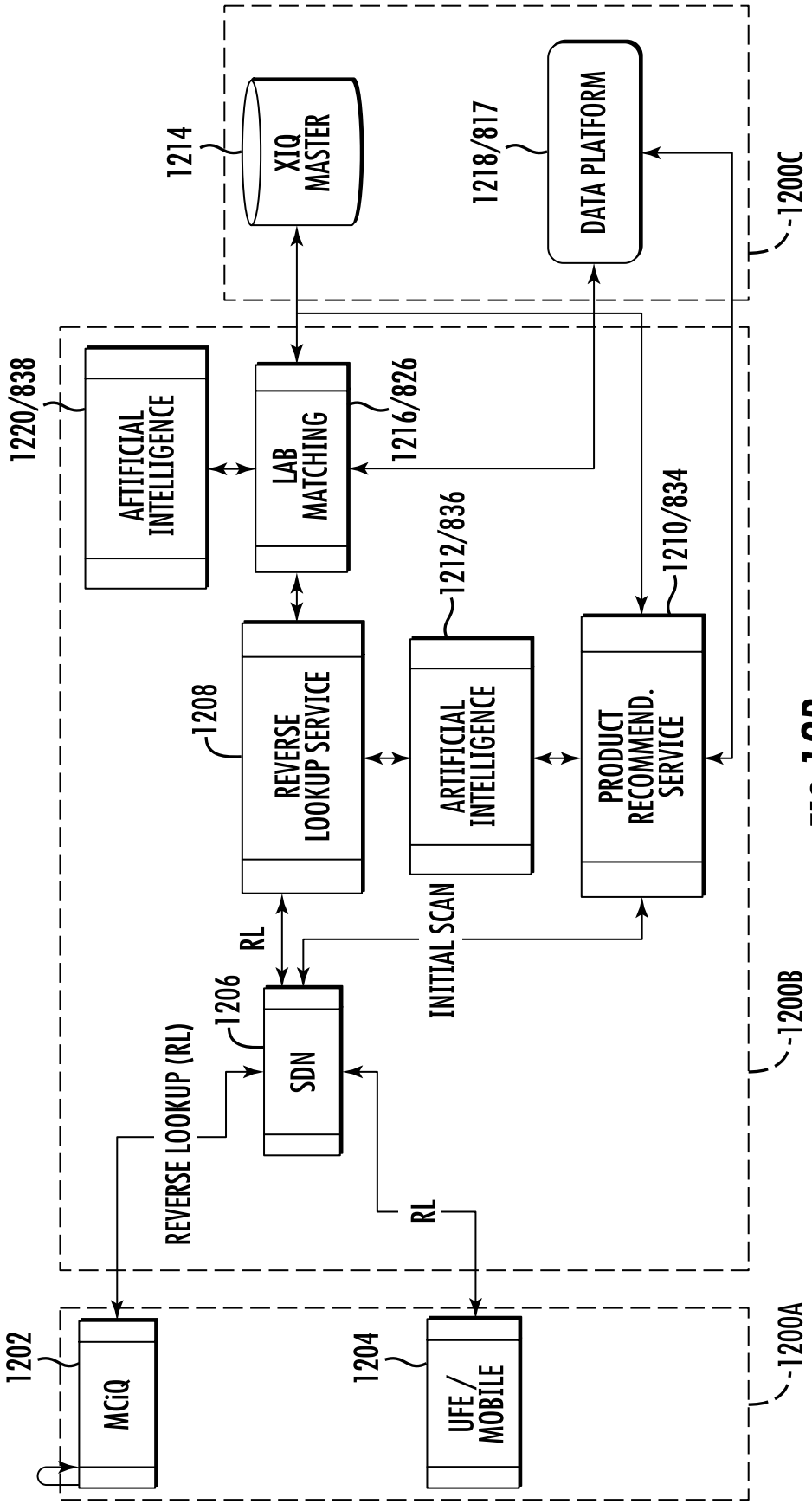
1214
XIQ MASTER
1218/817
DATA PLATFORM
-1200C
1220/838
AFTIFICIAL INTELLIGENCE
LAB MATCHING
1216/826
1212/836
1210/834
1208
REVERSE LOOKUP SERVICE
ARTIFICIAL INTELLIGENCE
PRODUCT RECOMMEND. SERVICE
RL
INITIAL SCAN
1206
SDN
REVERSE LOOKUP (RL)
RL
-1200B
1202
MCiQ
1204
UFE / MOBILE
-1200A

FIG. 12B

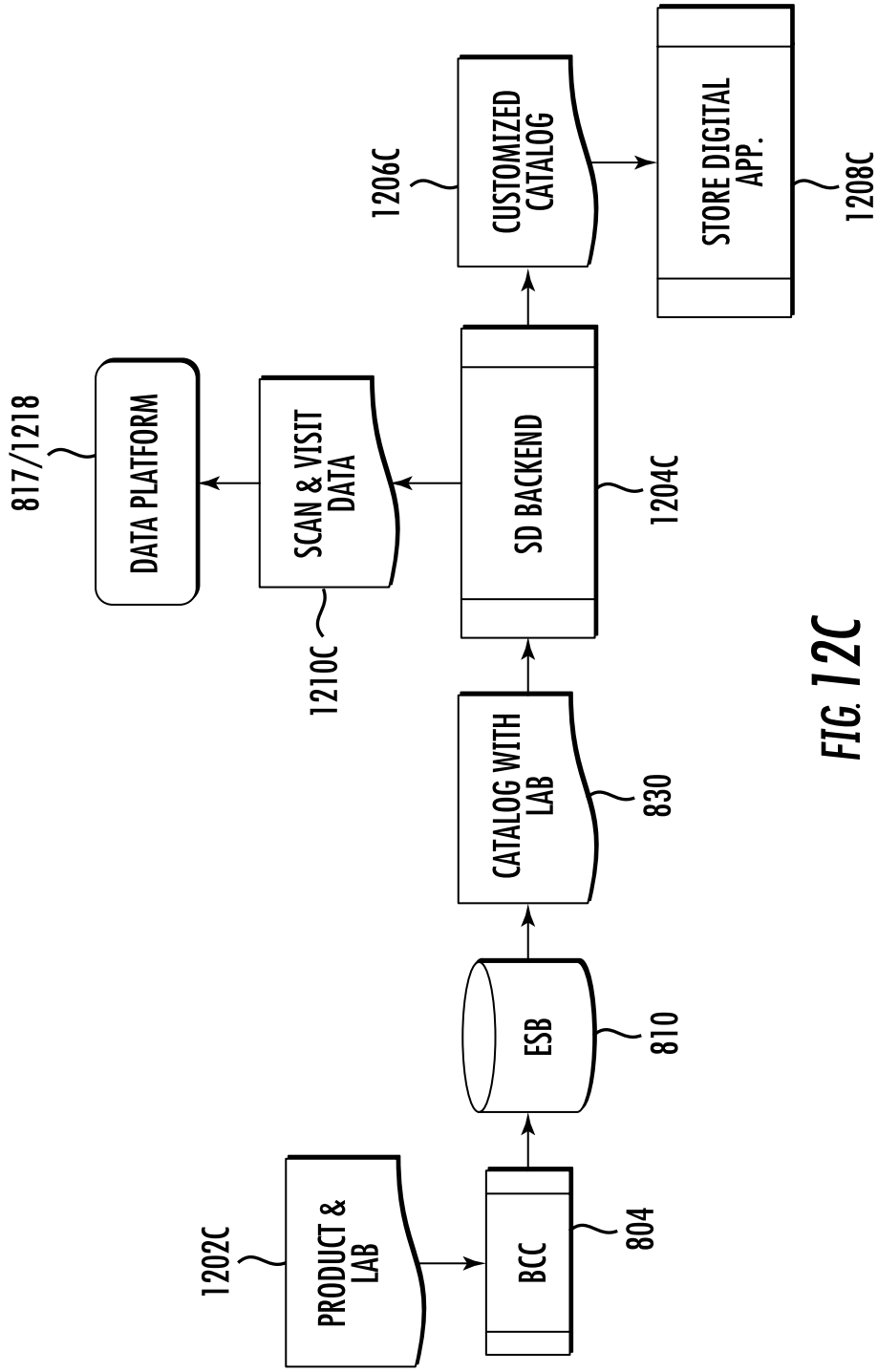
1202C
PRODUCT & LAB
BCC
804
ESB
810
CATALOG WITH LAB
830
SD BACKEND
1204C
1210C
SCAN & VISIT DATA
817/1218
DATA PLATFORM
1206C
CUSTOMIZED CATALOG
STORE DIGITAL APP.
1208C

FIG. 12C

SEGMENT	ENGLISH	FRENCH	RANGE
1	DEEP		L < 27
2	DARK		27 ≤ L <34.5
3	TAN		34.5 ≤ L < 42
4	MEDIUM DARK		42 ≤ L < 49.5
5	MEDIUM		49.5 ≤ L < 57
6	LIGHT MEDIUM		57 ≤ L < 64.5
7	LIGHT		64.5 ≤ L < 72
8	FAIR		72 ≤ L < 79.5
9	VERY FAIR		79.5 ≤ L

FIG. 13A

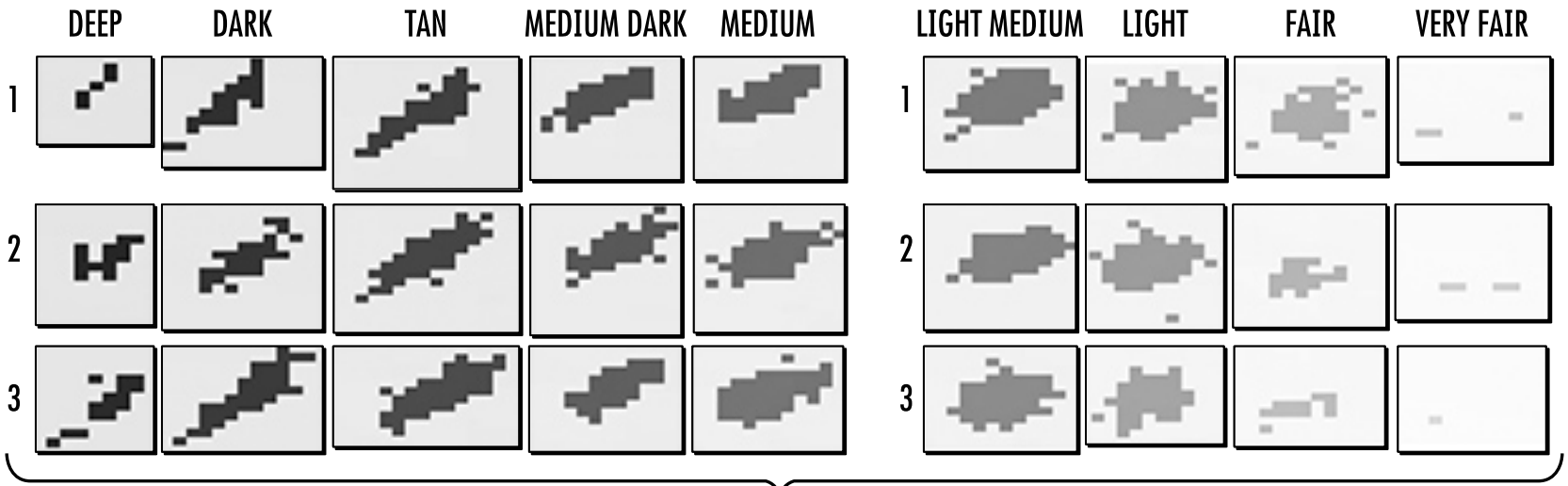

FIG. 13B

cGROUP	C RANGE	ADD'TL INFO
1	$C < 18$	LOW SATURATION | MUTED
2	$18 \leq C < 30$	MEDIUM SATURATION | MEDIUM
3	$30 \leq C$	HIGH SATURATION | RICH/INTENSE

FIG. 13C

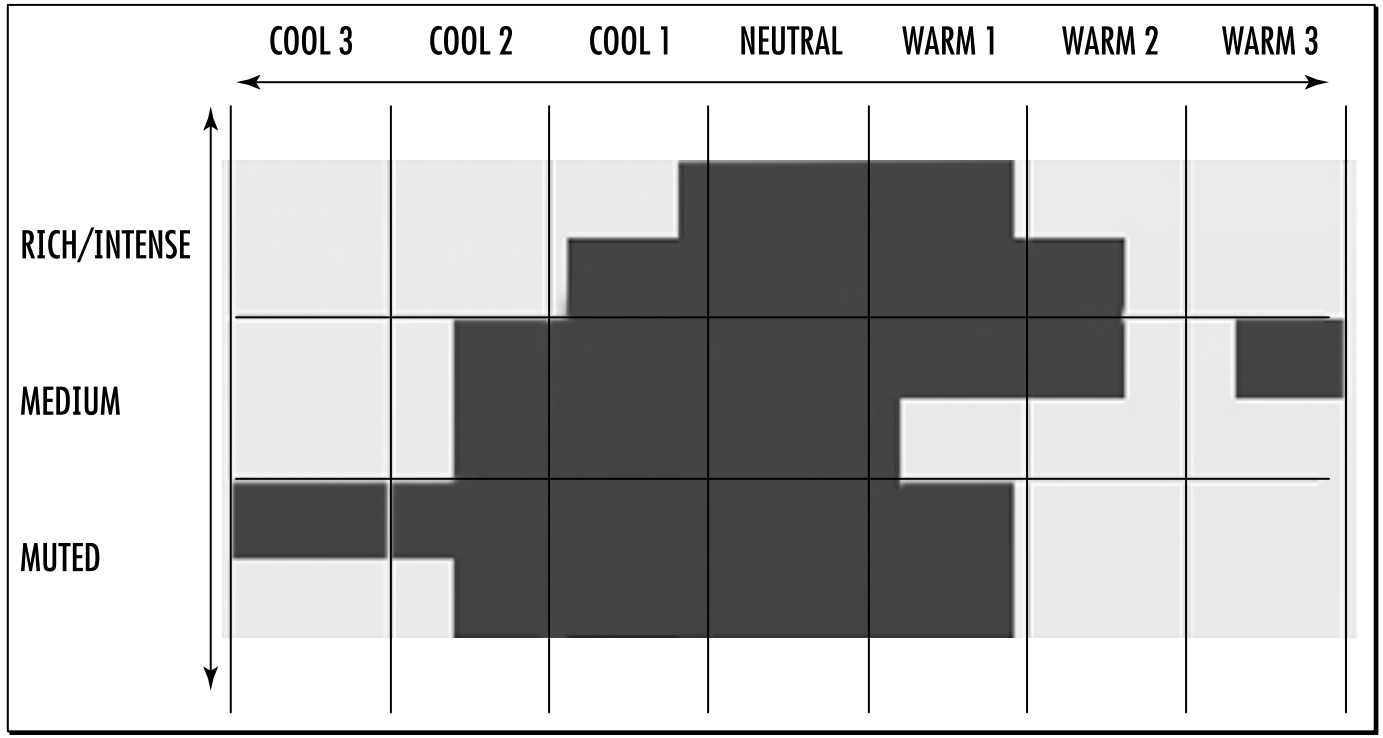

FIG. 13D

hGROUP	H RANGE	ADD'TL INFO
1	$H < 44$	HIGH PINK
2	$44 \leq H < 49$	MEDIUM PINK
3	$49 \leq H < 54$	LOW PINK
4	$54 \leq H < 59$	NEUTRAL
5	$59 \leq H < 64$	LOW YELLOW
6	$64 \leq H < 69$	MEDIUM YELLOW
7	$69 \leq H$	HIGH YELLOW

FIG. 13E

cSEGMENT	hSEGMENT	ENGLISH	FRENCH
1	1	COOL 3 - INTENSITY 1	COOL 3 - INTENSITY 1
1	2	COOL 2 - INTENSITY 1	COOL 2 - INTENSITY 1
1	3	COOL 1 - INTENSITY 1	COOL 1 - INTENSITY 1
1	4	NEUTRAL - INTENSITY 1	NEUTRAL - INTENSITY 1
1	5	WARM 1 - INTENSITY 1	WARM 1 - INTENSITY 1
1	6	WARM 2 - INTENSITY 1	WARM 2 - INTENSITY 1
1	7	WARM 3 - INTENSITY 1	WARM 3 - INTENSITY 1
2	1	COOL 3 - INTENSITY 2	COOL 3 - INTENSITY 2
2	2	COOL 2 - INTENSITY 2	COOL 2 - INTENSITY 2
2	3	COOL 1 - INTENSITY 2	COOL 1 - INTENSITY 2
3	7	WARM 3 - INTENSITY 3	WARM 3 - INTENSITY 3
2	4	NEUTRAL - INTENSITY 2	NEUTRAL - INTENSITY 2
2	5	WARM 1 - INTENSITY 2	WARM 1 - INTENSITY 2
2	6	WARM 2 - INTENSITY 2	WARM 2 - INTENSITY 2
2	7	WARM 3 - INTENSITY 2	WARM 3 - INTENSITY 2
3	1	COL 3 - INTENSITY 3	COL 3 - INTENSITY 3
3	2	COL 2 - INTENSITY 3	COL 2 - INTENSITY 3
3	3	COL 1 - INTENSITY 3	COL 1 - INTENSITY 3
3	4	NEUTRAL - INTENSITY 3	NEUTRAL - INTENSITY 3
3	5	WARM 1 - INTENSITY 3	WARM 1 - INTENSITY 3
3	6	WARM 2 - INTENSITY 3	WARM 2 - INTENSITY 3
3	7	WARM 3 - INTENSITY 3	WARM 3 - INTENSITY 3

FIG. 13F

1302G

cSEGMENT	hSEGMENT	ENGLISH	FRENCH
1	1	COOL BLUE 3	
1	2	COOL BLUE 2	
1	3	COOL BLUE 1	
1	4	NEUTRAL OLIVE	
1	5	WARM OLIVE 1	
1	6	WARM OLIVE 2	
1	7	WARM OLIVE 3	
2	1	COOL 3	
2	2	COOL 2	
2	3	COOL 1	
2	4	NEUTRAL	
2	5	WARM 1	
2	6	WARM 2	
2	7	WARM 3	
3	1	COOL RED 3	
3	2	COOL RED 2	
3	3	COOL RED 1	
3	4	NEUTRAL BRONZE	
3	5	WARM GOLDEN 1	
3	6	WARM GOLDEN 2	
3	7	WARM GOLDEN 3	

1304G

cSEGMENT	hSEGMENT	ENGLISH	FRENCH
1	1	COOL OLIVE 3	
1	2	COOL OLIVE 2	
1	3	COOL OLIVE 1	
1	4	NEUTRAL OLIVE	
1	5	WARM OLIVE 1	
1	6	WARM OLIVE 2	
1	7	WARM OLIVE 3	
2	1	COOL 3	
2	2	COOL 2	
2	3	COOL 1	
2	4	NEUTRAL	
2	5	WARM 1	
2	6	WARM 2	
2	7	WARM 3	
3	1	COOL ROSEY 3	
3	2	COOL ROSEY 2	
3	3	COOL ROSEY 1	
3	4	NEUTRAL PEACH	
3	5	WARM GOLDEN 1	
3	6	WARM GOLDEN 2	
3	7	WARM GOLDEN 3	

FIG. 13G

1306G

cSEGMENT	hSEGMENT	ENGLISH	FRENCH
1	1	COOL BEIGE 3	
1	2	COOL BEIGE 2	
1	3	COOL BEIGE 1	
1	4	NEUTRAL BEIGE	
1	5	WARM OLIVE 1	
1	6	WARM OLIVE 2	
1	7	WARM OLIVE 3	
2	1	COOL 3	
2	2	COOL 2	
2	3	COOL 1	
2	4	NEUTRAL	
2	5	WARM 1	
2	6	WARM 2	
2	7	WARM 3	
3	1	COOL PINK 3	
3	2	COOL PINK 2	
3	3	COOL PINK Y 1	
3	4	NEUTRAL PEACH	
3	5	WARM YELLOW 1	
3	6	WARM YELLOW 2	
3	7	WARM YELLOW 3	

FIG. 13H

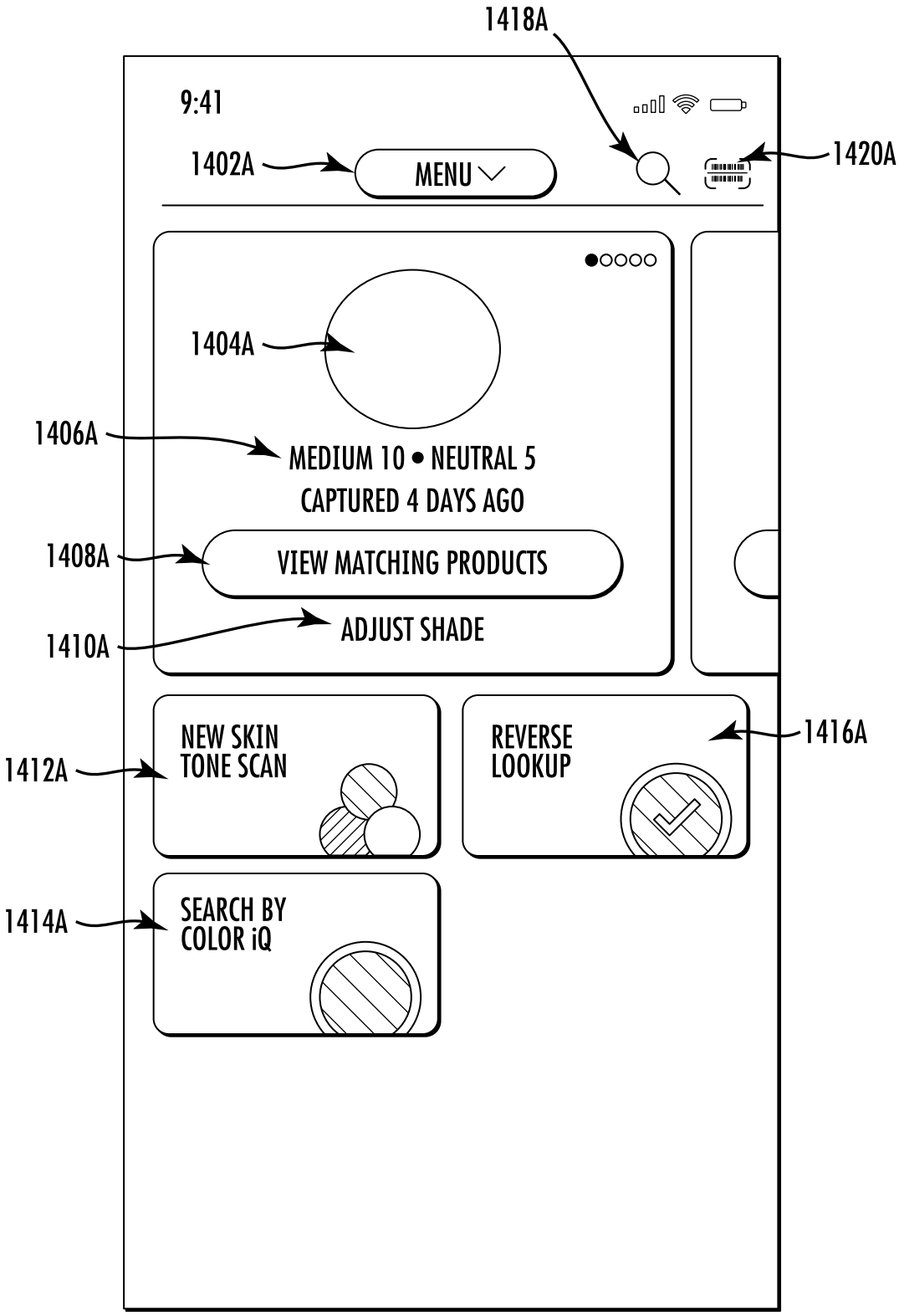
1418A
9:41
1402A
MENU
1420A
1404A
1406A
MEDIUM 10 • NEUTRAL 5
CAPTURED 4 DAYS AGO
1408A
VIEW MATCHING PRODUCTS
1410A
ADJUST SHADE
NEW SKIN TONE SCAN
1412A
REVERSE LOOKUP
1416A
SEARCH BY COLOR iQ
1414A

FIG. 14A

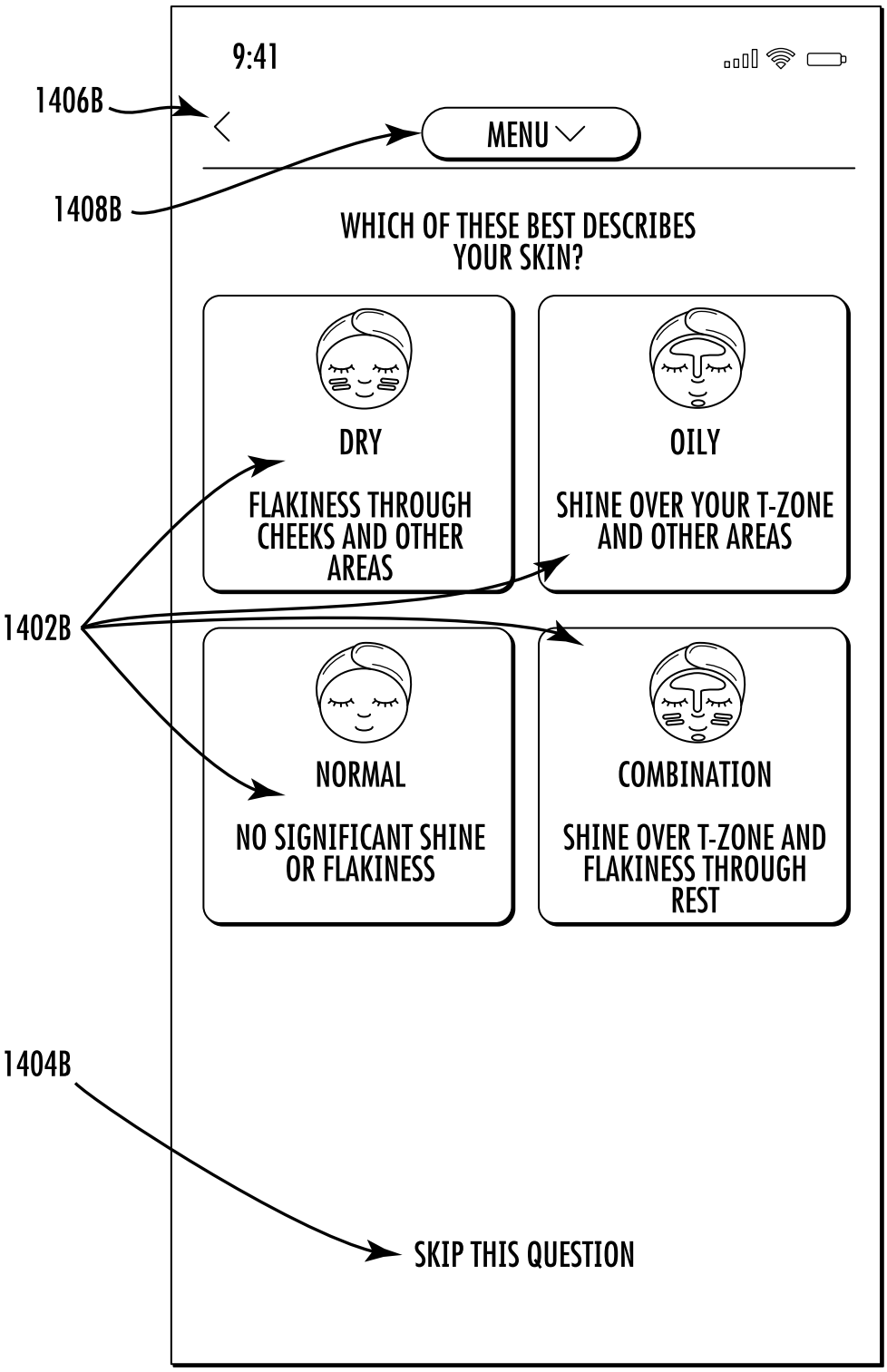
9:41
1406B
MENU
1408B
WHICH OF THESE BEST DESCRIBES YOUR SKIN?
DRY
FLAKINESS THROUGH CHEEKS AND OTHER AREAS
OILY
SHINE OVER YOUR T-ZONE AND OTHER AREAS
1402B
NORMAL
NO SIGNIFICANT SHINE OR FLAKINESS
COMBINATION
SHINE OVER T-ZONE AND FLAKINESS THROUGH REST
1404B
SKIP THIS QUESTION

FIG. 14B

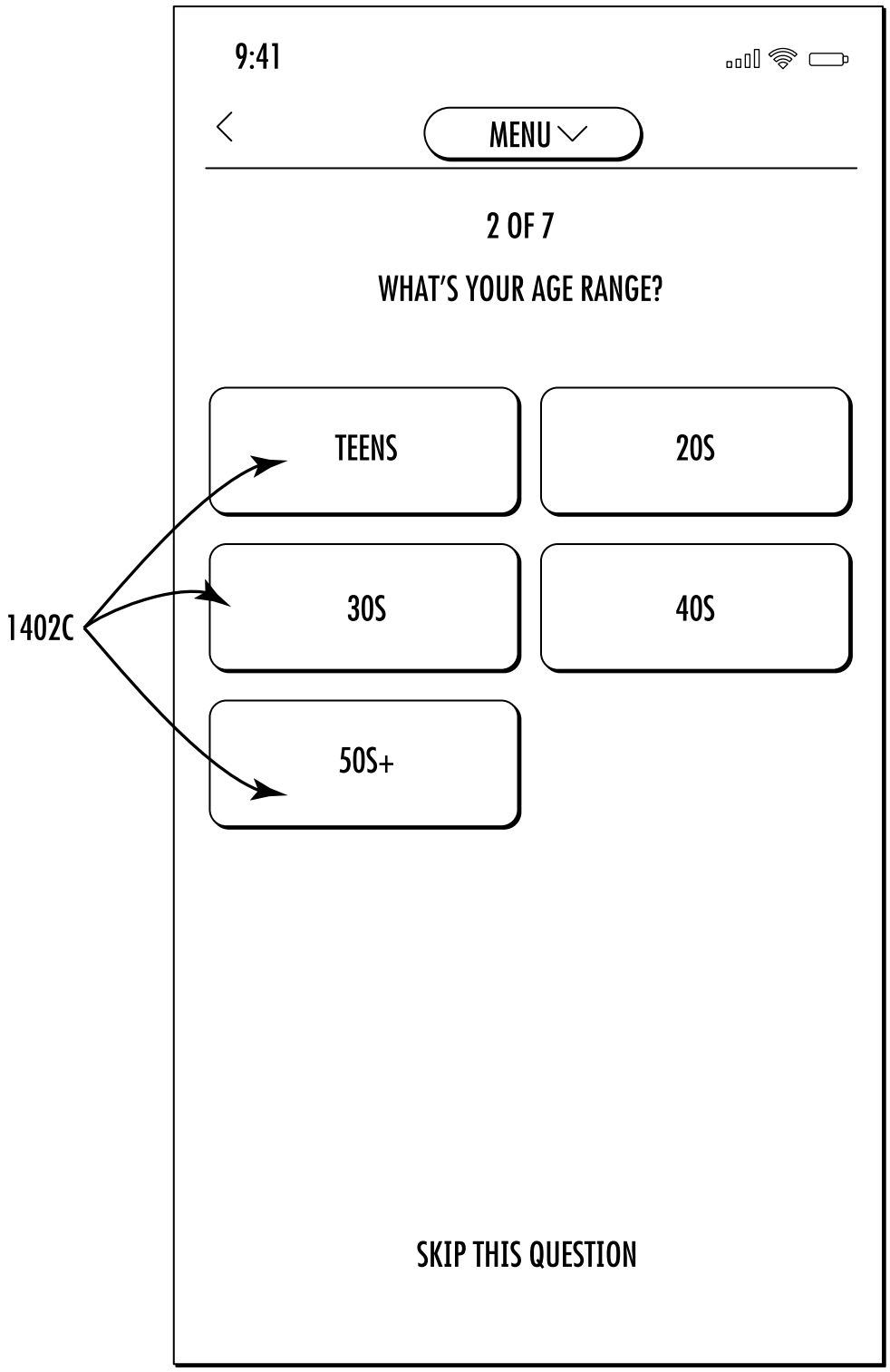
9:41
MENU
2 OF 7
WHAT'S YOUR AGE RANGE?
TEENS
20S
30S
40S
50S+
1402C
SKIP THIS QUESTION

FIG. 14C

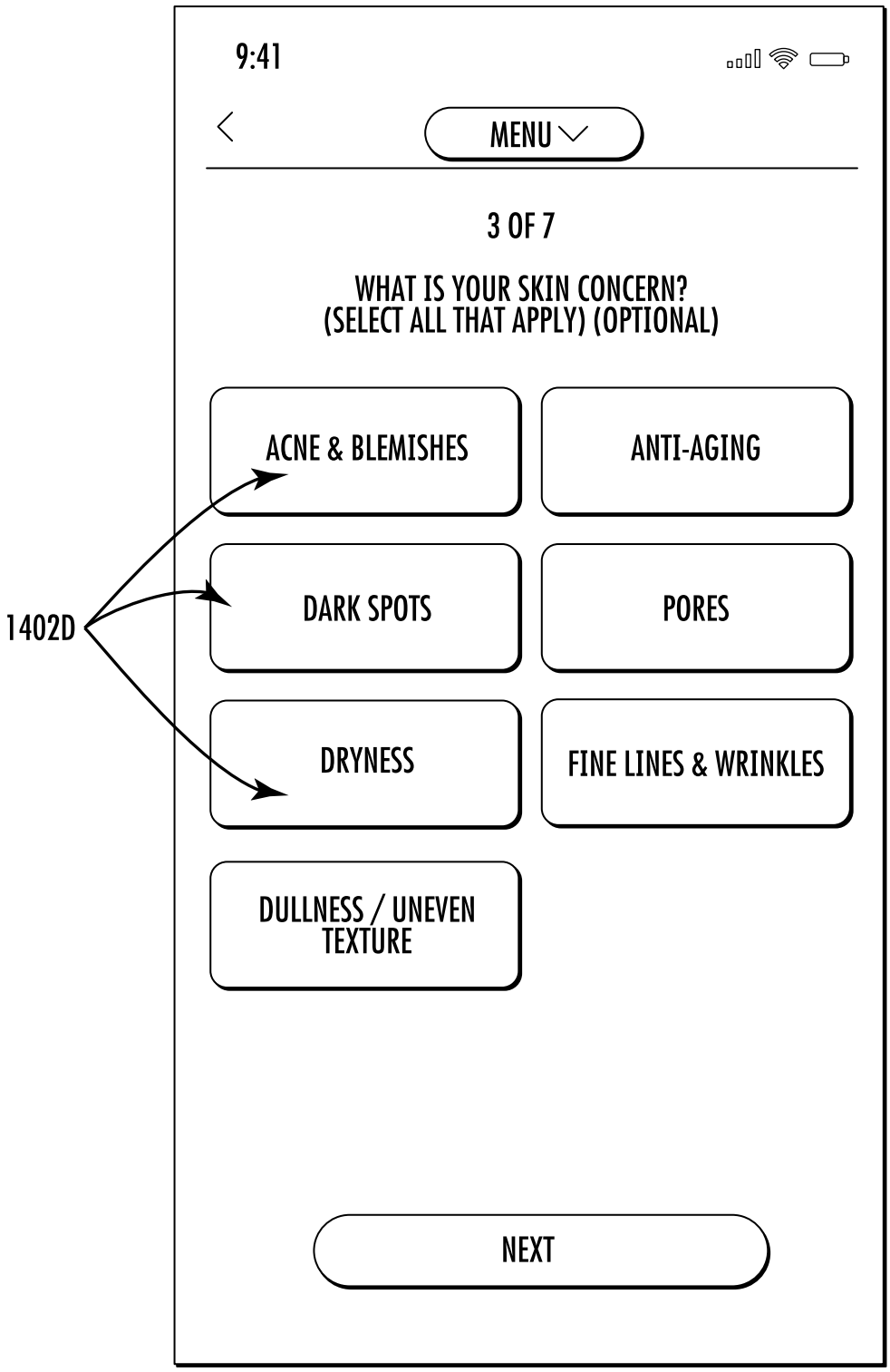
9:41
MENU
3 OF 7
WHAT IS YOUR SKIN CONCERN?
(SELECT ALL THAT APPLY) (OPTIONAL)
ACNE & BLEMISHES
ANTI-AGING
DARK SPOTS
PORES
DRYNESS
FINE LINES & WRINKLES
DULLNESS / UNEVEN TEXTURE
NEXT
1402D

FIG. 14D

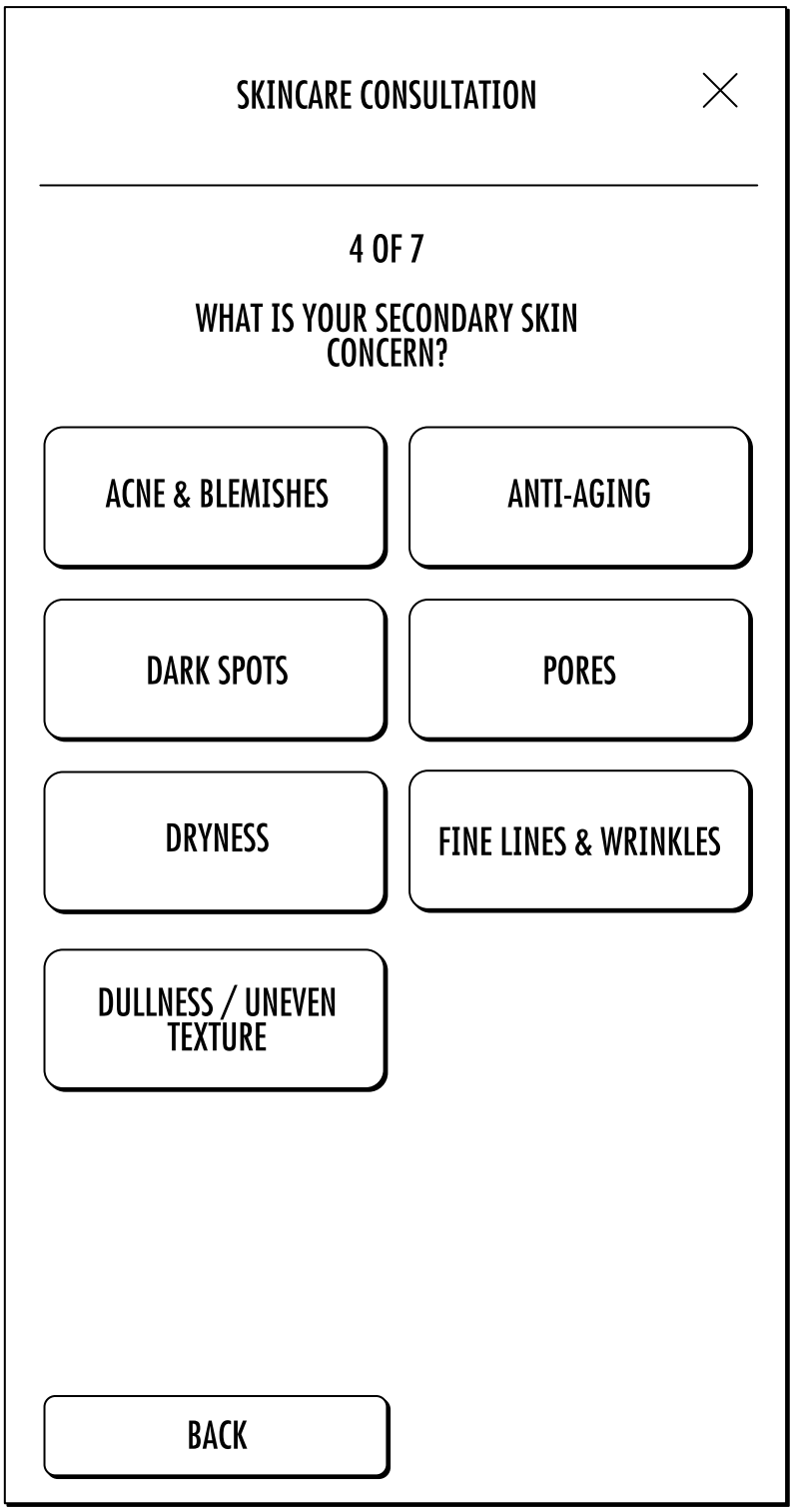
SKINCARE CONSULTATION
4 OF 7
WHAT IS YOUR SECONDARY SKIN CONCERN?
ACNE & BLEMISHES
ANTI-AGING
DARK SPOTS
PORES
DRYNESS
FINE LINES & WRINKLES
DULLNESS / UNEVEN TEXTURE
BACK

FIG. 14E

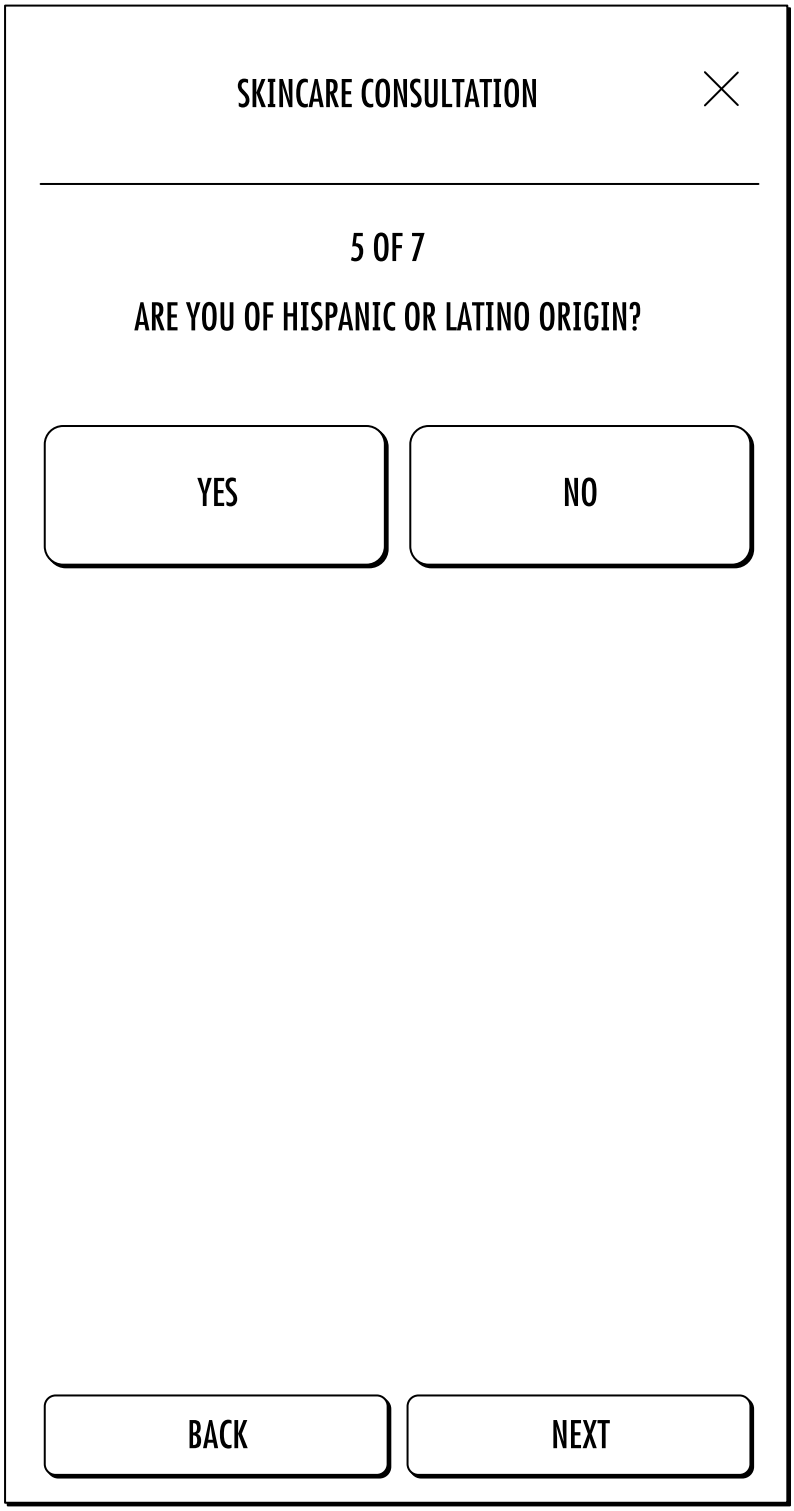
SKINCARE CONSULTATION
5 OF 7
ARE YOU OF HISPANIC OR LATINO ORIGIN?
YES
NO
BACK
NEXT

FIG. 14F

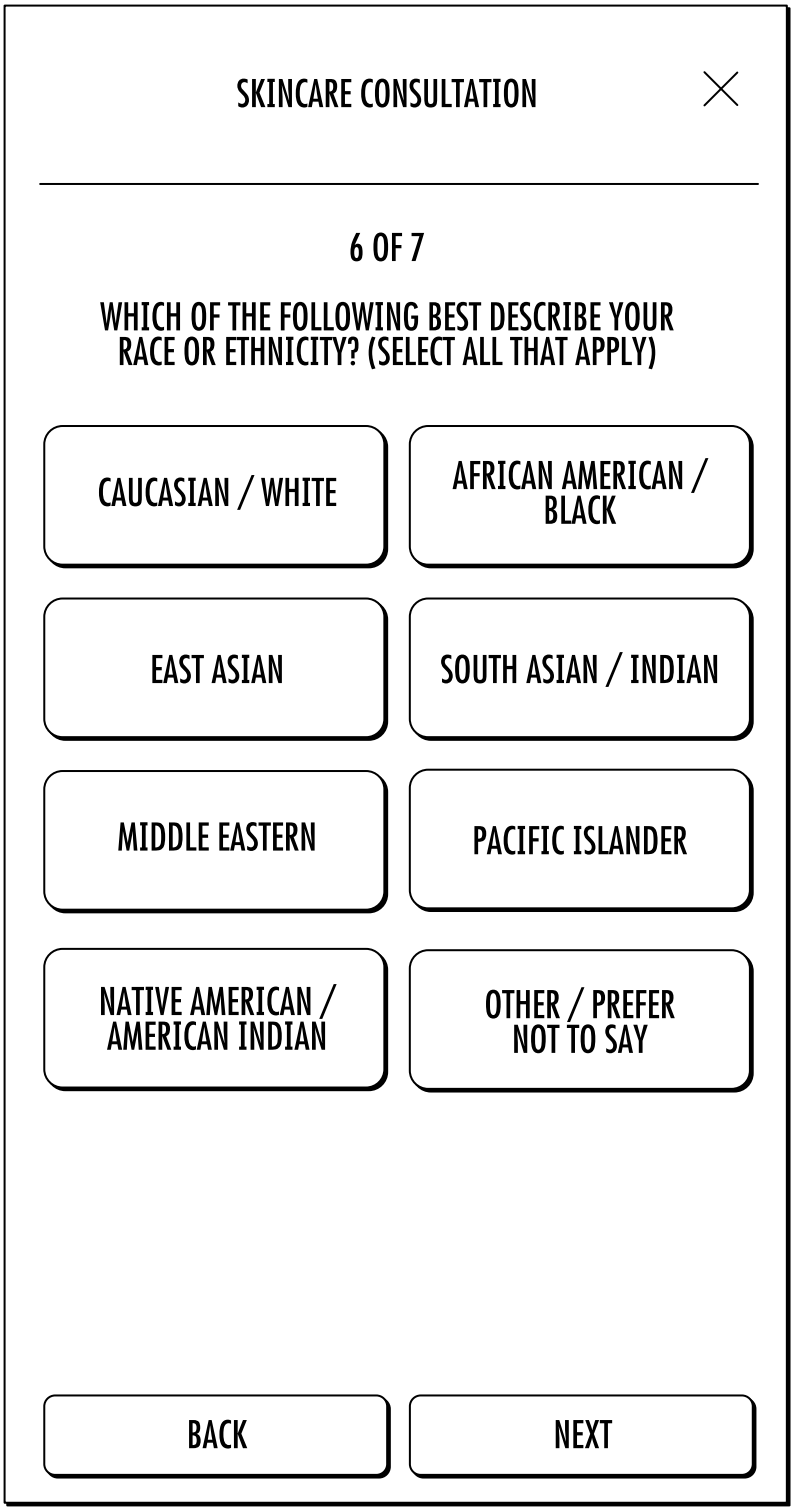
SKINCARE CONSULTATION
6 OF 7
WHICH OF THE FOLLOWING BEST DESCRIBE YOUR RACE OR ETHNICITY? (SELECT ALL THAT APPLY)
CAUCASIAN / WHITE
AFRICAN AMERICAN / BLACK
EAST ASIAN
SOUTH ASIAN / INDIAN
MIDDLE EASTERN
PACIFIC ISLANDER
NATIVE AMERICAN / AMERICAN INDIAN
OTHER / PREFER NOT TO SAY
BACK
NEXT

FIG. 14G

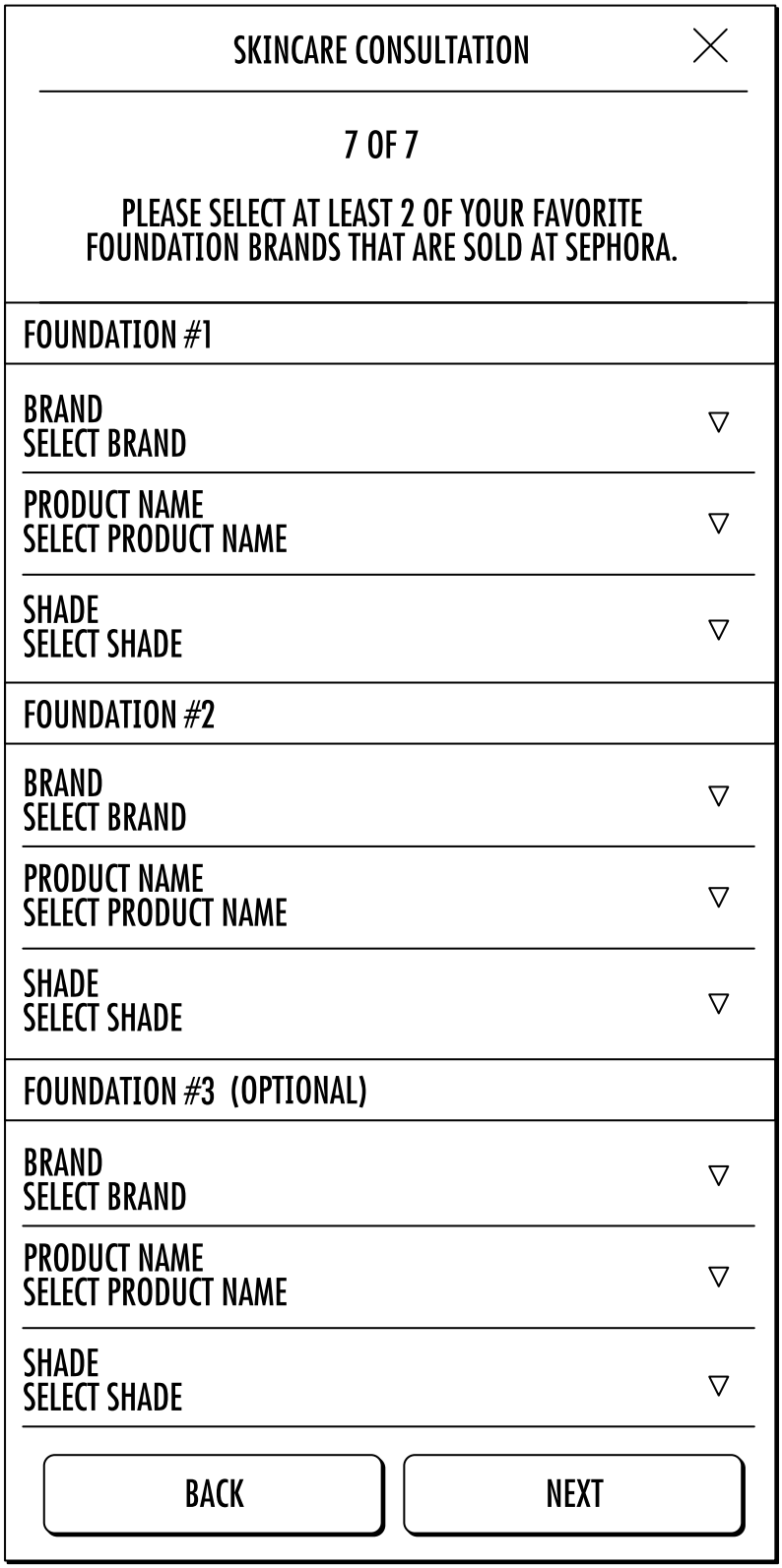
SKINCARE CONSULTATION
7 OF 7
PLEASE SELECT AT LEAST 2 OF YOUR FAVORITE FOUNDATION BRANDS THAT ARE SOLD AT SEPHORA.
FOUNDATION #1
BRAND
SELECT BRAND
PRODUCT NAME
SELECT PRODUCT NAME
SHADE
SELECT SHADE
FOUNDATION #2
BRAND
SELECT BRAND
PRODUCT NAME
SELECT PRODUCT NAME
SHADE
SELECT SHADE
FOUNDATION #3 (OPTIONAL)
BRAND
SELECT BRAND
PRODUCT NAME
SELECT PRODUCT NAME
SHADE
SELECT SHADE
BACK
NEXT

FIG. 14H

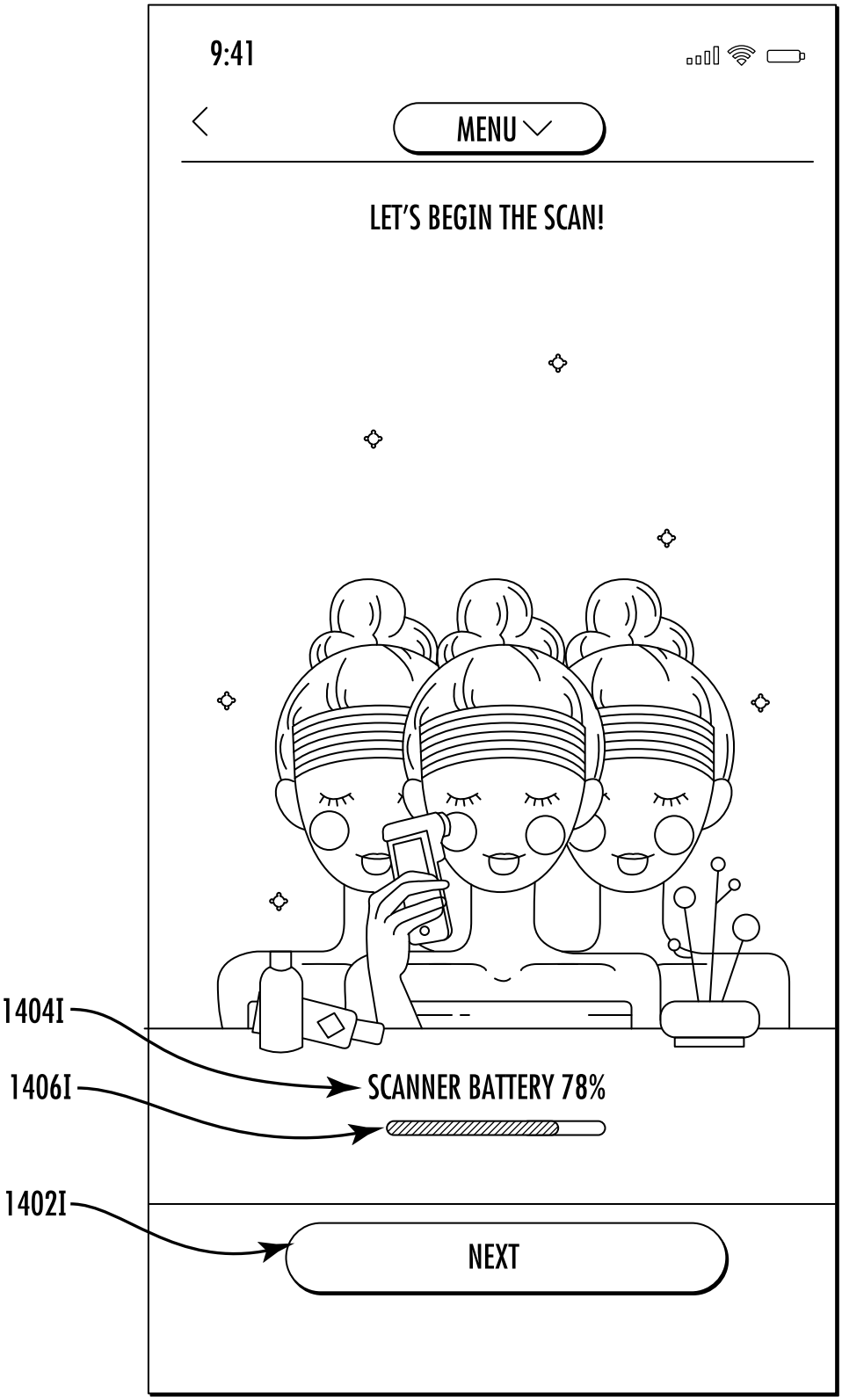
9:41
MENU
LET'S BEGIN THE SCAN!
1404I
SCANNER BATTERY 78%
1406I
1402I
NEXT

FIG. 14I

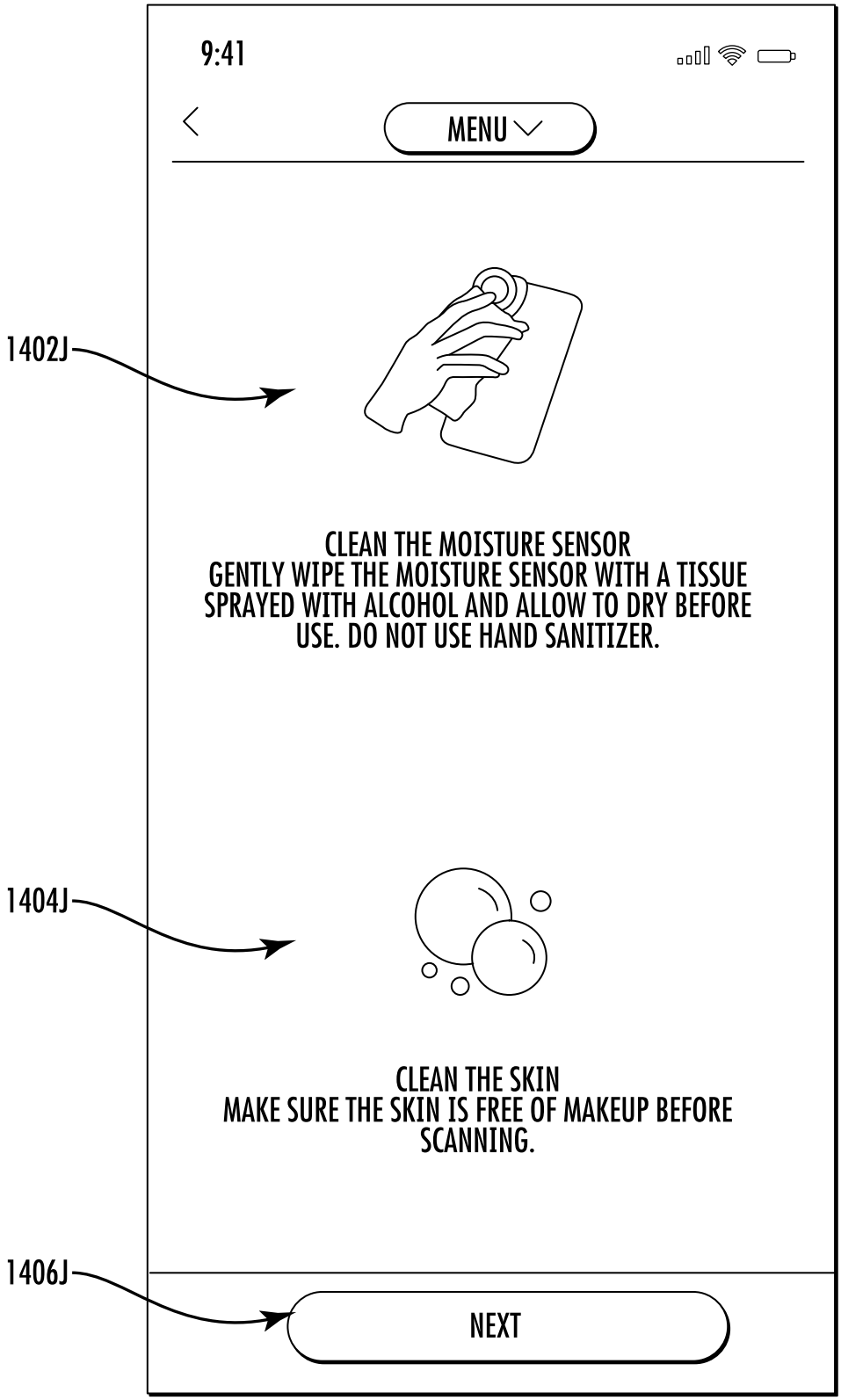
9:41
MENU
1402J
CLEAN THE MOISTURE SENSOR
GENTLY WIPE THE MOISTURE SENSOR WITH A TISSUE SPRAYED WITH ALCOHOL AND ALLOW TO DRY BEFORE USE. DO NOT USE HAND SANITIZER.
1404J
CLEAN THE SKIN
MAKE SURE THE SKIN IS FREE OF MAKEUP BEFORE SCANNING.
1406J
NEXT

FIG. 14J

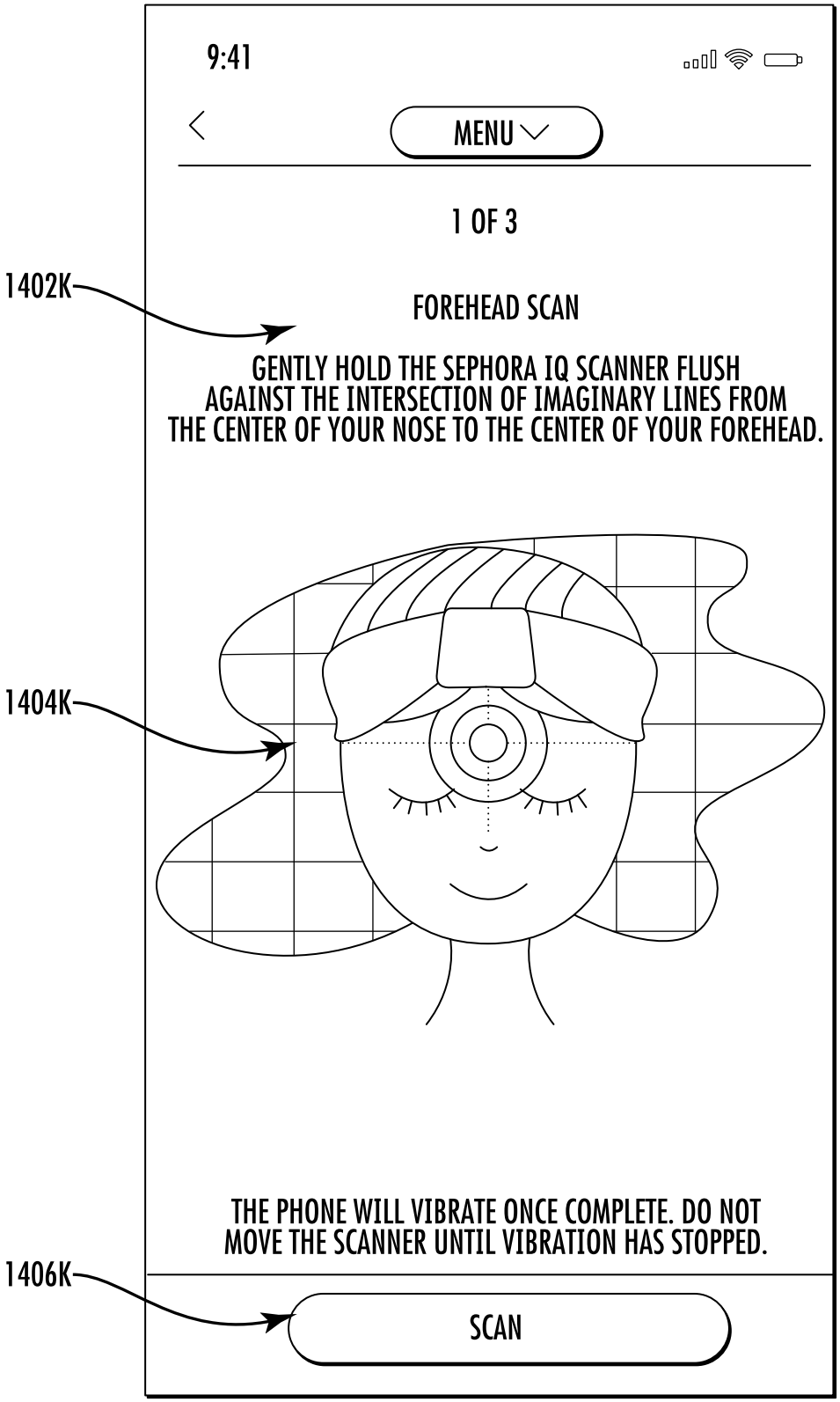
9:41
MENU
1 OF 3
1402K
FOREHEAD SCAN
GENTLY HOLD THE SEPHORA IQ SCANNER FLUSH AGAINST THE INTERSECTION OF IMAGINARY LINES FROM THE CENTER OF YOUR NOSE TO THE CENTER OF YOUR FOREHEAD.
1404K
THE PHONE WILL VIBRATE ONCE COMPLETE. DO NOT MOVE THE SCANNER UNTIL VIBRATION HAS STOPPED.
1406K
SCAN

FIG. 14K

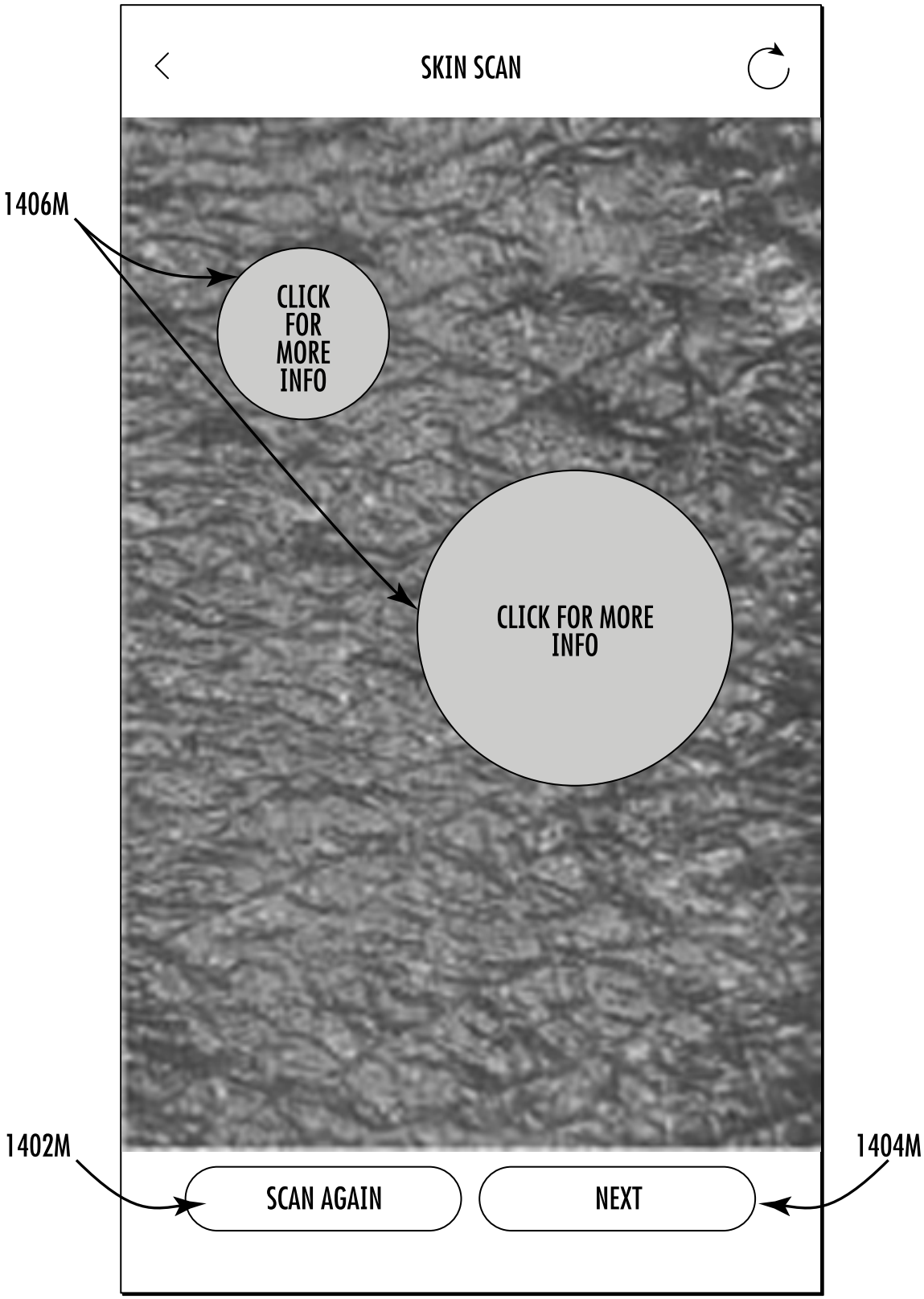
SKIN SCAN
1406M
CLICK FOR MORE INFO
CLICK FOR MORE INFO
1402M
1404M
SCAN AGAIN
NEXT

FIG. 14M

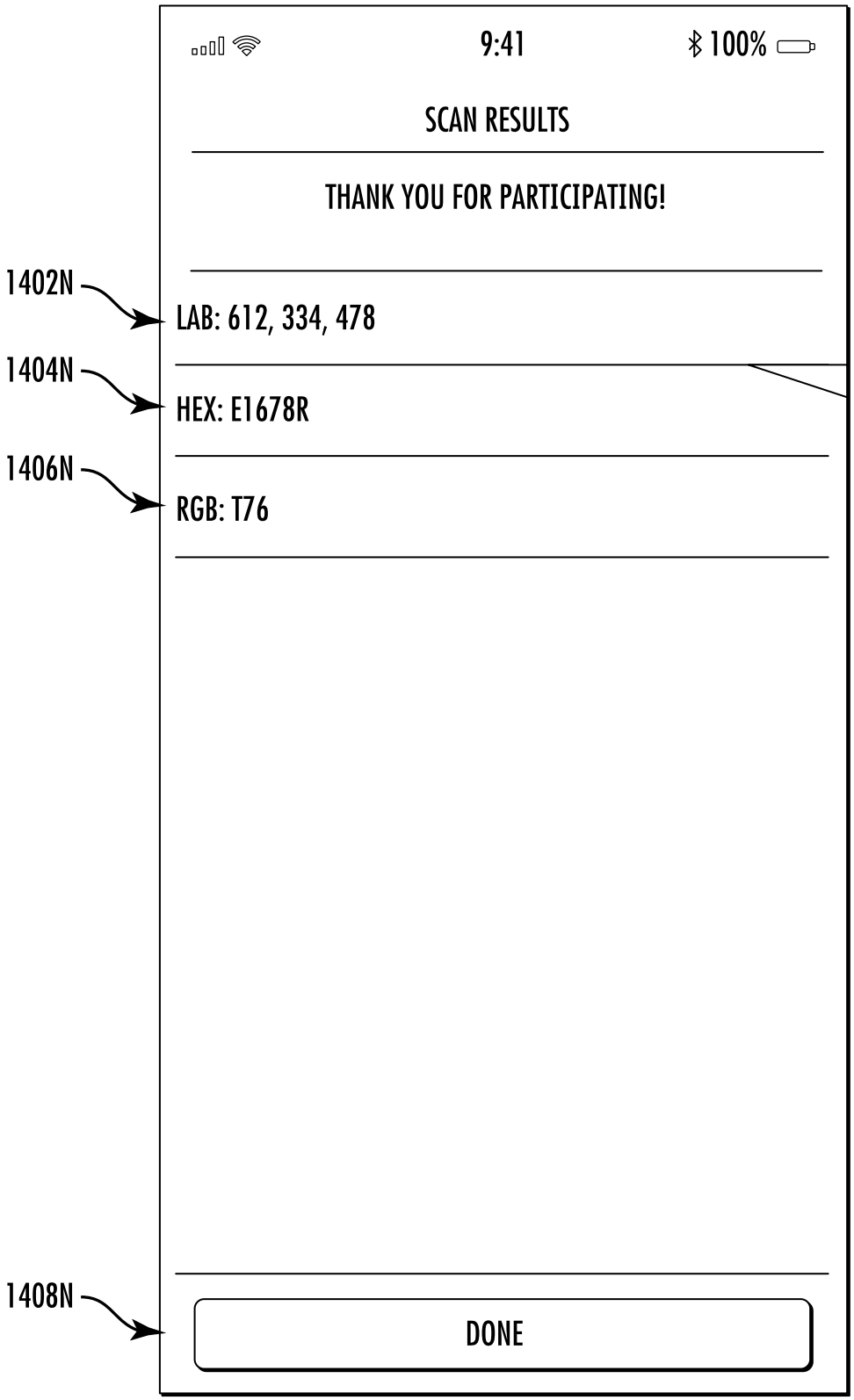
9:41
100%
SCAN RESULTS
THANK YOU FOR PARTICIPATING!
1402N
LAB: 612, 334, 478
1404N
HEX: E1678R
1406N
RGB: T76
1408N
DONE

FIG. 14N

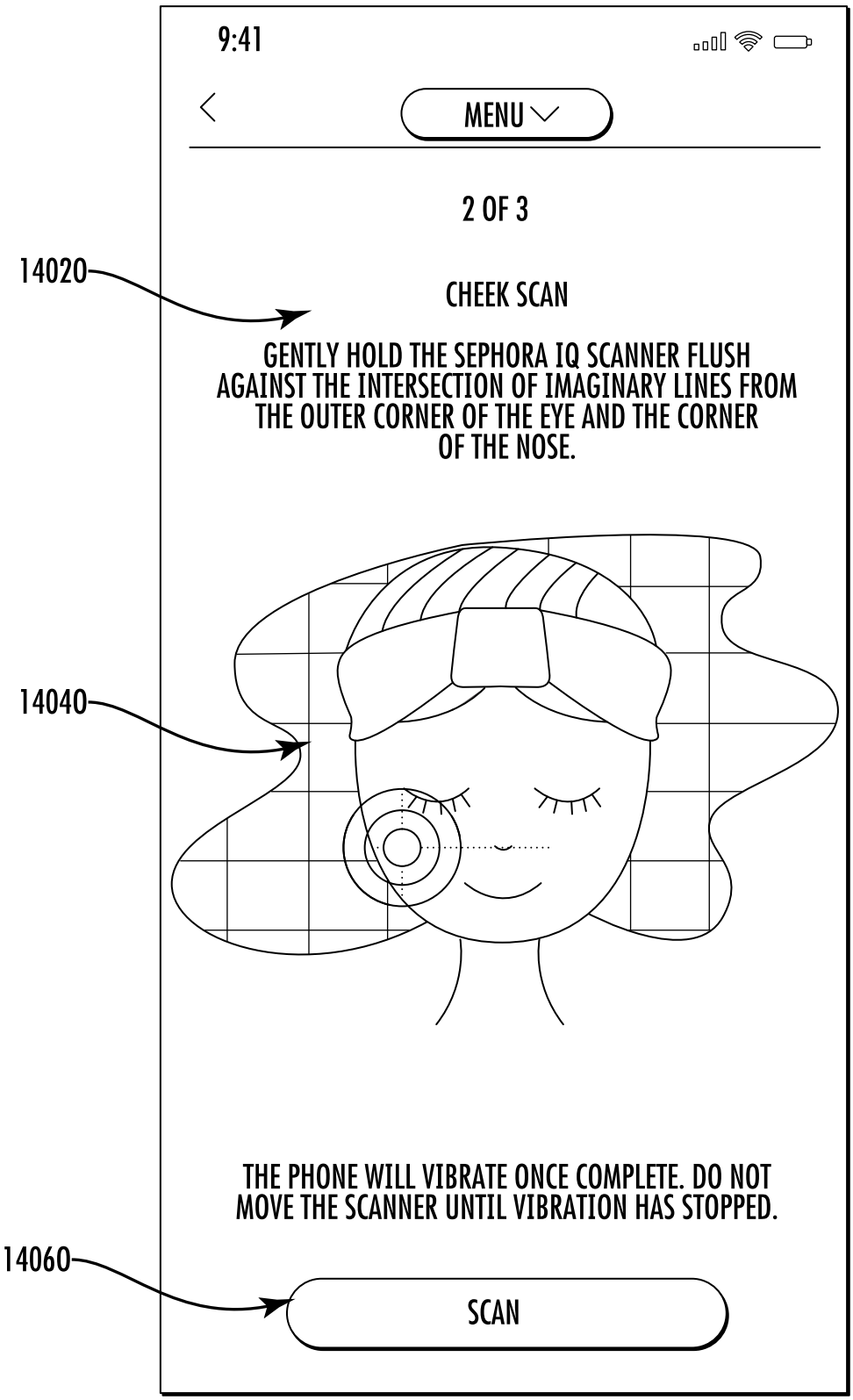
9:41
MENU
2 OF 3
14020
CHEEK SCAN
GENTLY HOLD THE SEPHORA IQ SCANNER FLUSH AGAINST THE INTERSECTION OF IMAGINARY LINES FROM THE OUTER CORNER OF THE EYE AND THE CORNER OF THE NOSE.
14040
THE PHONE WILL VIBRATE ONCE COMPLETE. DO NOT MOVE THE SCANNER UNTIL VIBRATION HAS STOPPED.
14060
SCAN

FIG. 140

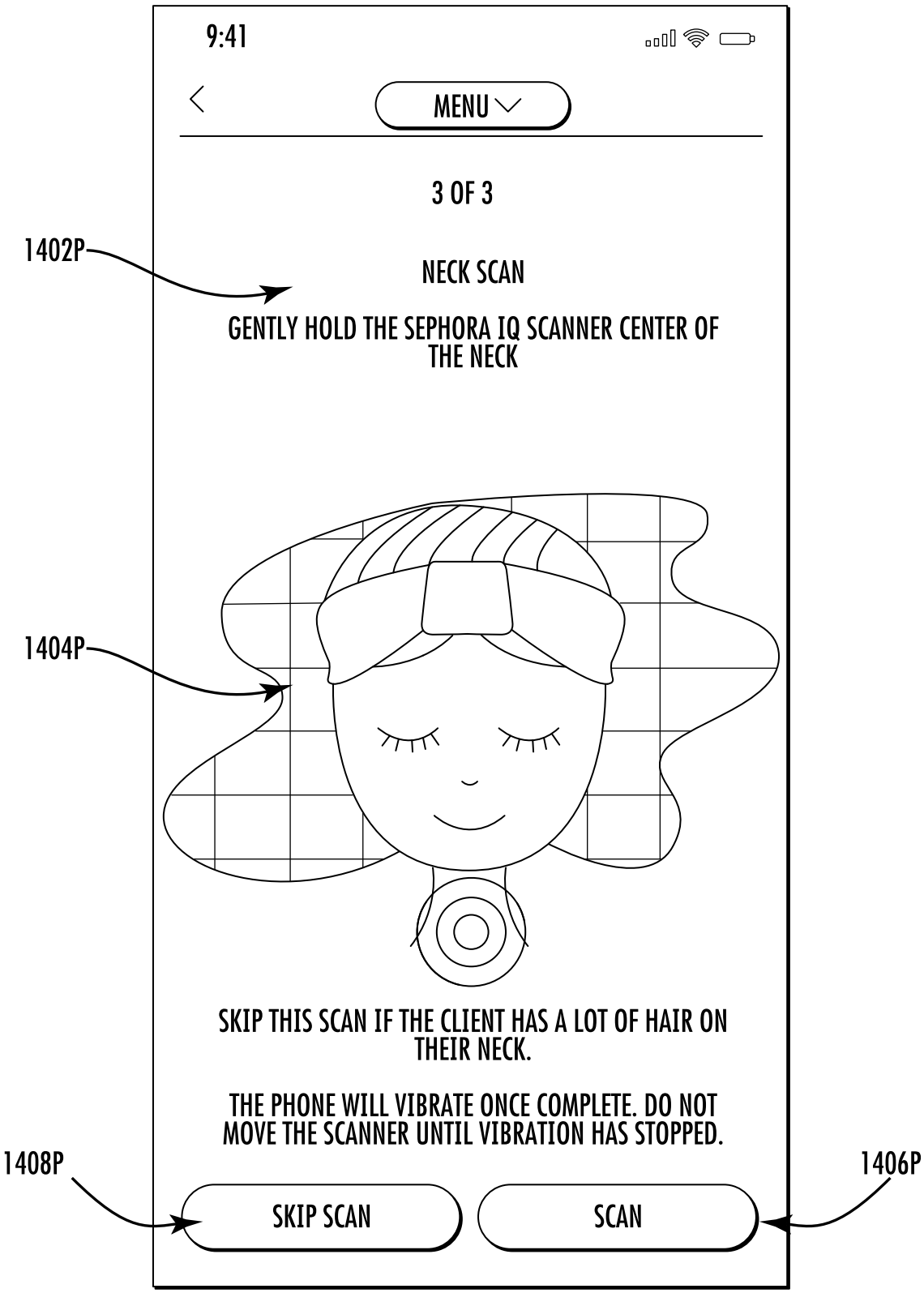
9:41
MENU
3 OF 3
1402P
NECK SCAN
GENTLY HOLD THE SEPHORA IQ SCANNER CENTER OF THE NECK
1404P
SKIP THIS SCAN IF THE CLIENT HAS A LOT OF HAIR ON THEIR NECK.
THE PHONE WILL VIBRATE ONCE COMPLETE. DO NOT MOVE THE SCANNER UNTIL VIBRATION HAS STOPPED.
1408P
1406P
SKIP SCAN
SCAN

FIG. 14P

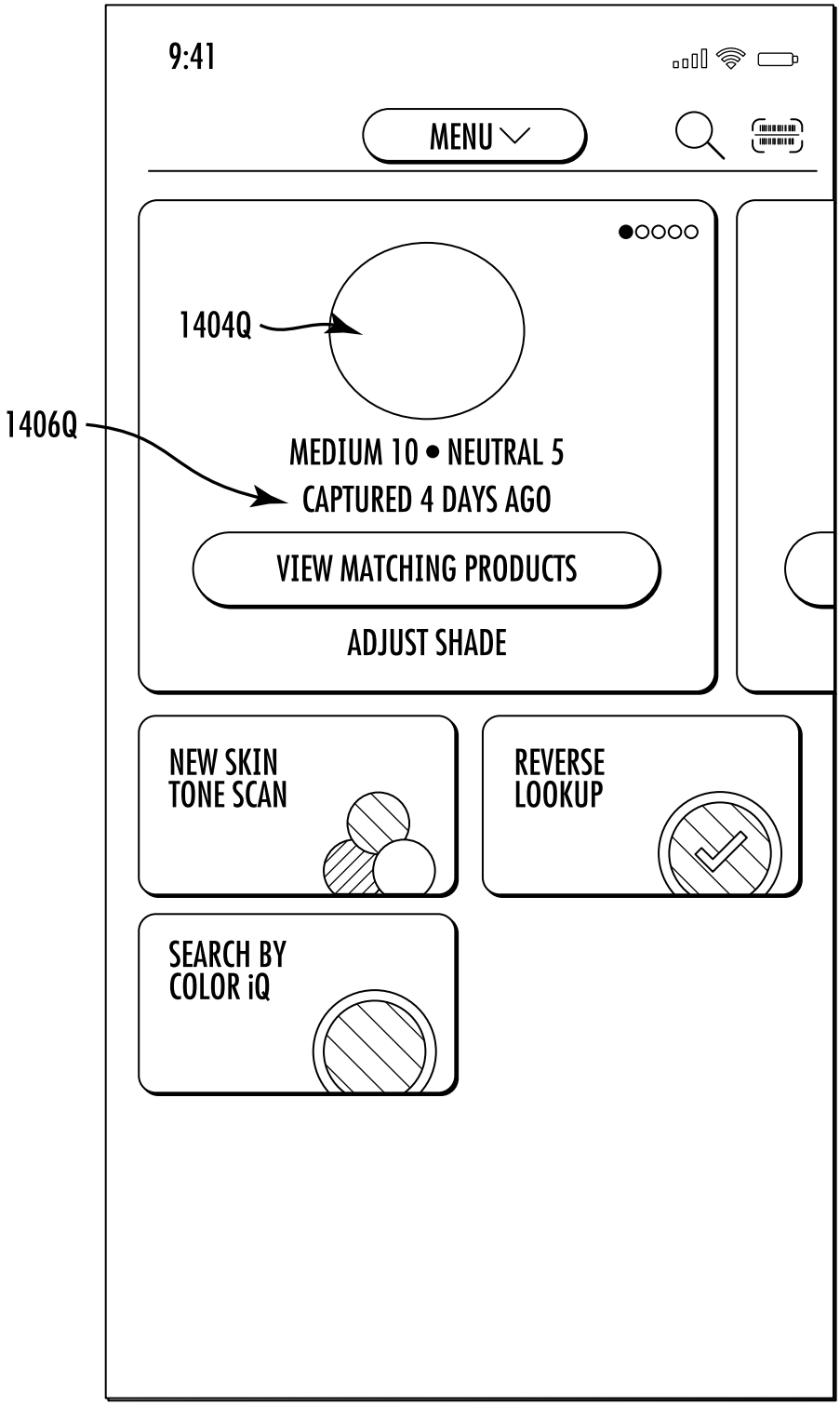
9:41
MENU
1404Q
1406Q
MEDIUM 10 • NEUTRAL 5
CAPTURED 4 DAYS AGO
VIEW MATCHING PRODUCTS
ADJUST SHADE
NEW SKIN TONE SCAN
REVERSE LOOKUP
SEARCH BY COLOR iQ

FIG. 14Q

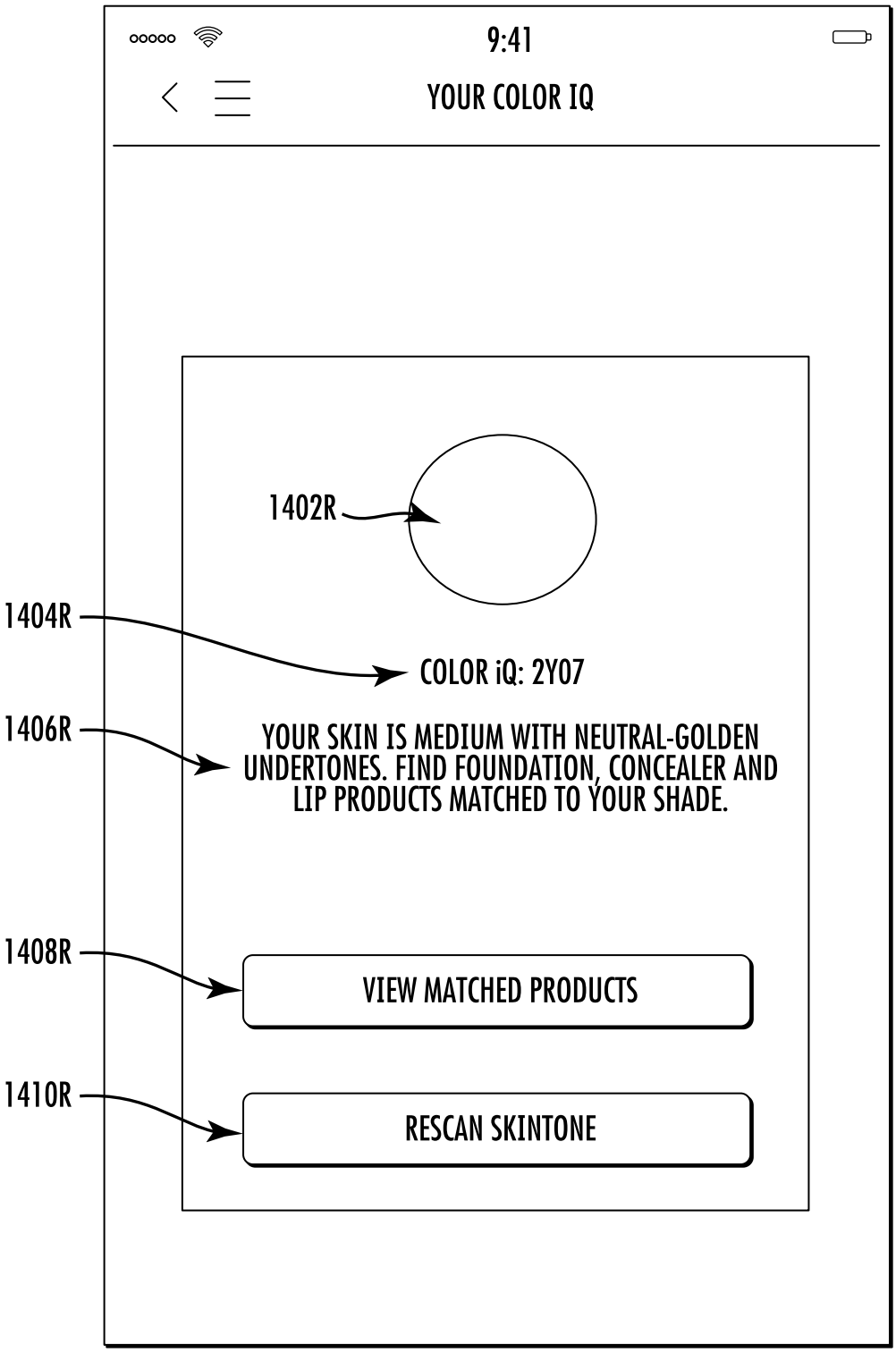
9:41
YOUR COLOR IQ
1402R
1404R
COLOR iQ: 2Y07
1406R
YOUR SKIN IS MEDIUM WITH NEUTRAL-GOLDEN UNDERTONES. FIND FOUNDATION, CONCEALER AND LIP PRODUCTS MATCHED TO YOUR SHADE.
1408R
VIEW MATCHED PRODUCTS
1410R
RESCAN SKINTONE

FIG. 14R

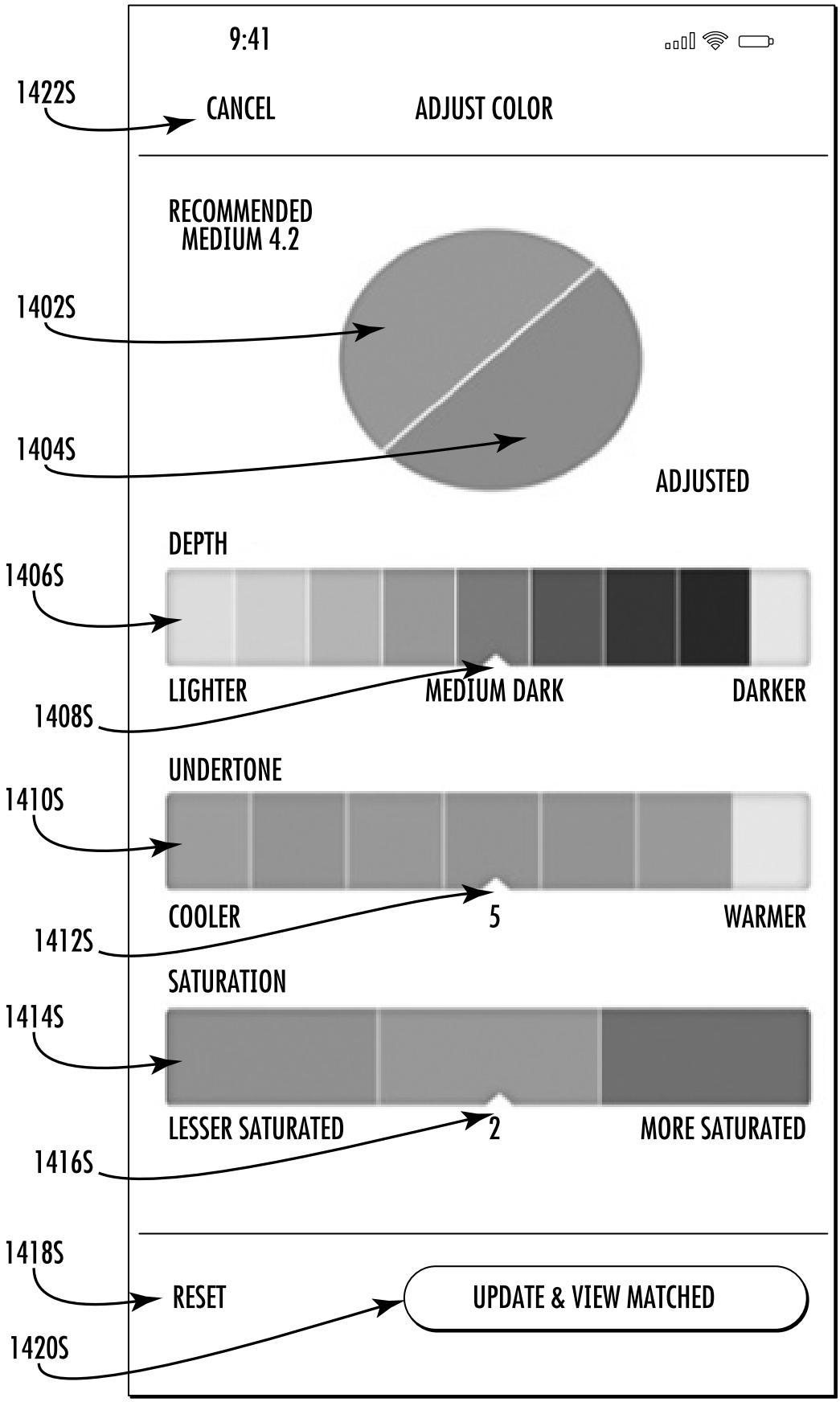
9:41
1422S
CANCEL
ADJUST COLOR
RECOMMENDED
MEDIUM 4.2
1402S
1404S
ADJUSTED
DEPTH
1406S
LIGHTER
MEDIUM DARK
DARKER
1408S
UNDERTONE
1410S
COOLER
5
WARMER
1412S
SATURATION
1414S
LESSER SATURATED
2
MORE SATURATED
1416S
1418S
RESET
UPDATE & VIEW MATCHED
1420S

FIG. 14S

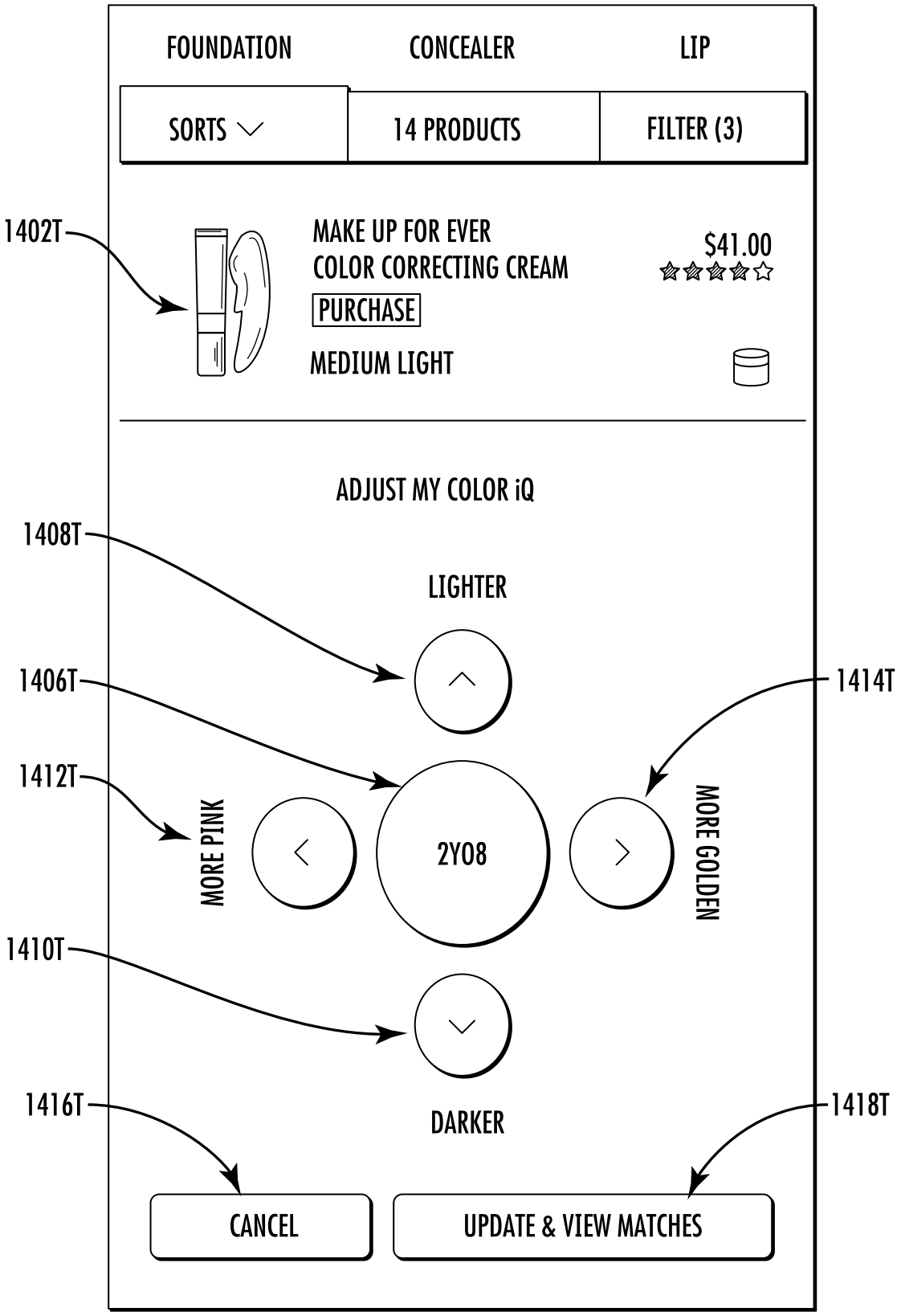
FOUNDATION
CONCEALER
LIP
SORTS
14 PRODUCTS
FILTER (3)
1402T
MAKE UP FOR EVER
COLOR CORRECTING CREAM
$41.00
PURCHASE
MEDIUM LIGHT
ADJUST MY COLOR iQ
1408T
LIGHTER
1406T
1414T
1412T
MORE PINK
2Y08
MORE GOLDEN
1410T
DARKER
1416T
1418T
CANCEL
UPDATE & VIEW MATCHES

FIG. 14T

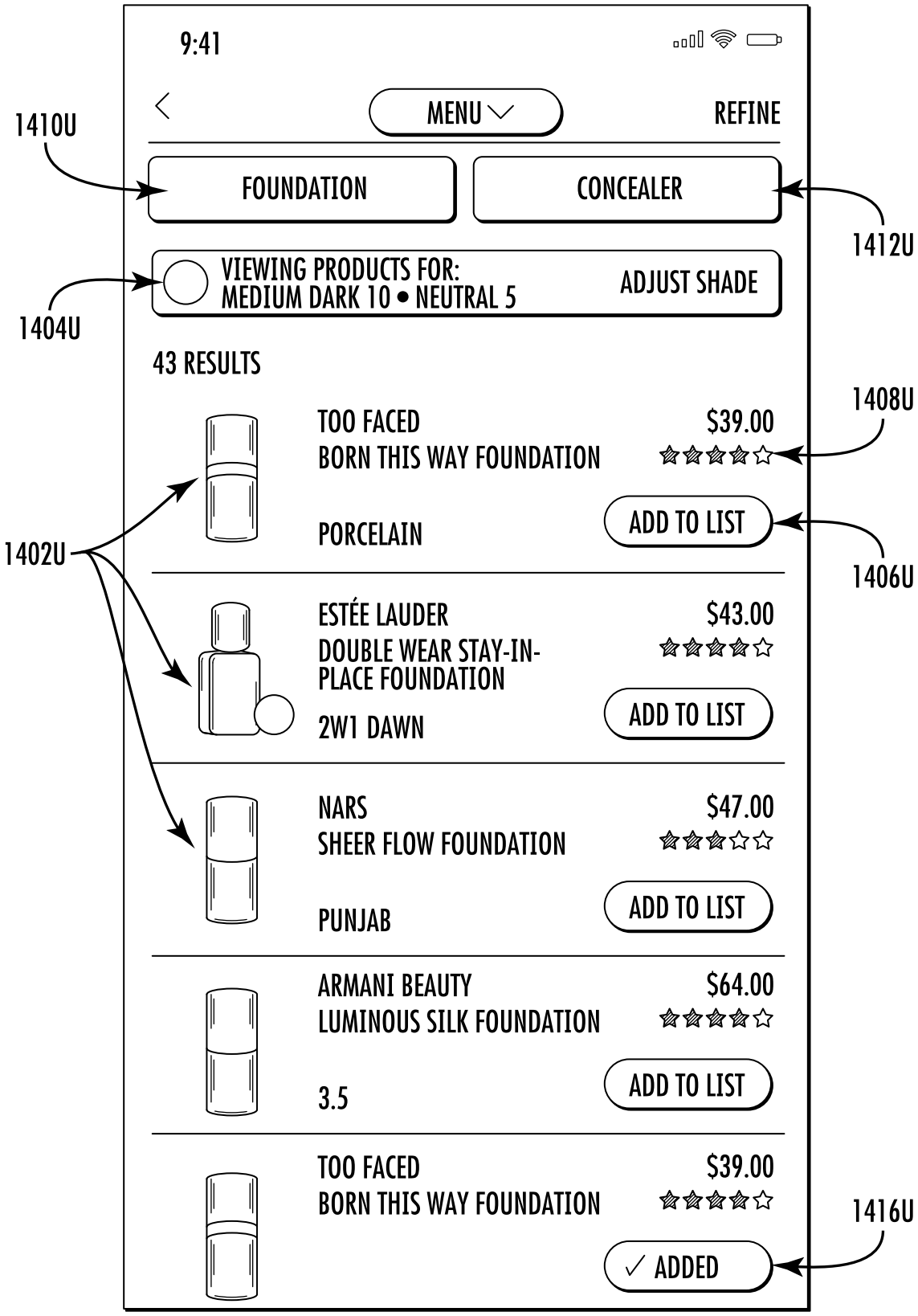
9:41
MENU
REFINE
1410U
FOUNDATION
CONCEALER
1412U
VIEWING PRODUCTS FOR:
MEDIUM DARK 10 • NEUTRAL 5
ADJUST SHADE
1404U
43 RESULTS
1408U
TOO FACED
$39.00
BORN THIS WAY FOUNDATION
PORCELAIN
ADD TO LIST
1402U
1406U
ESTÉE LAUDER
$43.00
DOUBLE WEAR STAY-IN-PLACE FOUNDATION
2W1 DAWN
ADD TO LIST
NARS
$47.00
SHEER FLOW FOUNDATION
PUNJAB
ADD TO LIST
ARMANI BEAUTY
$64.00
LUMINOUS SILK FOUNDATION
3.5
ADD TO LIST
TOO FACED
$39.00
BORN THIS WAY FOUNDATION
1416U
✓ ADDED

FIG. 14U

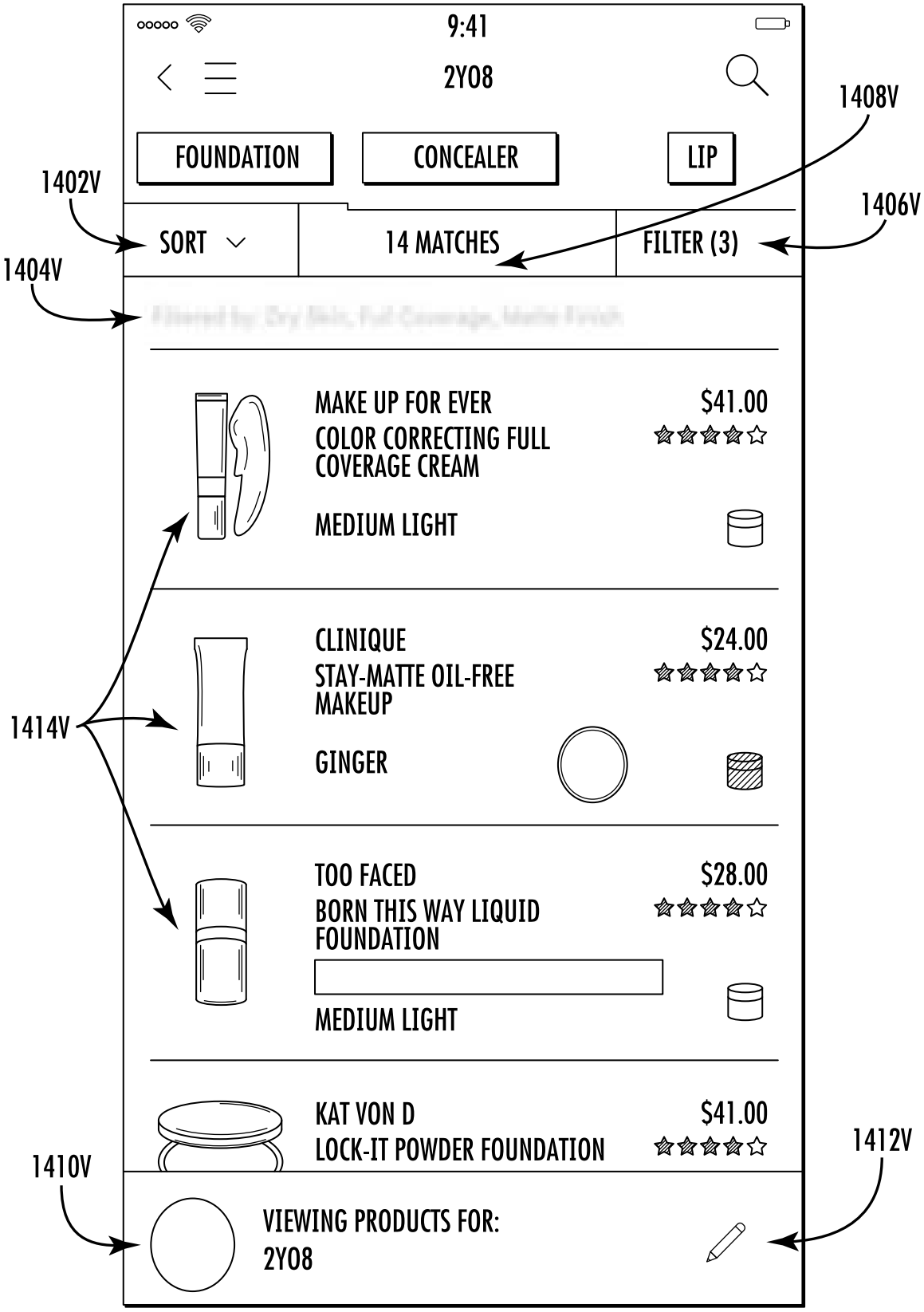
9:41
2Y08
1408V
FOUNDATION
CONCEALER
LIP
1402V
1406V
SORT
14 MATCHES
FILTER (3)
1404V
MAKE UP FOR EVER
$41.00
COLOR CORRECTING FULL COVERAGE CREAM
MEDIUM LIGHT
CLINIQUE
$24.00
STAY-MATTE OIL-FREE MAKEUP
GINGER
1414V
TOO FACED
$28.00
BORN THIS WAY LIQUID FOUNDATION
MEDIUM LIGHT
KAT VON D
$41.00
LOCK-IT POWDER FOUNDATION
1410V
1412V
VIEWING PRODUCTS FOR:
2Y08

FIG. 14V

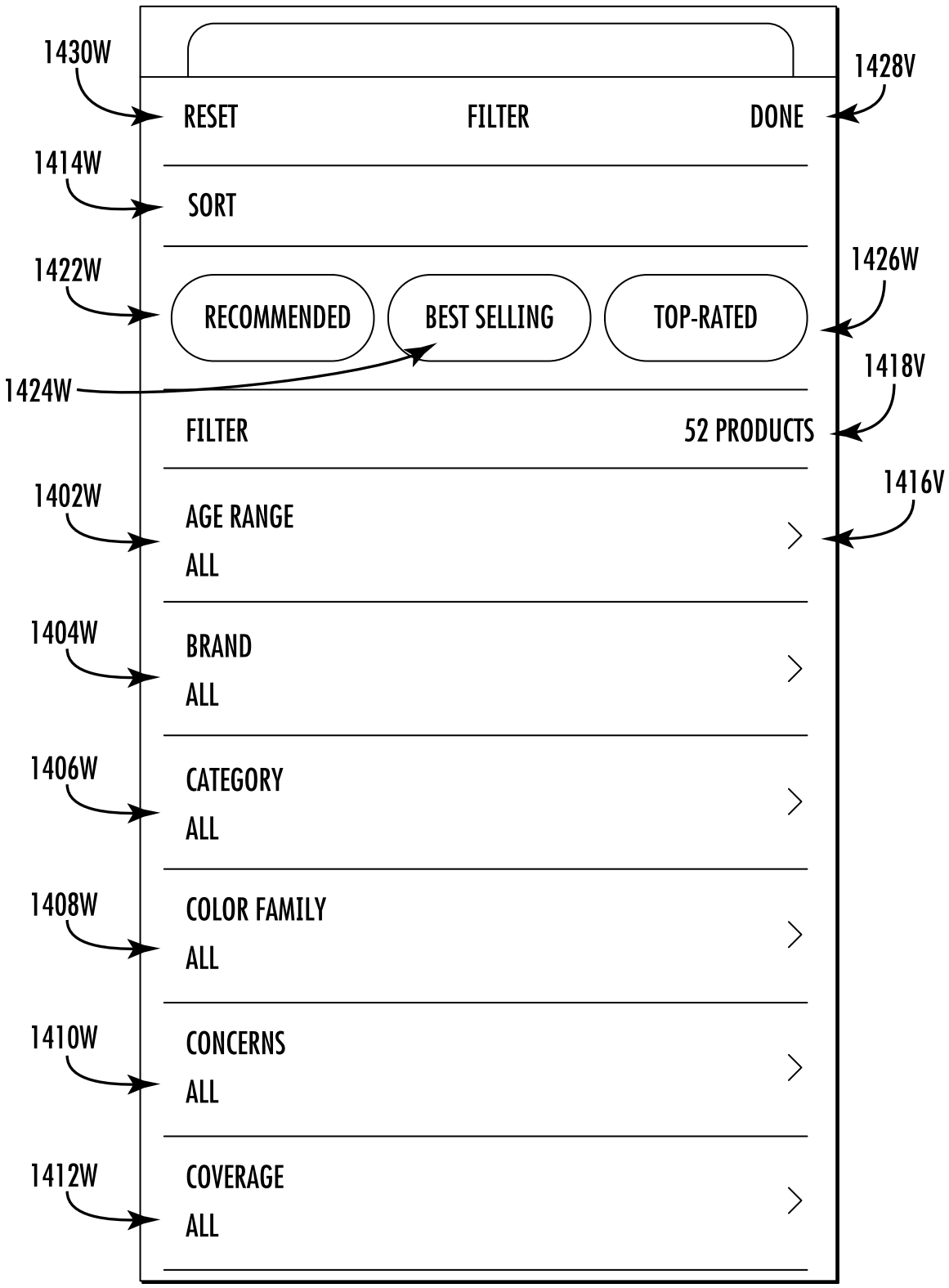
1430W
RESET
FILTER
DONE
1428V
1414W
SORT
1422W
RECOMMENDED
BEST SELLING
TOP-RATED
1426W
1424W
1418V
FILTER
52 PRODUCTS
1402W
AGE RANGE
ALL
1416V
1404W
BRAND
ALL
1406W
CATEGORY
ALL
1408W
COLOR FAMILY
ALL
1410W
CONCERNS
ALL
1412W
COVERAGE
ALL

FIG. 14W

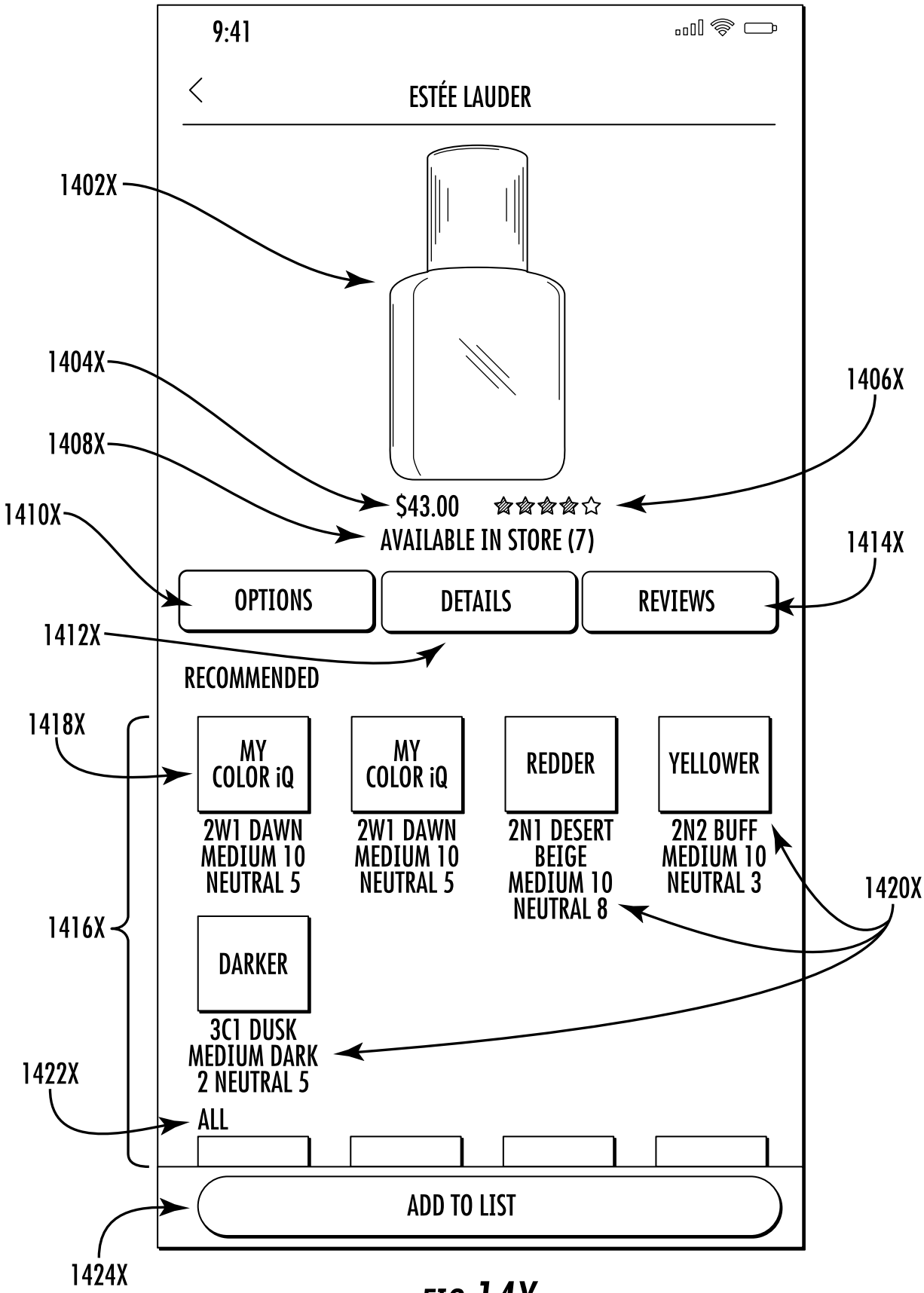
9:41
ESTÉE LAUDER
1402X
1404X
1406X
1408X
$43.00
AVAILABLE IN STORE (7)
1410X
1414X
OPTIONS
DETAILS
REVIEWS
1412X
RECOMMENDED
1418X
MY COLOR iQ
2W1 DAWN MEDIUM 10 NEUTRAL 5
MY COLOR iQ
2W1 DAWN MEDIUM 10 NEUTRAL 5
REDDER
2N1 DESERT BEIGE MEDIUM 10 NEUTRAL 8
YELLOWER
2N2 BUFF MEDIUM 10 NEUTRAL 3
1420X
1416X
DARKER
3C1 DUSK MEDIUM DARK 2 NEUTRAL 5
1422X
ALL
ADD TO LIST
1424X

FIG. 14X

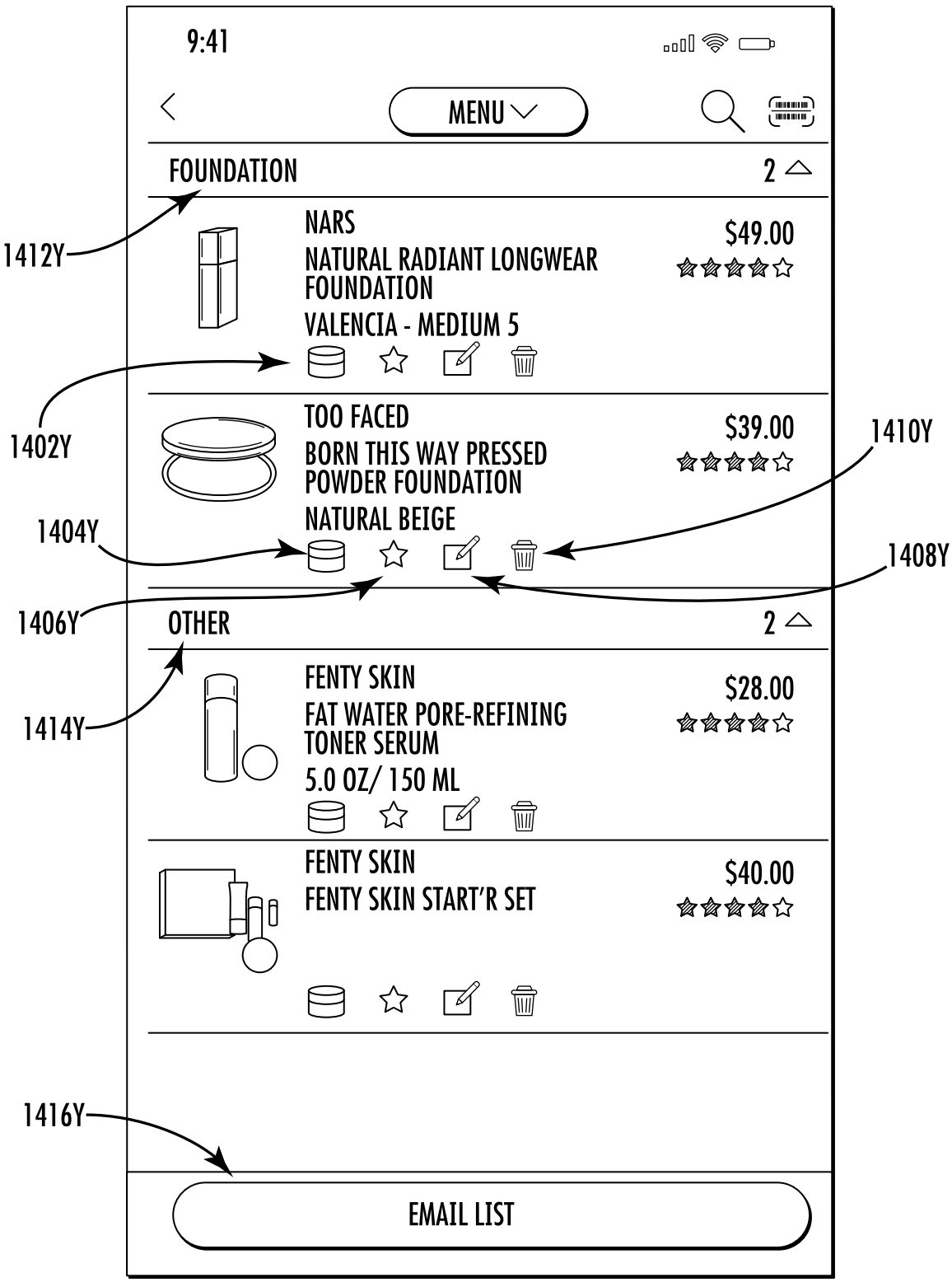
9:41
MENU
FOUNDATION
2
NARS
NATURAL RADIANT LONGWEAR FOUNDATION
VALENCIA - MEDIUM 5
$49.00
TOO FACED
BORN THIS WAY PRESSED POWDER FOUNDATION
NATURAL BEIGE
$39.00
OTHER
2
FENTY SKIN
FAT WATER PORE-REFINING TONER SERUM
5.0 OZ/ 150 ML
$28.00
FENTY SKIN
FENTY SKIN START'R SET
$40.00
EMAIL LIST
1412Y
1402Y
1404Y
1406Y
1414Y
1416Y
1410Y
1408Y

FIG. 14Y

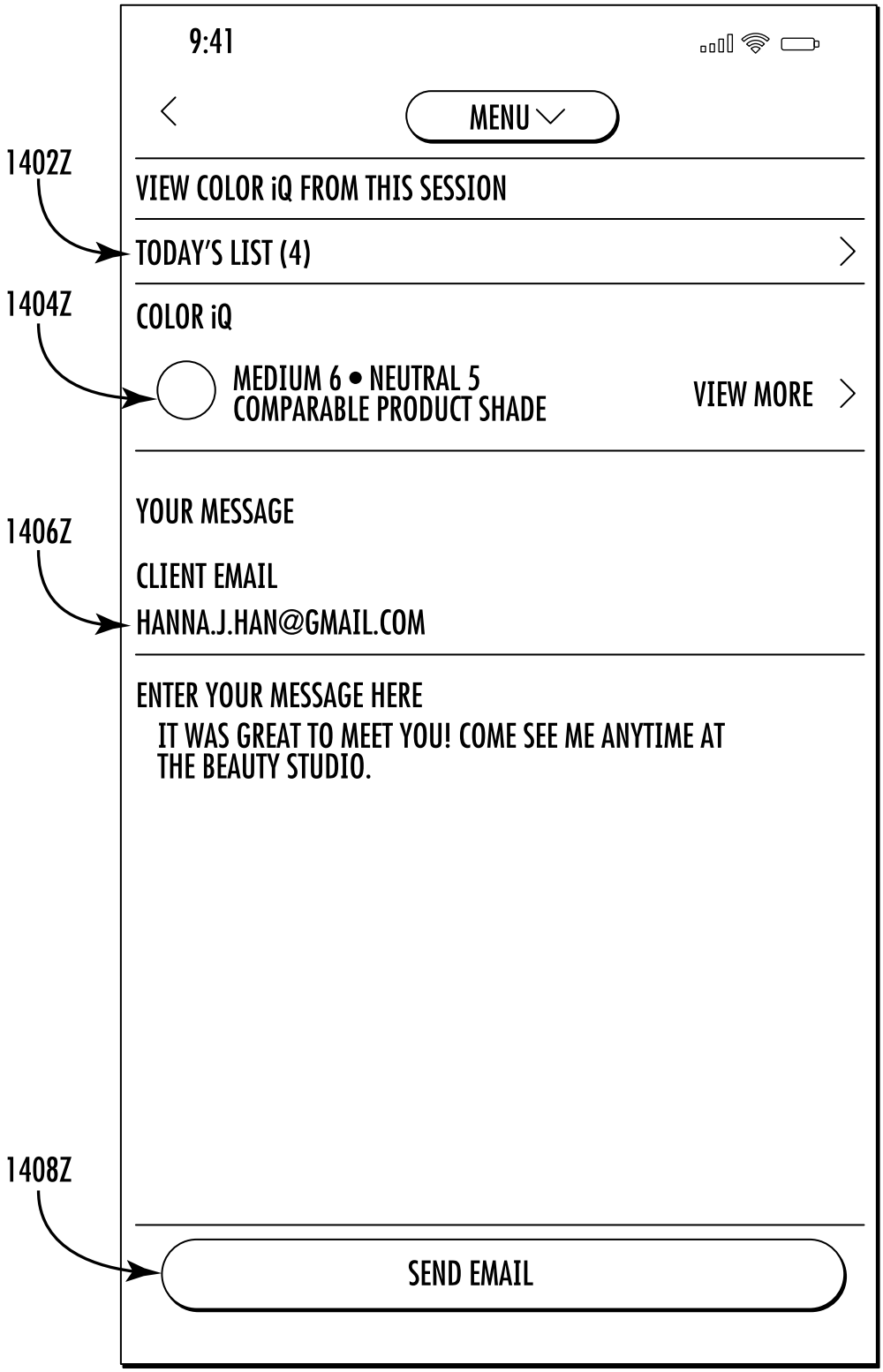
9:41
MENU
1402Z
VIEW COLOR iQ FROM THIS SESSION
TODAY'S LIST (4)
1404Z
COLOR iQ
MEDIUM 6 • NEUTRAL 5
COMPARABLE PRODUCT SHADE
VIEW MORE
YOUR MESSAGE
1406Z
CLIENT EMAIL
HANNA.J.HAN@GMAIL.COM
ENTER YOUR MESSAGE HERE
IT WAS GREAT TO MEET YOU! COME SEE ME ANYTIME AT THE BEAUTY STUDIO.
1408Z
SEND EMAIL

FIG. 14Z

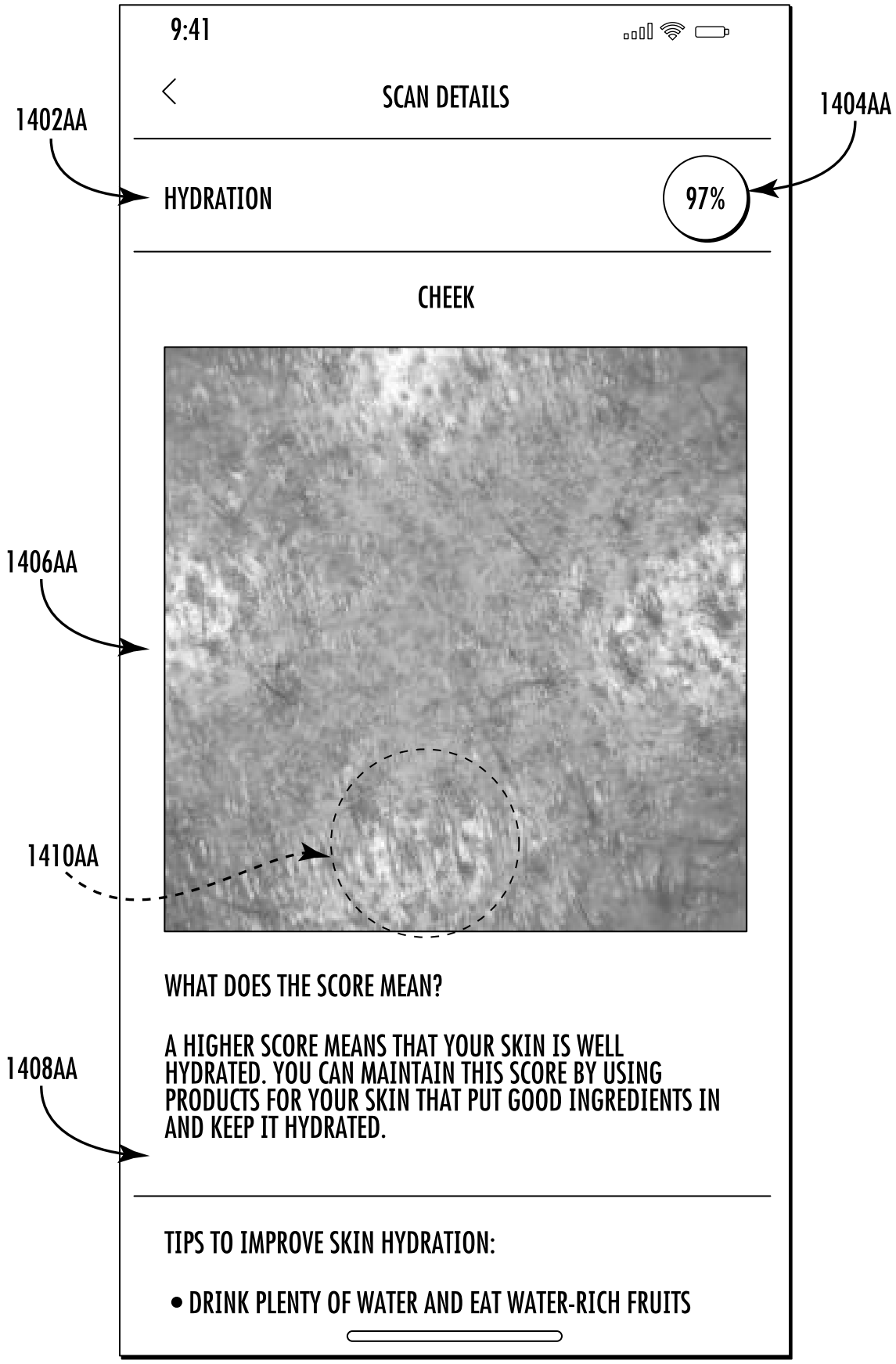
9:41
SCAN DETAILS
1402AA
1404AA
HYDRATION
97%
CHEEK
1406AA
1410AA
WHAT DOES THE SCORE MEAN?
A HIGHER SCORE MEANS THAT YOUR SKIN IS WELL HYDRATED. YOU CAN MAINTAIN THIS SCORE BY USING PRODUCTS FOR YOUR SKIN THAT PUT GOOD INGREDIENTS IN AND KEEP IT HYDRATED.
1408AA
TIPS TO IMPROVE SKIN HYDRATION:
• DRINK PLENTY OF WATER AND EAT WATER-RICH FRUITS

FIG. 14AA

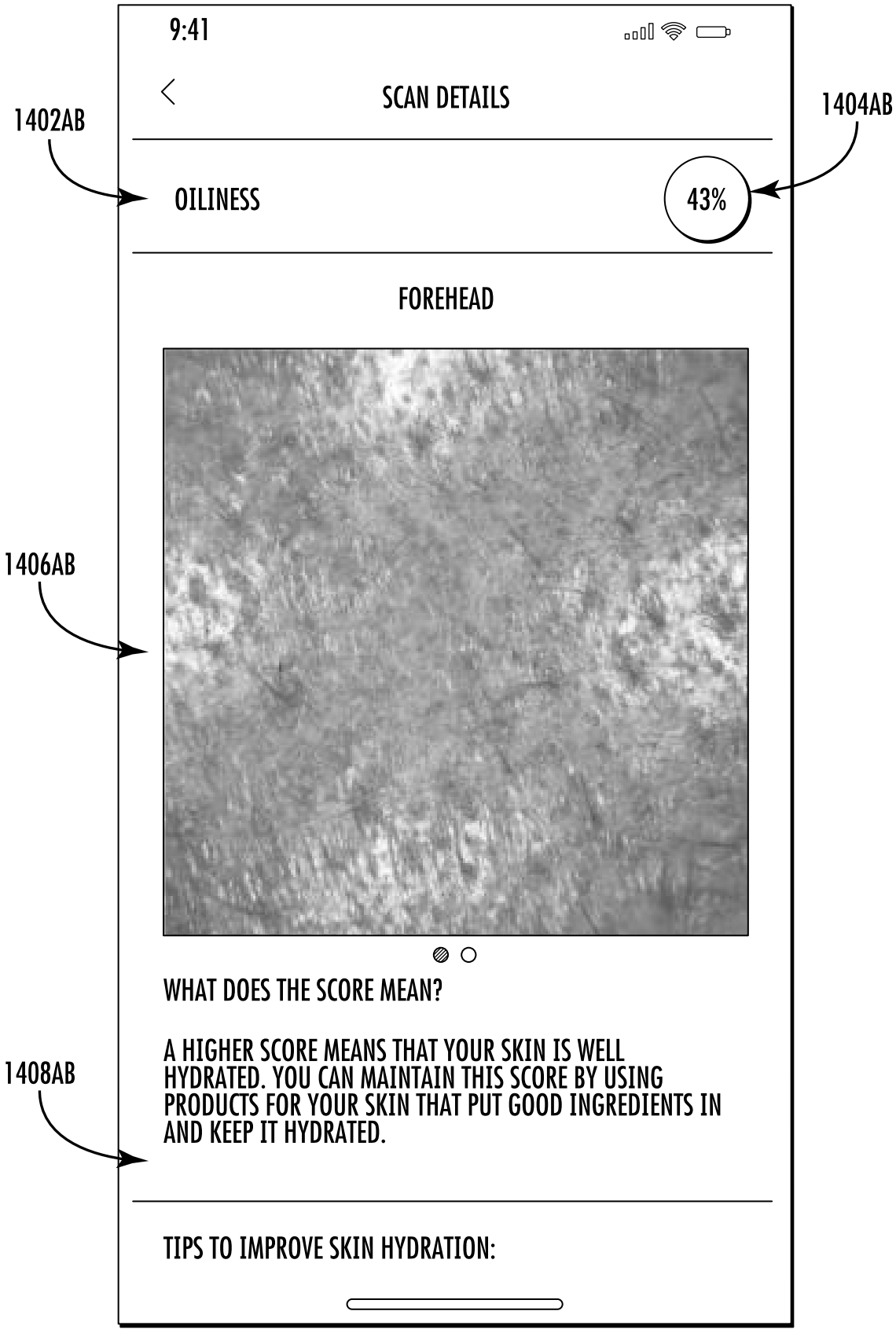
9:41
SCAN DETAILS
1402AB
1404AB
OILINESS
43%
FOREHEAD
1406AB
WHAT DOES THE SCORE MEAN?
1408AB
A HIGHER SCORE MEANS THAT YOUR SKIN IS WELL HYDRATED. YOU CAN MAINTAIN THIS SCORE BY USING PRODUCTS FOR YOUR SKIN THAT PUT GOOD INGREDIENTS IN AND KEEP IT HYDRATED.
TIPS TO IMPROVE SKIN HYDRATION:

FIG. 14AB

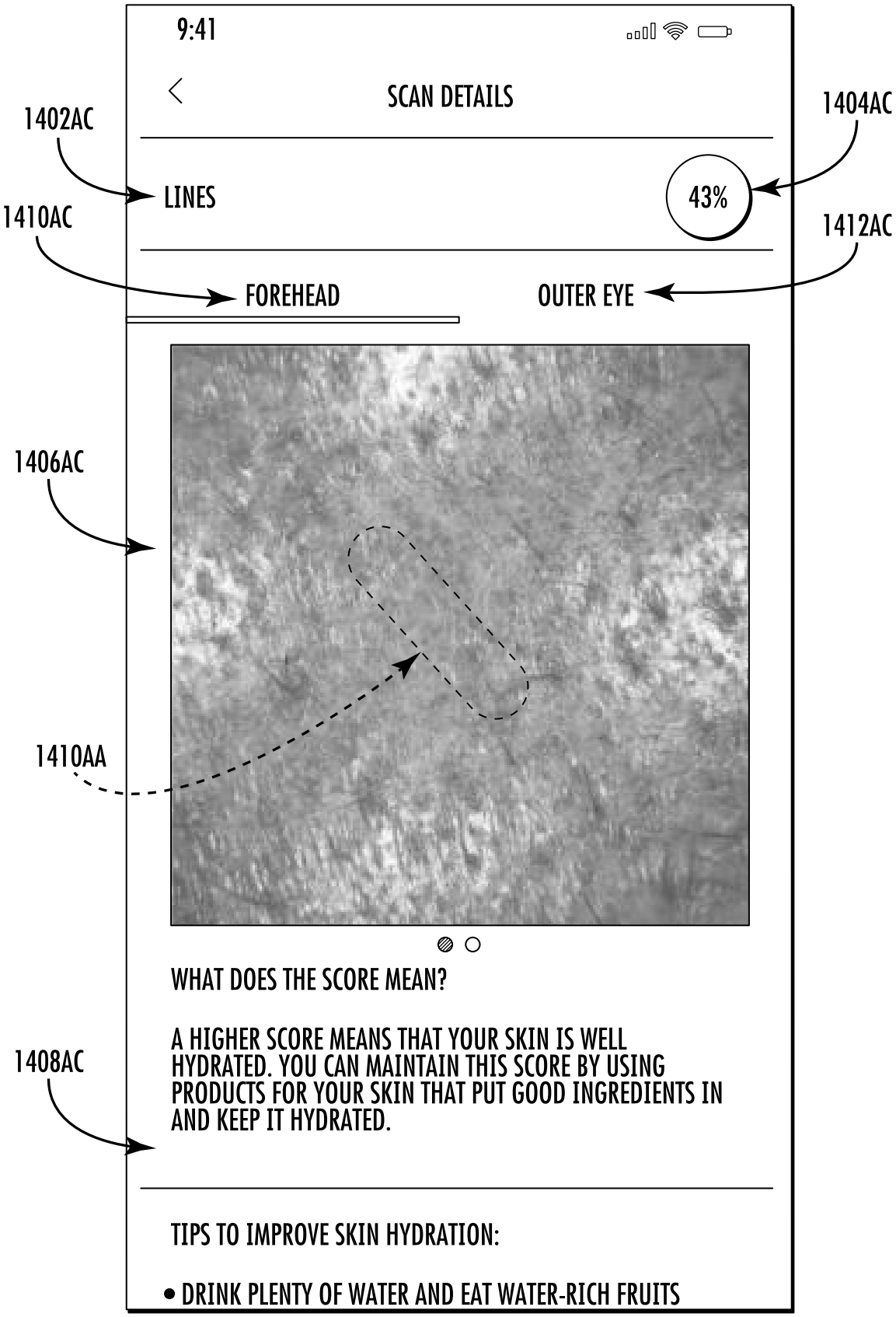
9:41
SCAN DETAILS
1402AC
1404AC
LINES
43%
1410AC
1412AC
FOREHEAD
OUTER EYE
1406AC
1410AA
WHAT DOES THE SCORE MEAN?
1408AC
A HIGHER SCORE MEANS THAT YOUR SKIN IS WELL HYDRATED. YOU CAN MAINTAIN THIS SCORE BY USING PRODUCTS FOR YOUR SKIN THAT PUT GOOD INGREDIENTS IN AND KEEP IT HYDRATED.
TIPS TO IMPROVE SKIN HYDRATION:
• DRINK PLENTY OF WATER AND EAT WATER-RICH FRUITS

FIG. 14AC

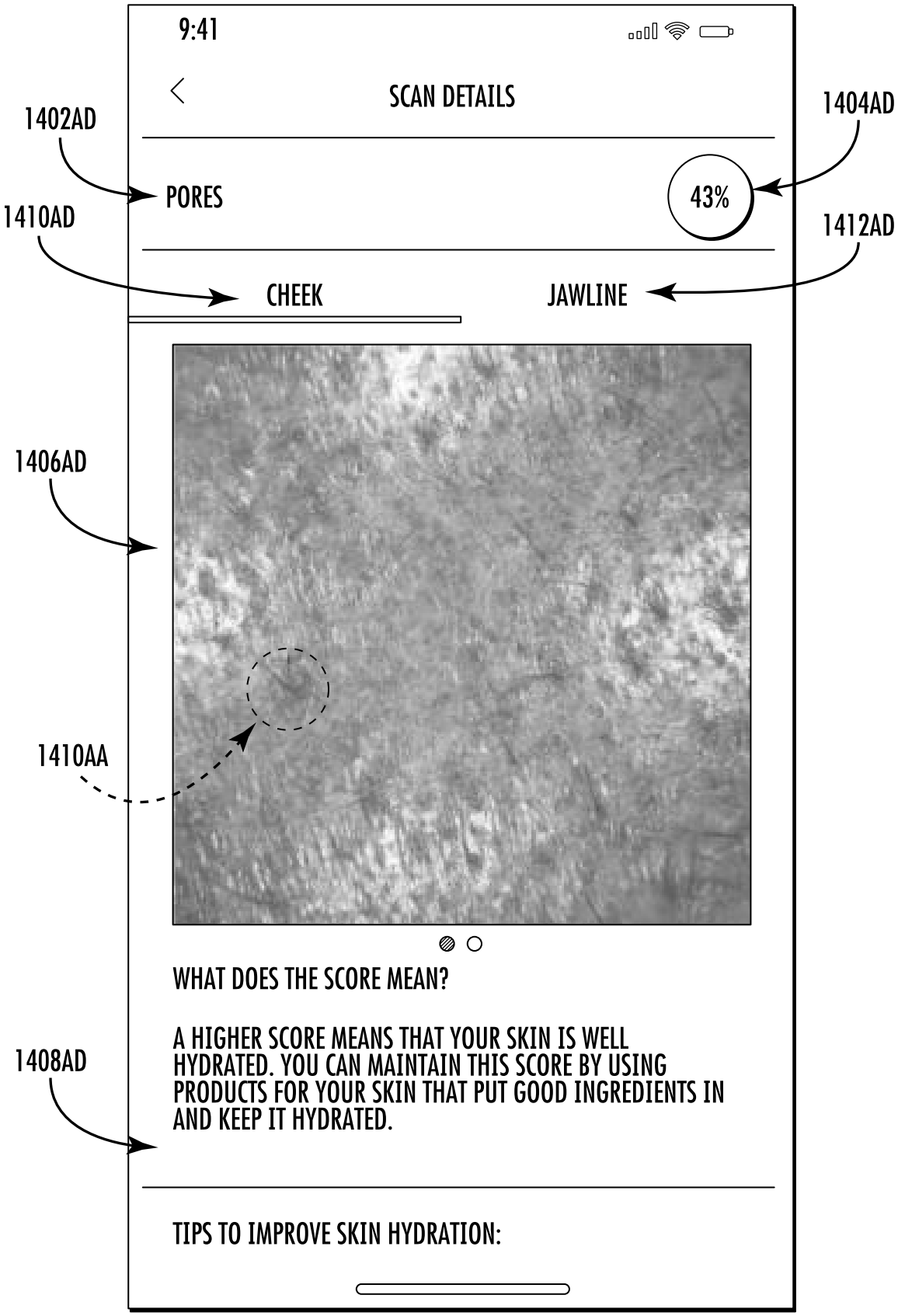
9:41
SCAN DETAILS
1402AD
1404AD
PORES
43%
1410AD
1412AD
CHEEK
JAWLINE
1406AD
1410AA
WHAT DOES THE SCORE MEAN?
A HIGHER SCORE MEANS THAT YOUR SKIN IS WELL HYDRATED. YOU CAN MAINTAIN THIS SCORE BY USING PRODUCTS FOR YOUR SKIN THAT PUT GOOD INGREDIENTS IN AND KEEP IT HYDRATED.
1408AD
TIPS TO IMPROVE SKIN HYDRATION:

FIG. 14AD

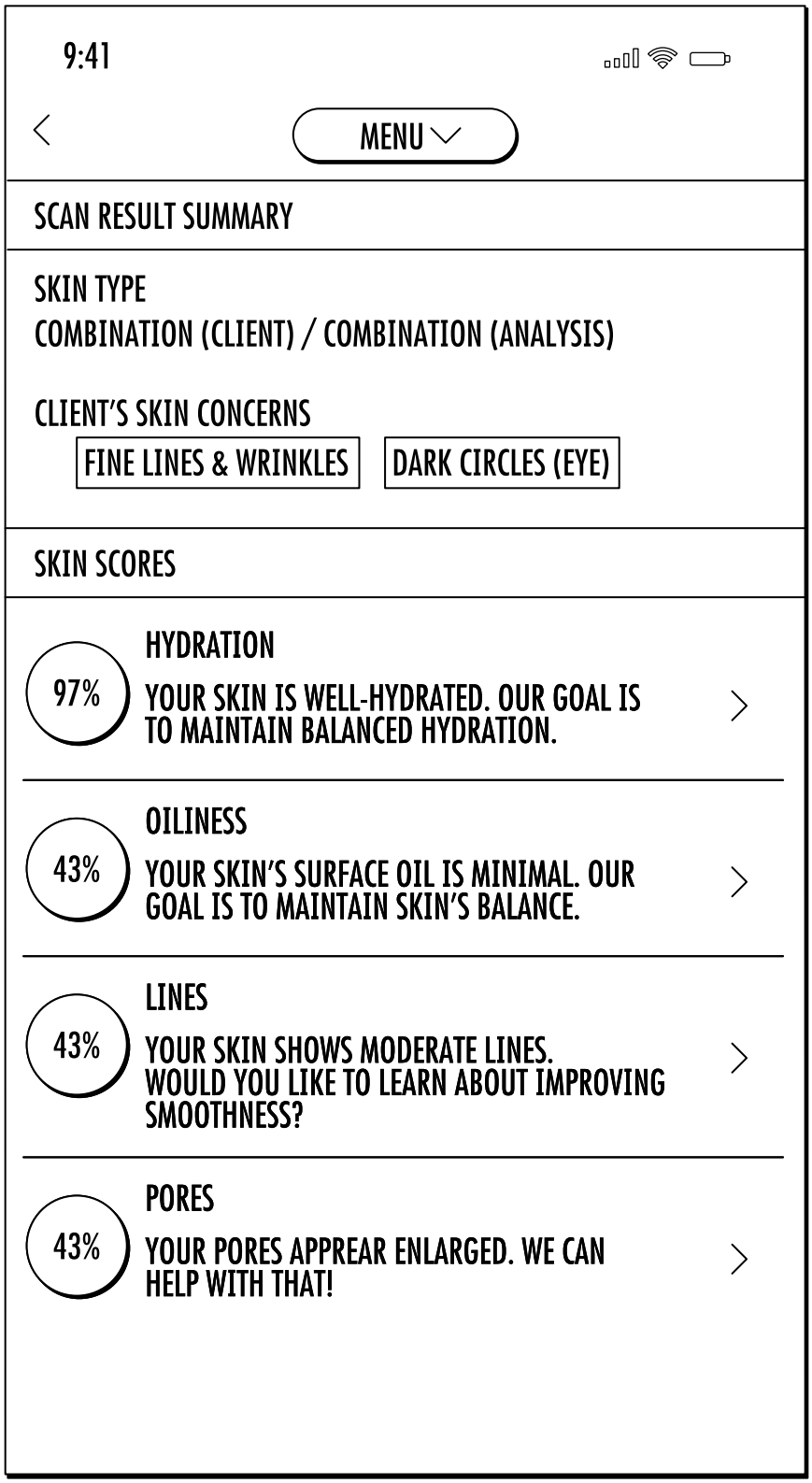
9:41
MENU
SCAN RESULT SUMMARY
SKIN TYPE
COMBINATION (CLIENT) / COMBINATION (ANALYSIS)
CLIENT'S SKIN CONCERNS
FINE LINES & WRINKLES
DARK CIRCLES (EYE)
SKIN SCORES
97%
HYDRATION
YOUR SKIN IS WELL-HYDRATED. OUR GOAL IS TO MAINTAIN BALANCED HYDRATION.
43%
OILINESS
YOUR SKIN'S SURFACE OIL IS MINIMAL. OUR GOAL IS TO MAINTAIN SKIN'S BALANCE.
43%
LINES
YOUR SKIN SHOWS MODERATE LINES. WOULD YOU LIKE TO LEARN ABOUT IMPROVING SMOOTHNESS?
43%
PORES
YOUR PORES APPREAR ENLARGED. WE CAN HELP WITH THAT!

FIG. 14AE

EMAIL SUBJECT
THANKS FOR VISITING US

SEPHORA

MAKEUP SKINCARE FRAGRANCE GIFTS

THANK YOU, [CLIENTNAME]
WE HOPE YOU LOVED YOUR SERVICE. COME BACK SOON!

A MESSAGE FROM HANNA

IT WAS GREAT TO MEET YOU! COME SEE ME ANYTIME AT THE BEAUTY STUDIO.

YOUR SKIN RESULT
YOUR SKIN TYPE IS [SKIN TYPE]

97%

HYDRATION

YOUR SKIN IS WELL-HYDRATED. OUR GOAL IS TO MAINTAIN BALANCED HYDRATION.

43%

OILINESS

YOUR SKIN'S SURFACE OIL IS MINIMAL. OUR GOAL IS TO MAINTAIN SKIN'S BALANCE.

43%

LINES

YOUR SKIN SHOWS MODERATE LINES. WOULD YOU LIKE TO LEARN ABOUT IMPROVING SMOOTHNESS?

43%

PORES

YOUR PORES APPREAR ENLARGED. WE CAN HELP WITH THAT!

YOUR COLOR iQ
WE'VE SAVED THIS INFO TO YOUR BEAUTY INSIDER PROFILE

FIG. 14AF

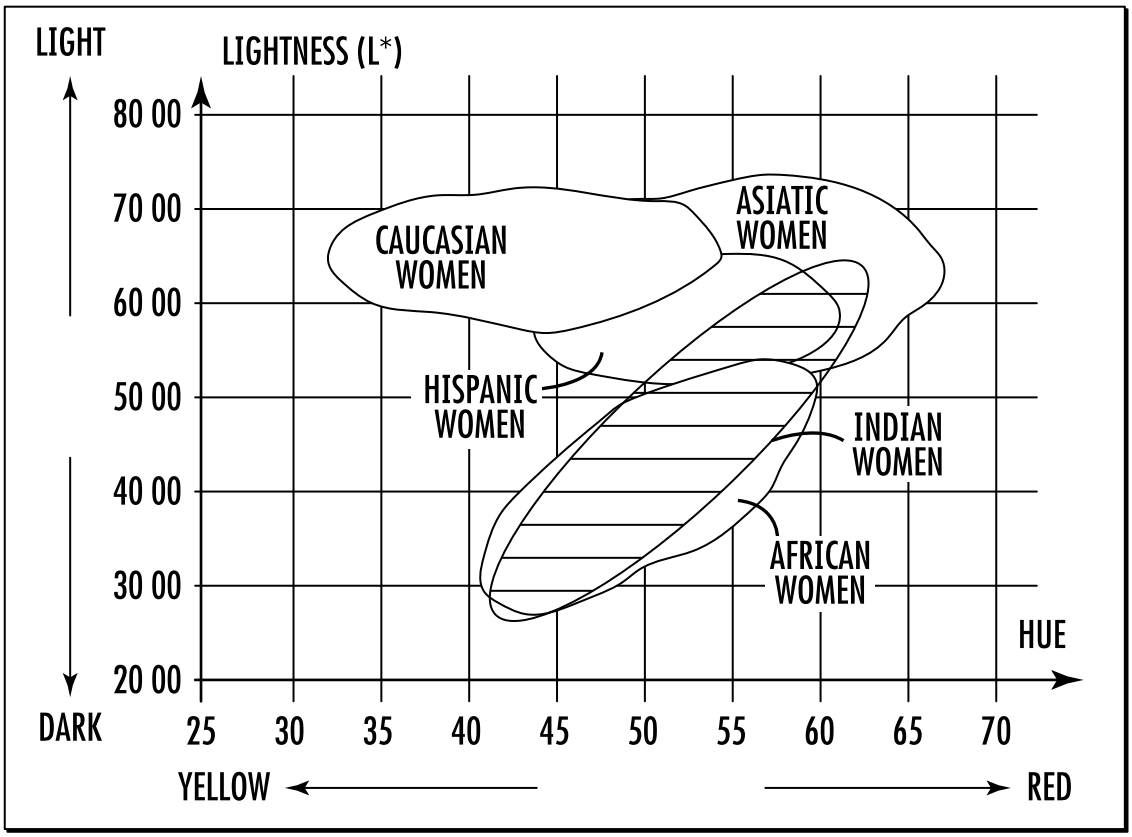
LIGHT
LIGHTNESS (L*)
80 00
70 00
60 00
50 00
40 00
30 00
20 00
DARK
CAUCASIAN WOMEN
ASIATIC WOMEN
HISPANIC WOMEN
INDIAN WOMEN
AFRICAN WOMEN
HUE
25
30
35
40
45
50
55
60
65
70
YELLOW
RED

FIG. 15A

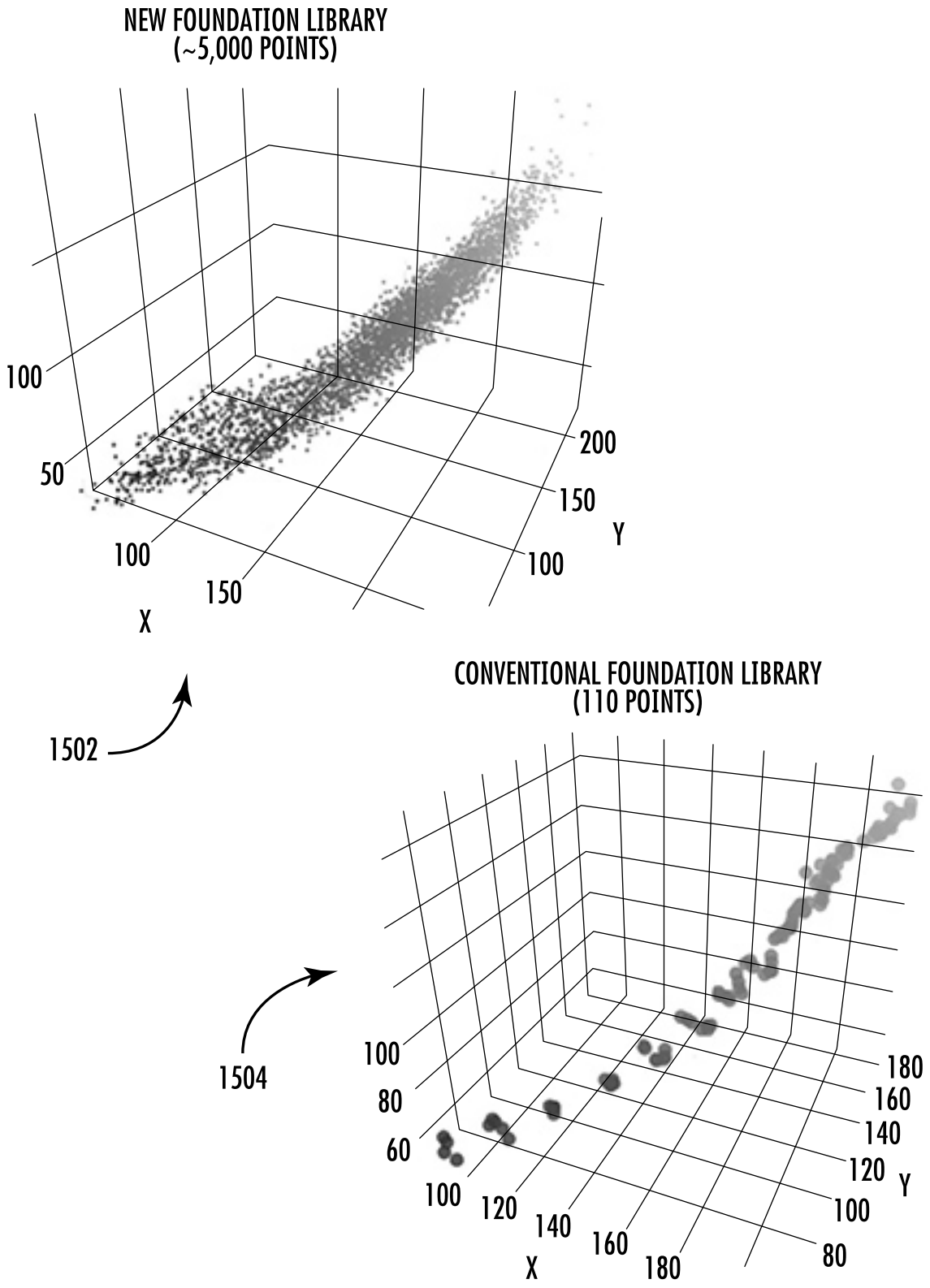
NEW FOUNDATION LIBRARY
(~5,000 POINTS)
100
50
100
150
X
200
150
Y
100
1502
CONVENTIONAL FOUNDATION LIBRARY
(110 POINTS)
1504
100
80
60
100
120
140
160
180
X
180
160
140
120
Y
100
80

FIG. 15B

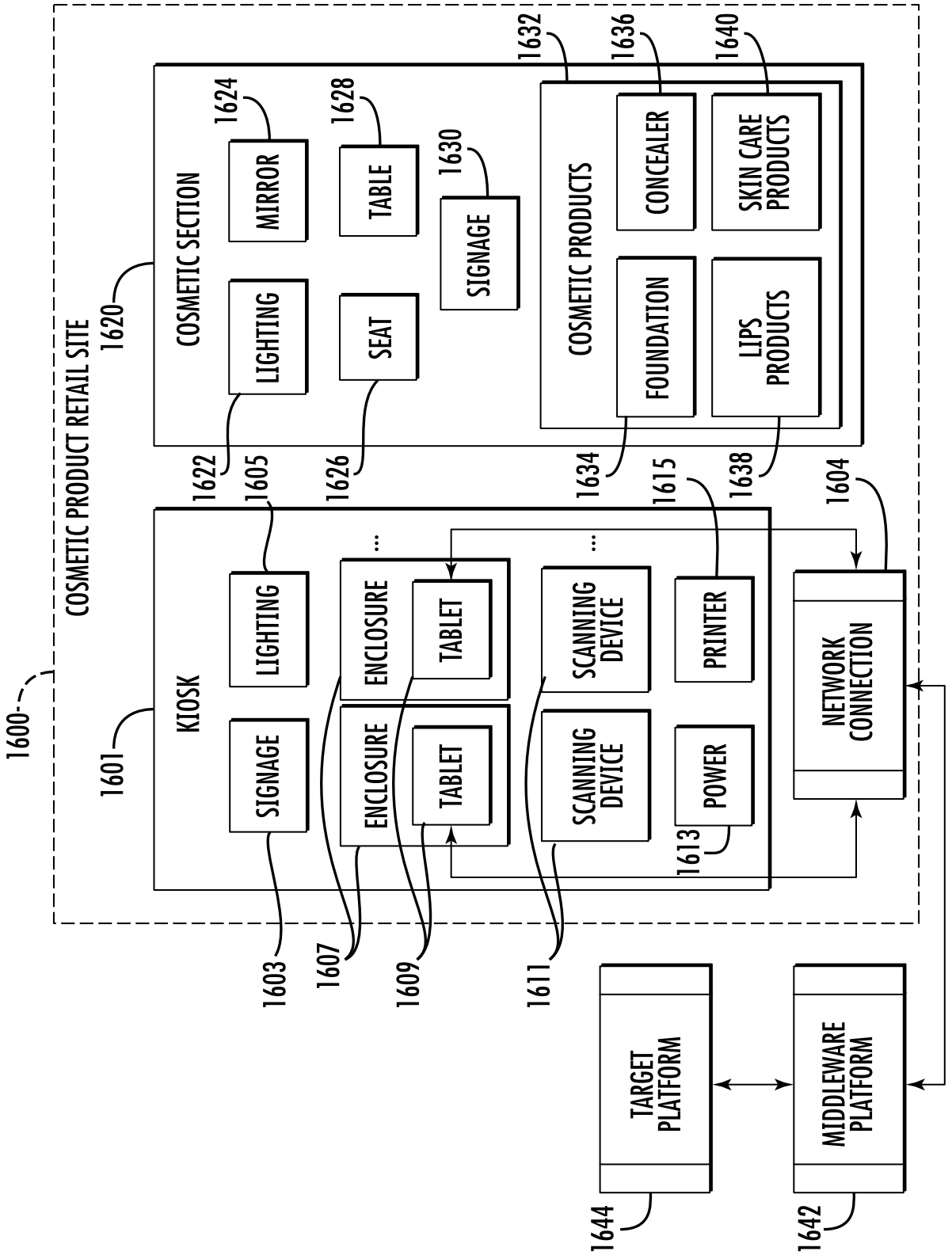
1600
COSMETIC PRODUCT RETAIL SITE
1601
KIOSK
1603
SIGNAGE
1605
LIGHTING
1607
ENCLOSURE
1609
TABLET
1611
SCANNING DEVICE
1613
POWER
1615
PRINTER
1604
NETWORK CONNECTION
1620
COSMETIC SECTION
1622
LIGHTING
1624
MIRROR
1626
SEAT
1628
TABLE
1630
SIGNAGE
1632
COSMETIC PRODUCTS
1634
FOUNDATION
1636
CONCEALER
1638
LIPS PRODUCTS
1640
SKIN CARE PRODUCTS
1642
MIDDLEWARE PLATFORM
1644
TARGET PLATFORM

FIG. 16A

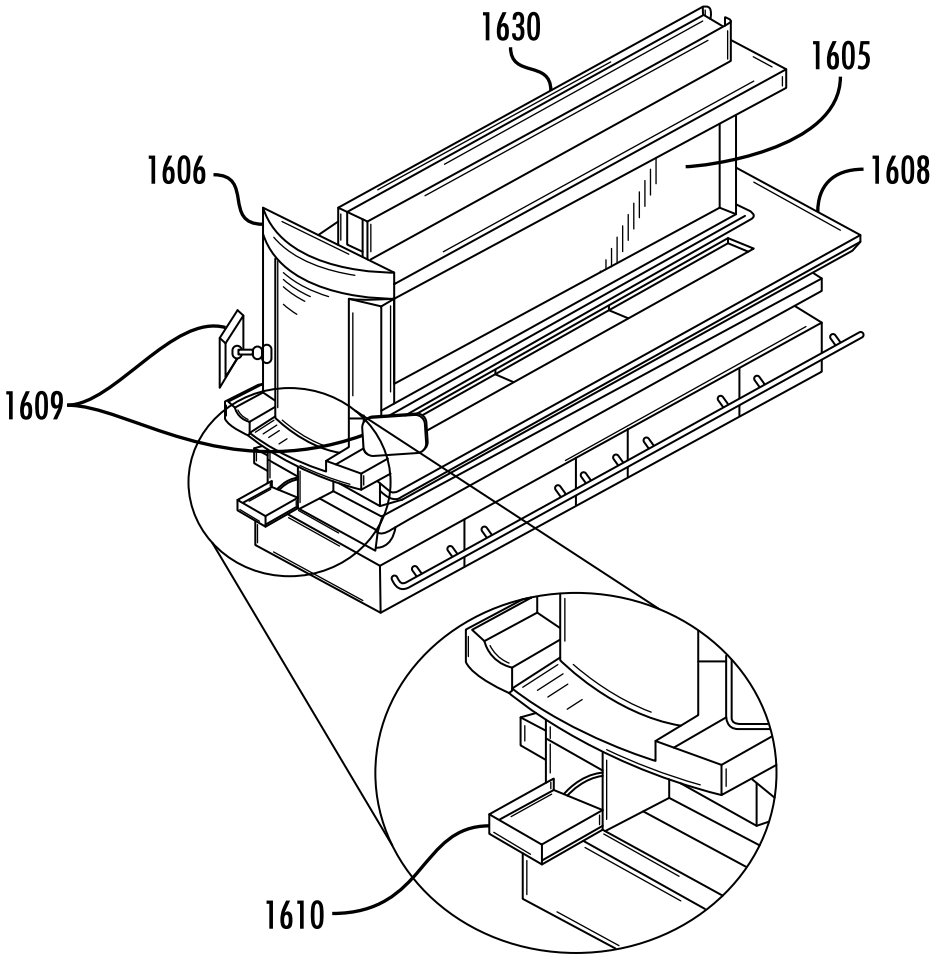

FIG. 16B

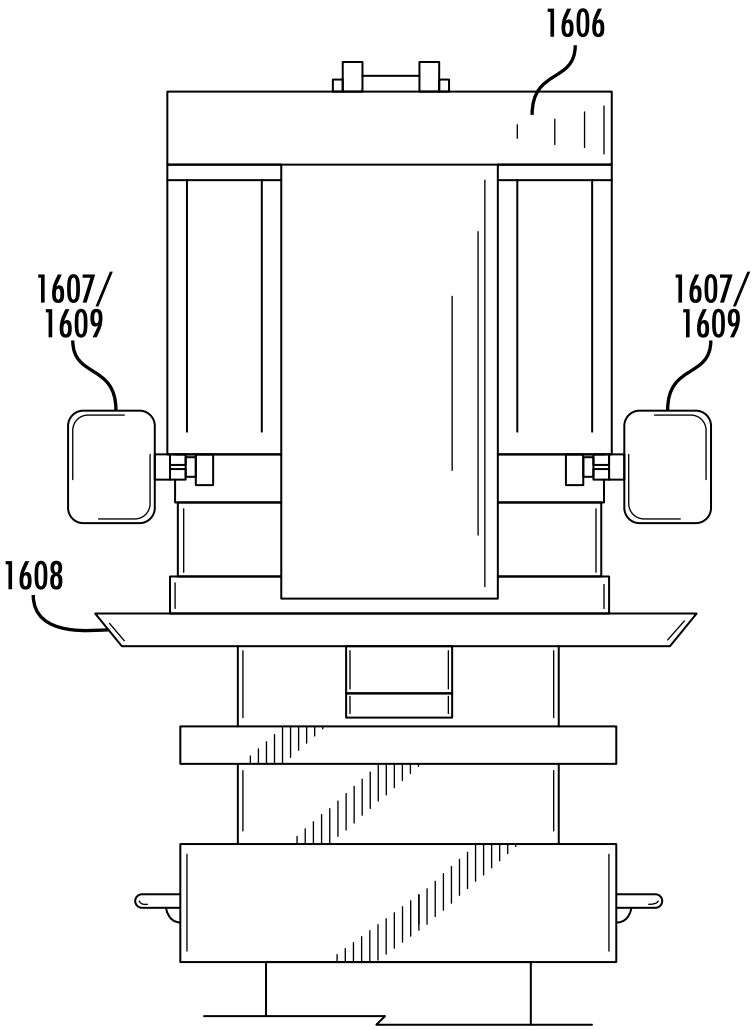

FIG. 16C

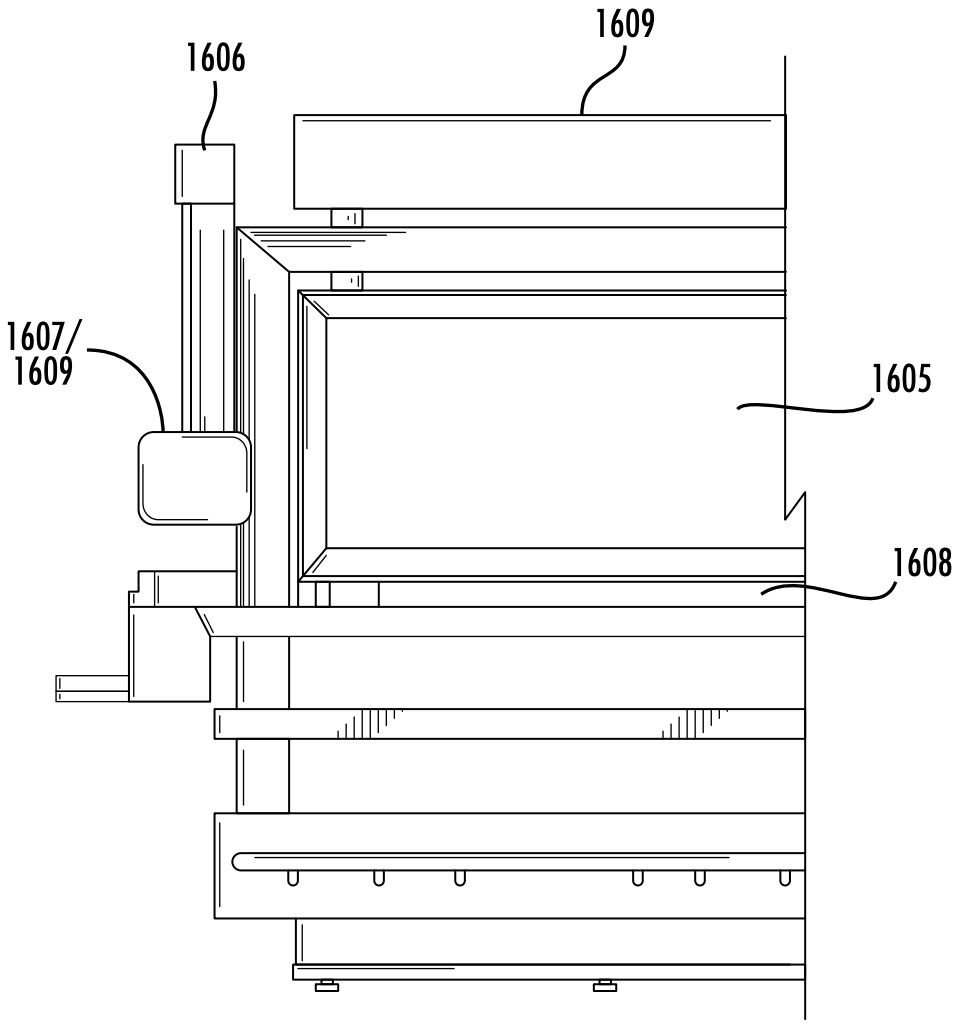

FIG. 16D

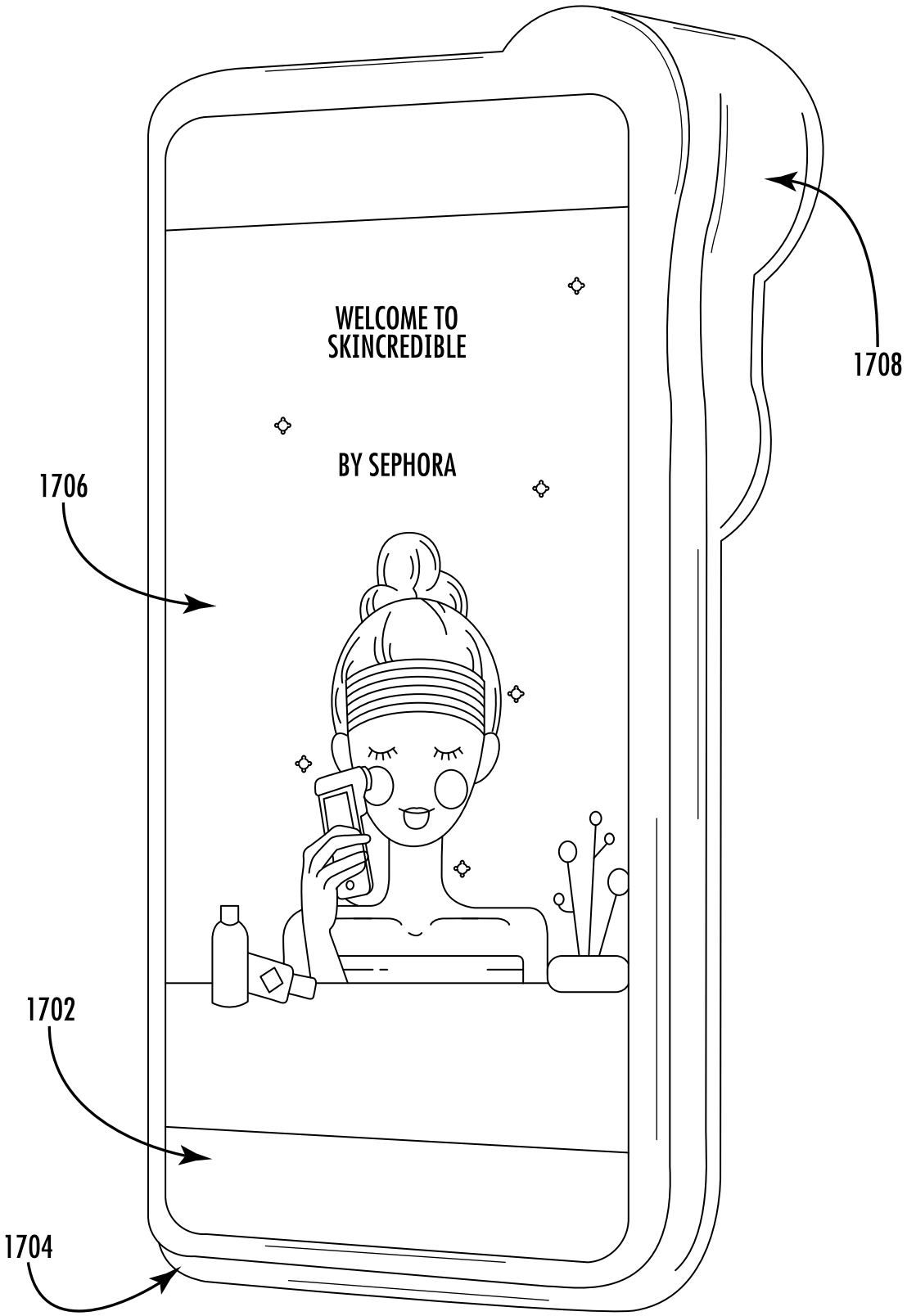

FIG. 17A

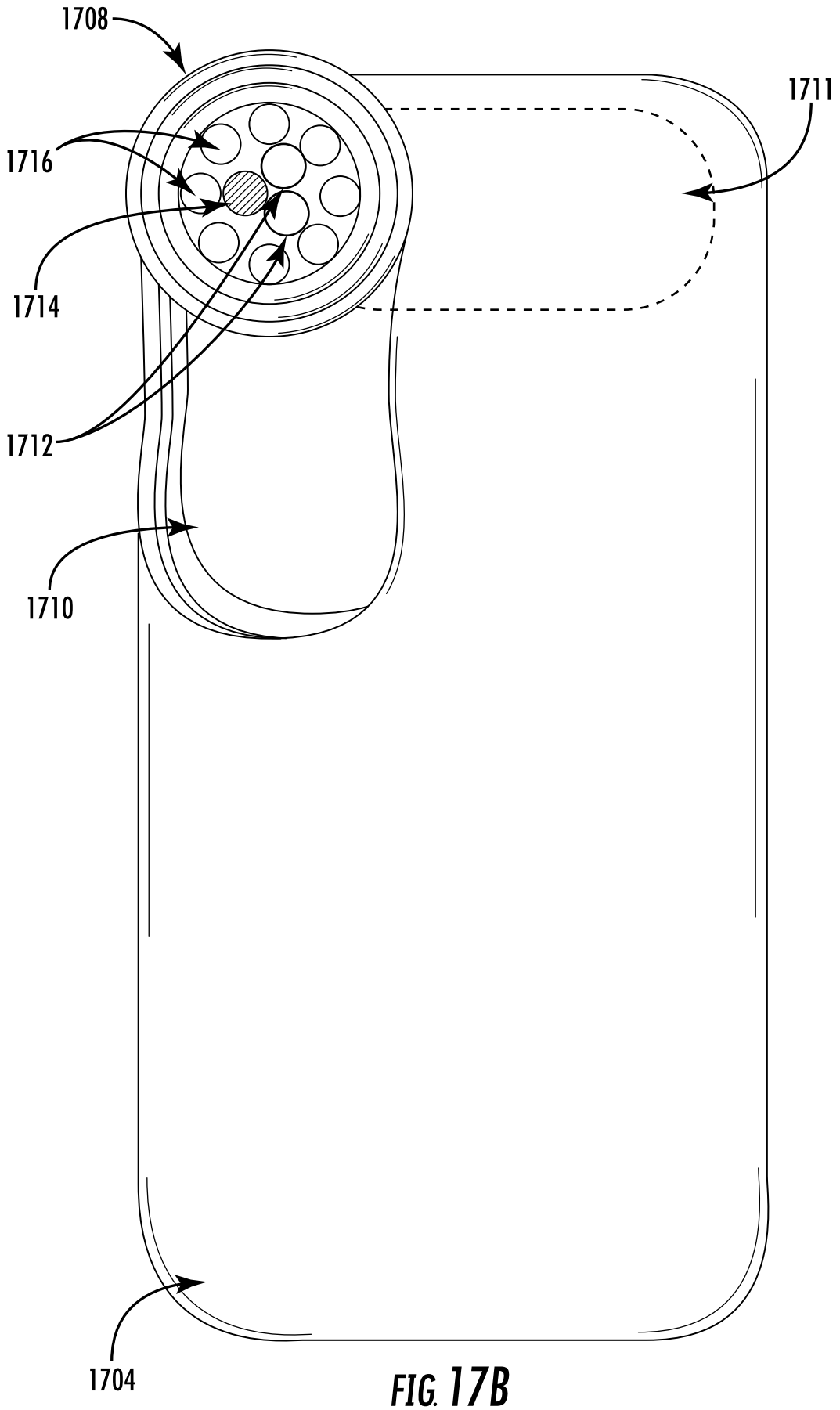

FIG. 17B