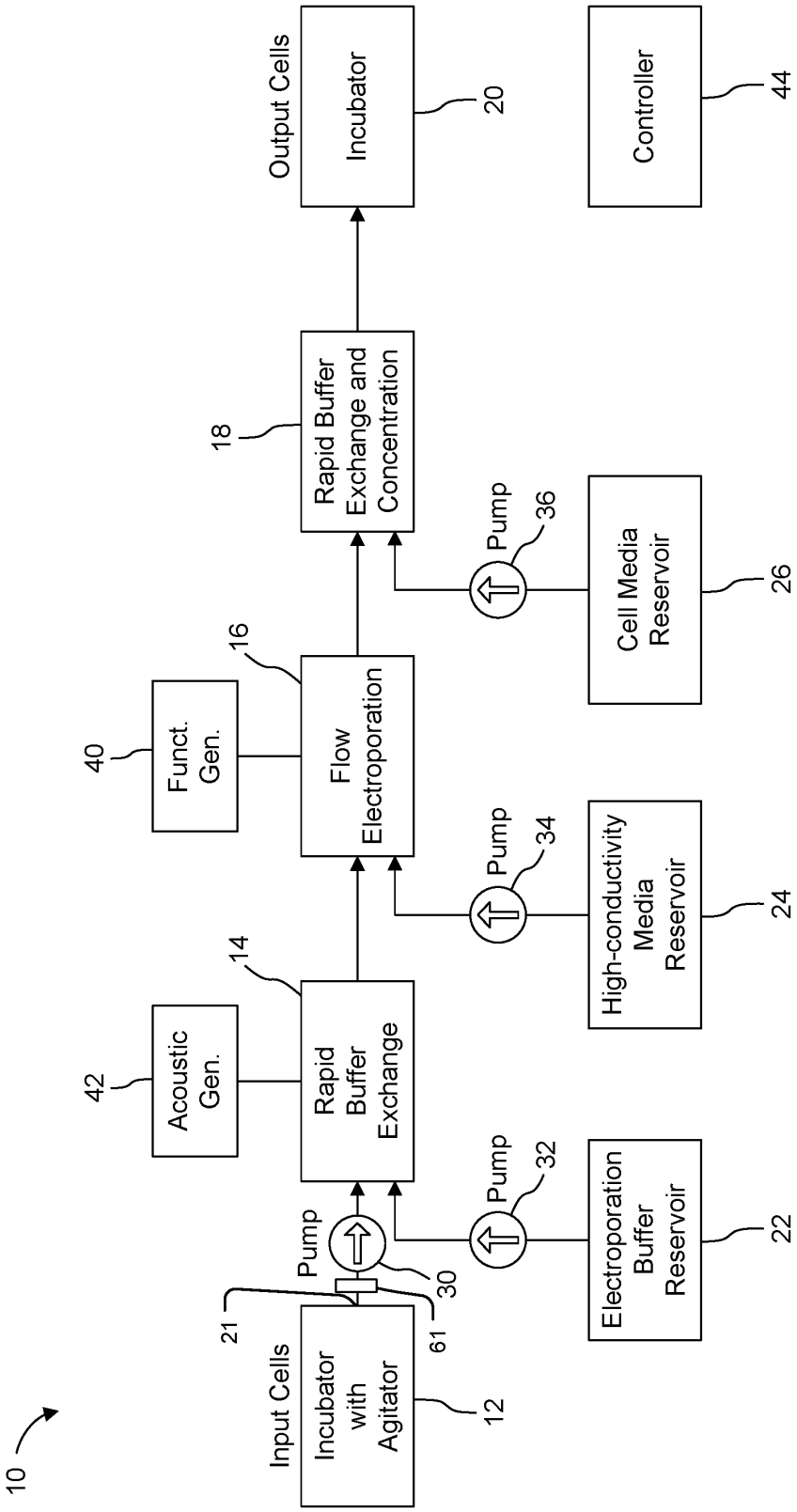
10
Input Cells
Incubator with Agitator
12
21
61
Pump
30
Pump
32
Electroporation Buffer Reservoir
22
Pump
34
High-conductivity Media Reservoir
24
Pump
36
Cell Media Reservoir
26
42
Acoustic Gen.
14
Rapid Buffer Exchange
40
Funct. Gen.
16
Flow Electroporation
18
Rapid Buffer Exchange and Concentration
Output Cells
Incubator
20
Controller
44

FIG. 1

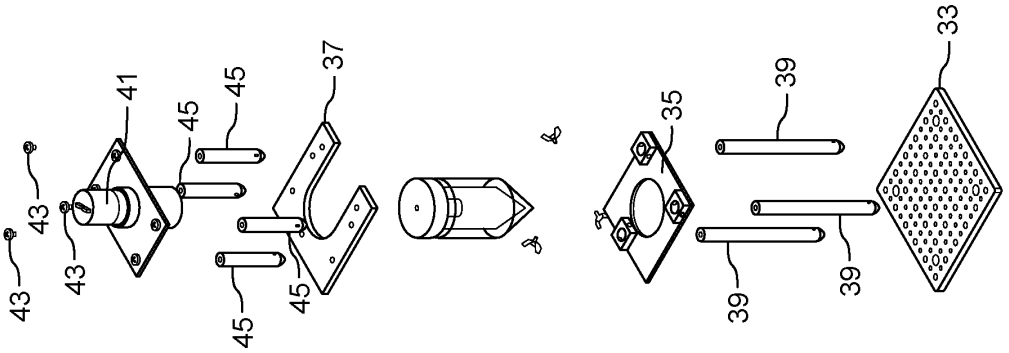
43
43
43
41
45
45
45
45
37
35
39
39
39
33

FIG. 2B

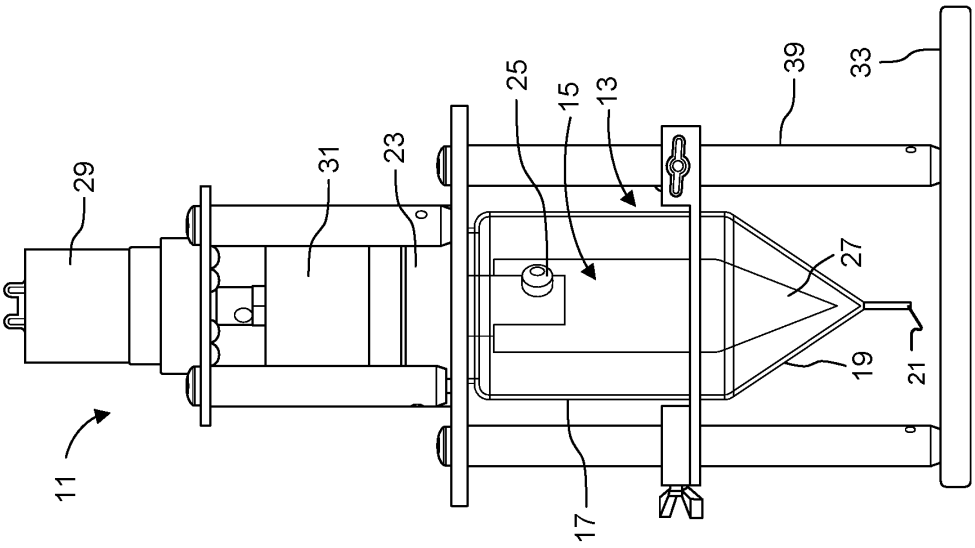
11
29
31
23
25
15
13
17
39
33
27
19
21

FIG. 2A

FIG. 2D

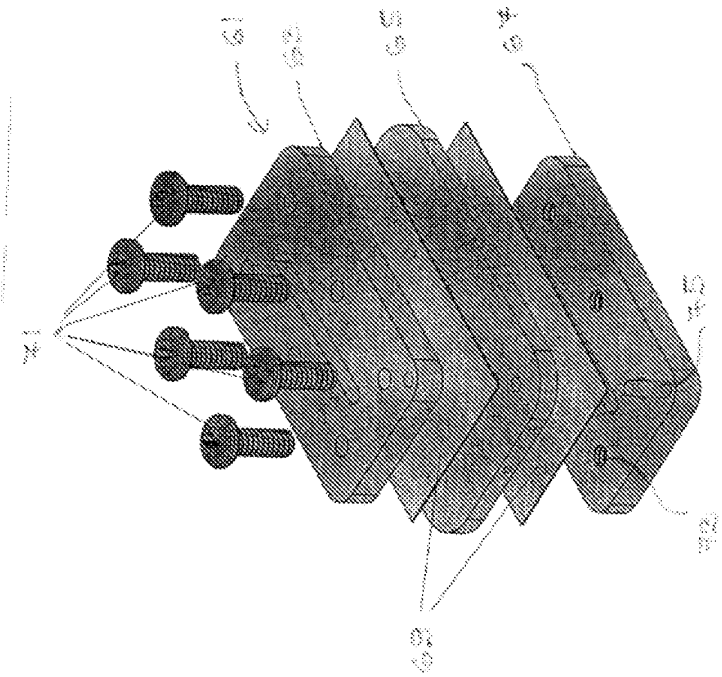

FIG. 2E

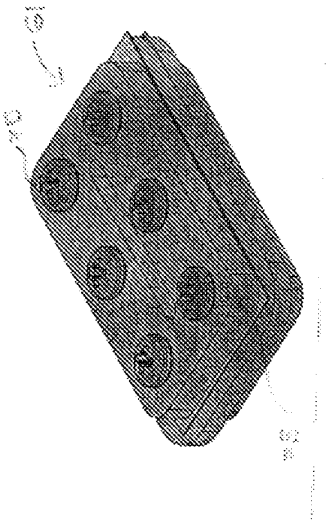

FIG. 2C

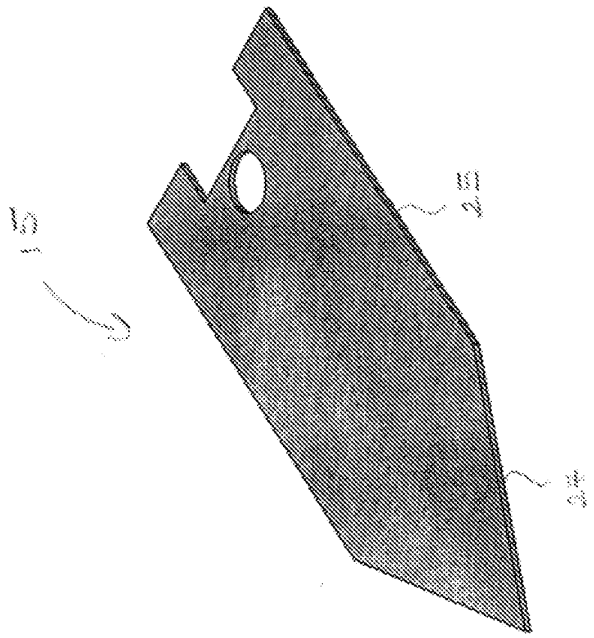

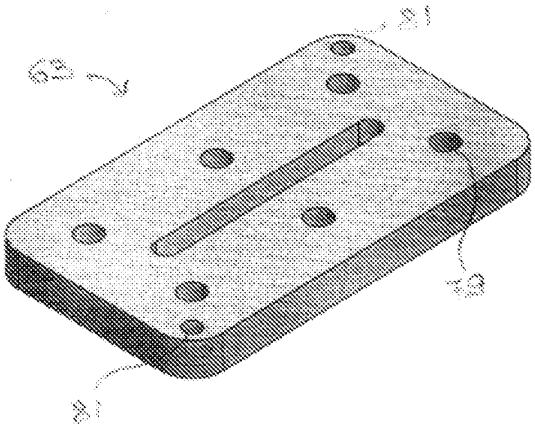

FIG. 2F

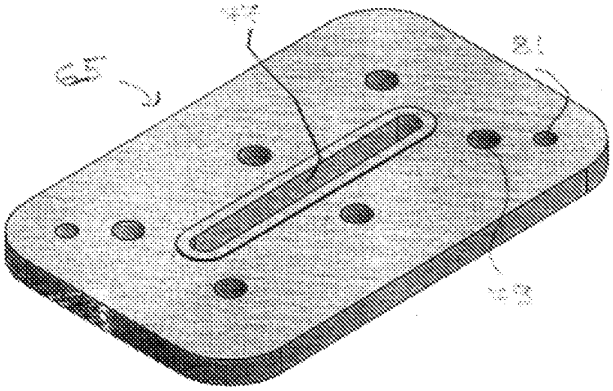

FIG. 2G

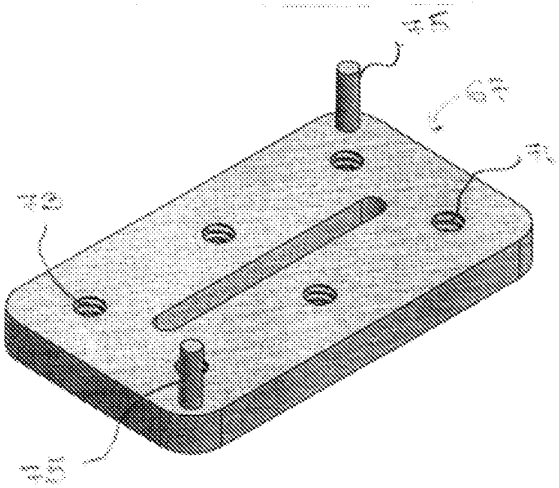

FIG. 2H

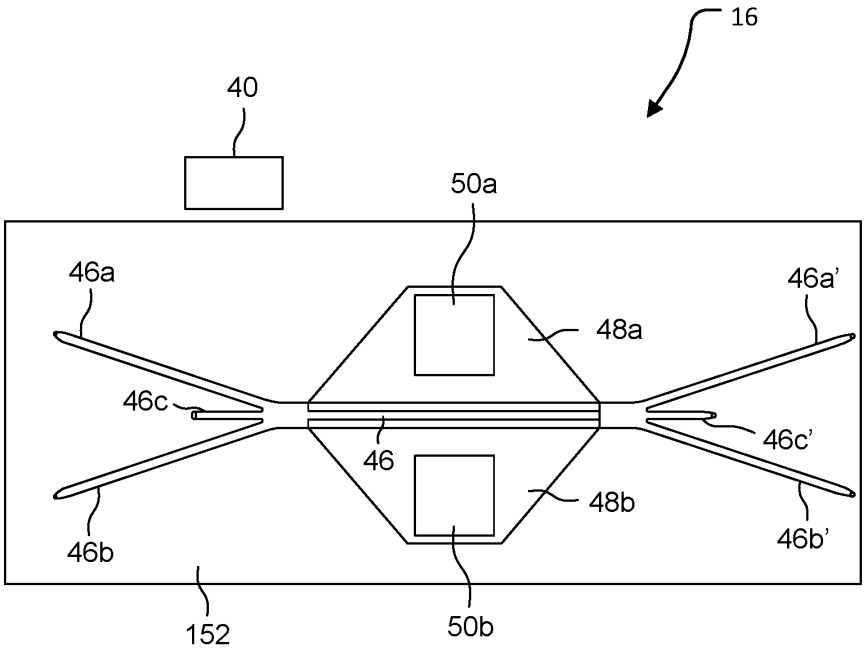

FIG. 3

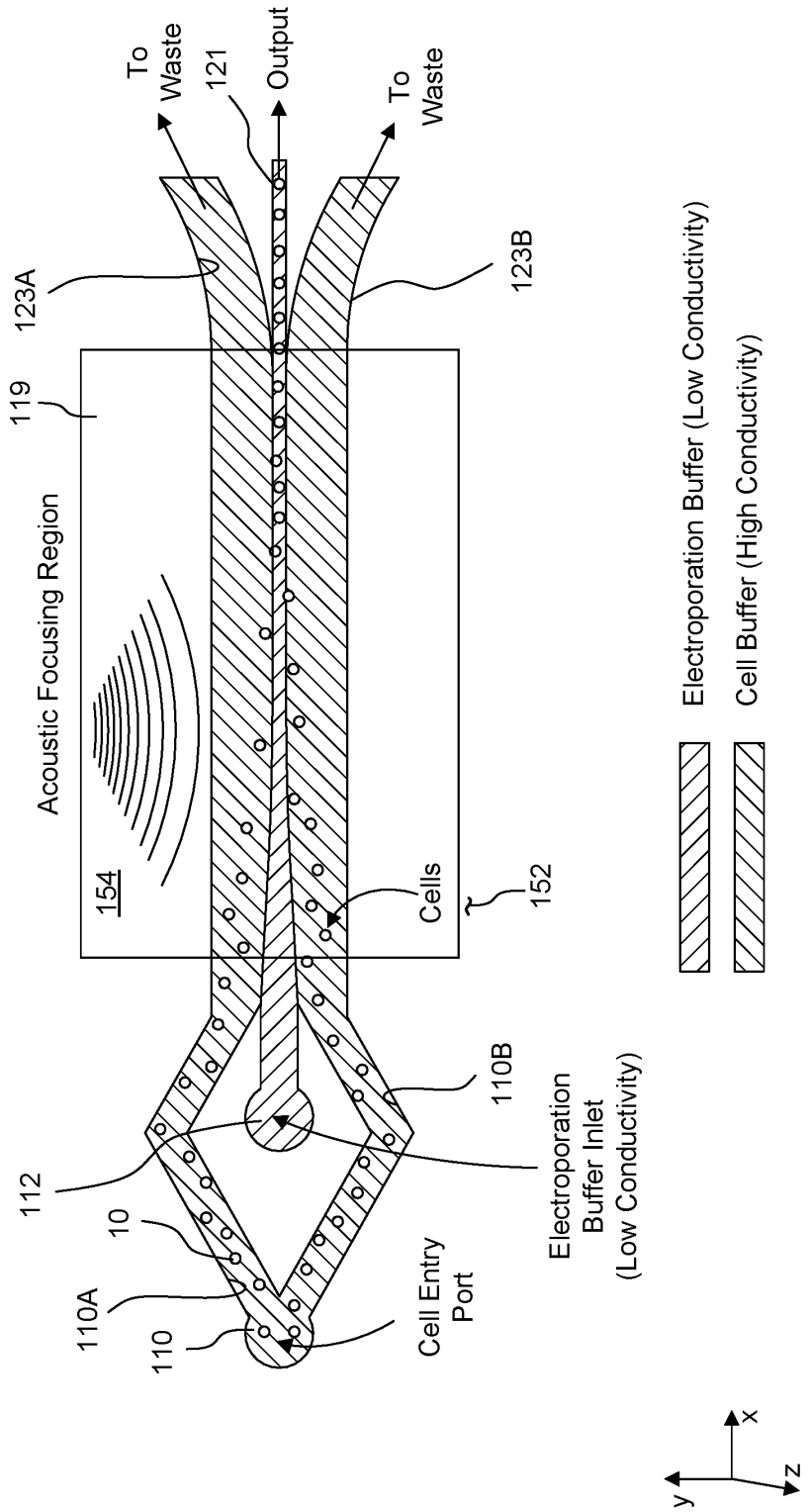
To Waste
121
Output
To Waste
123A
123B
119
Acoustic Focusing Region
154
Cells
152
110B
112
10
110A
110
Cell Entry Port
Electroporation Buffer Inlet (Low Conductivity)
Electroporation Buffer (Low Conductivity)
Cell Buffer (High Conductivity)
x
y
z

FIG. 4A

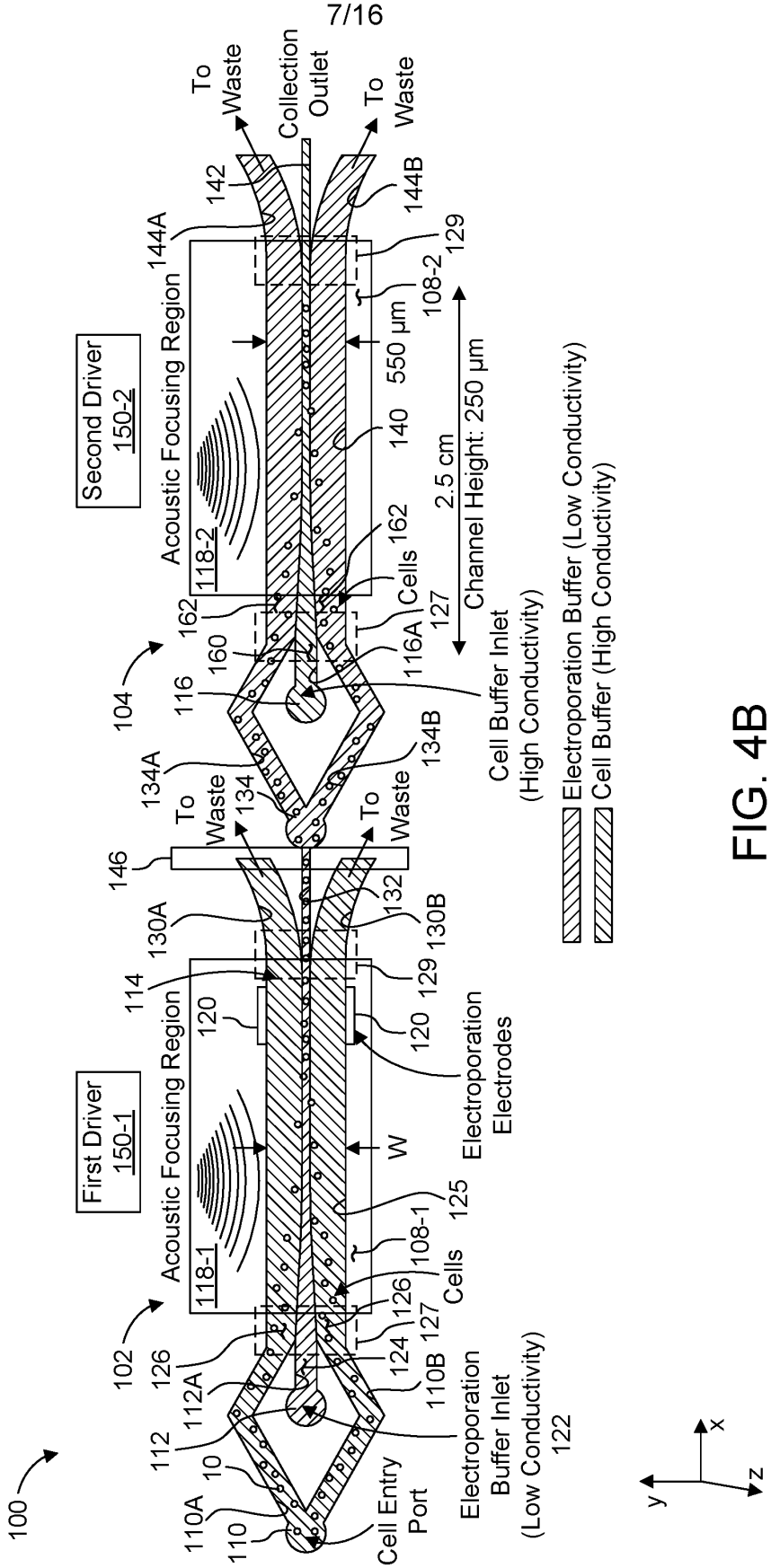
100
102
104
First Driver
150-1
Second Driver
150-2
Acoustic Focusing Region
118-1
118-2
Acoustic Focusing Region
To Waste
Collection Outlet
To Waste
To Waste
To Waste
142
144A
144B
129
108-2
550 µm
140
2.5 cm
Channel Height: 250 µm
162
Cells
162
127
160
116A
116
Cell Buffer Inlet
(High Conductivity)
134A
134
134B
146
132
130A
130B
114
129
120
120
Electroporation
Electrodes
W
125
108-1
Cells
126
127
126
124
112A
110B
112
10
110A
110
Cell Entry
Port
Electroporation
Buffer Inlet
(Low Conductivity)
122
Electroporation Buffer (Low Conductivity)
Cell Buffer (High Conductivity)
x
y
z

FIG. 4B

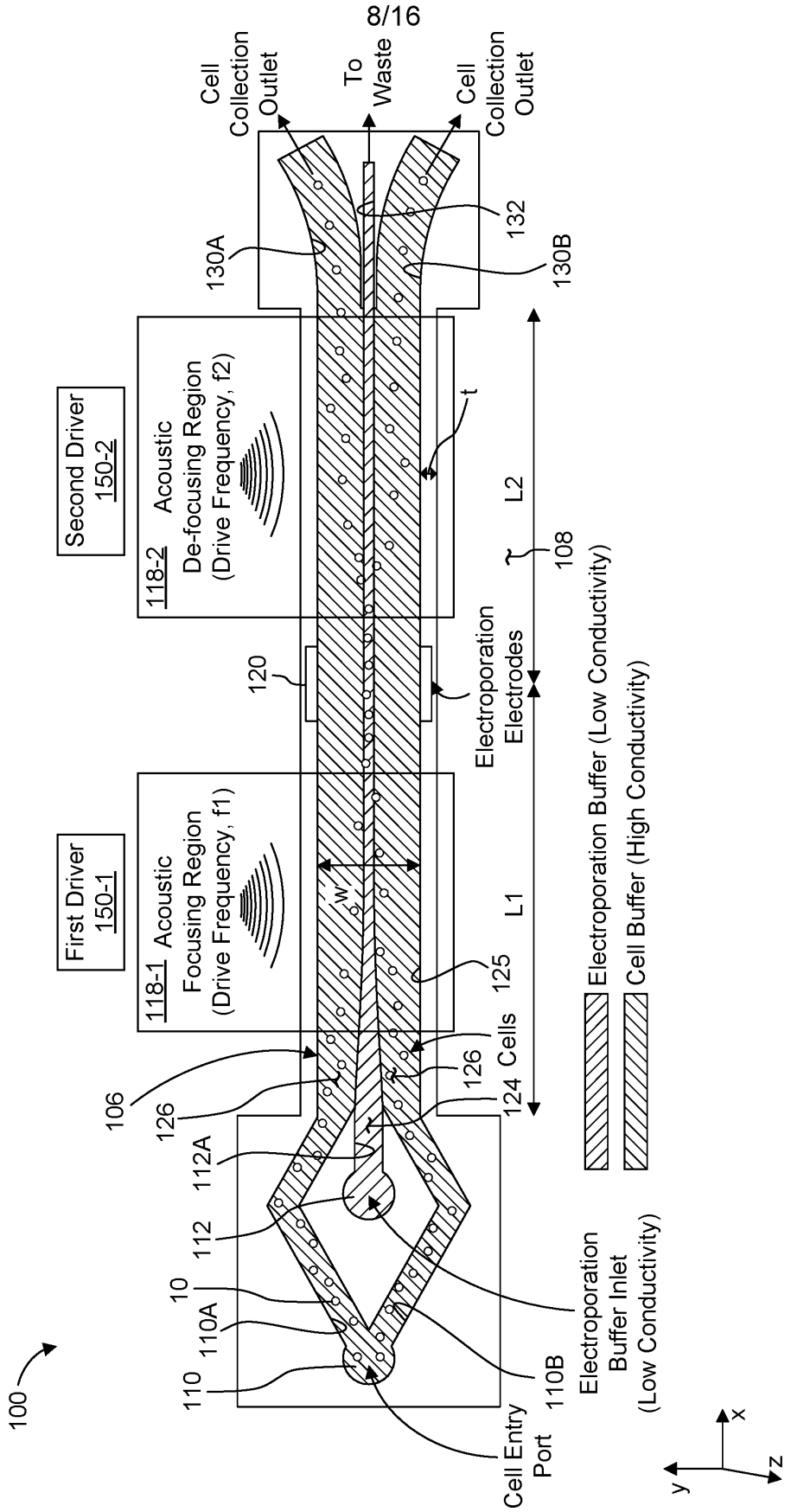
Cell Collection Outlet
To Waste
Cell Collection Outlet
132
130A
130B
Second Driver 150-2
118-2 Acoustic De-focusing Region (Drive Frequency, f2)
t
L2
108
120
Electroporation Electrodes
First Driver 150-1
118-1 Acoustic Focusing Region (Drive Frequency, f1)
w
L1
125
Cells
126
124
106
126
112A
112
10
110A
110
110B
Electroporation Buffer Inlet (Low Conductivity)
Cell Entry Port
100
Electroporation Buffer (Low Conductivity)
Cell Buffer (High Conductivity)
x
y
z

FIG. 4C

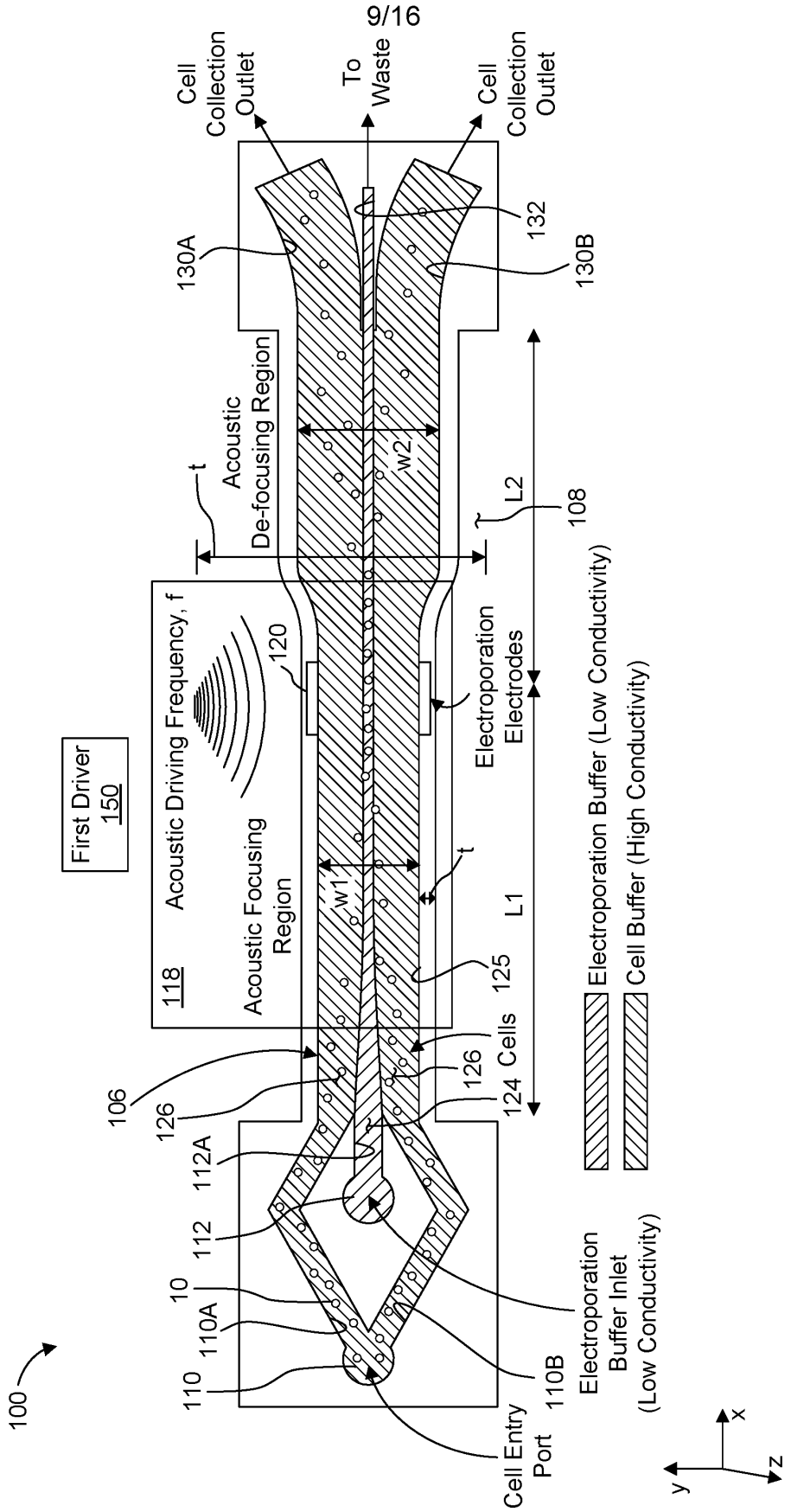
100
110
110A
10
112
112A
126
106
124
Cells
125
L1
w1
t
118
Acoustic Focusing Region
Acoustic Driving Frequency, f
First Driver
150
120
Electroporation Electrodes
Electroporation Buffer Inlet (Low Conductivity)
110B
Cell Entry Port
Electroporation Buffer (Low Conductivity)
Cell Buffer (High Conductivity)
108
L2
w2
Acoustic De-focusing Region
130A
130B
132
Cell Collection Outlet
To Waste
Cell Collection Outlet
x
y
z

FIG. 4D

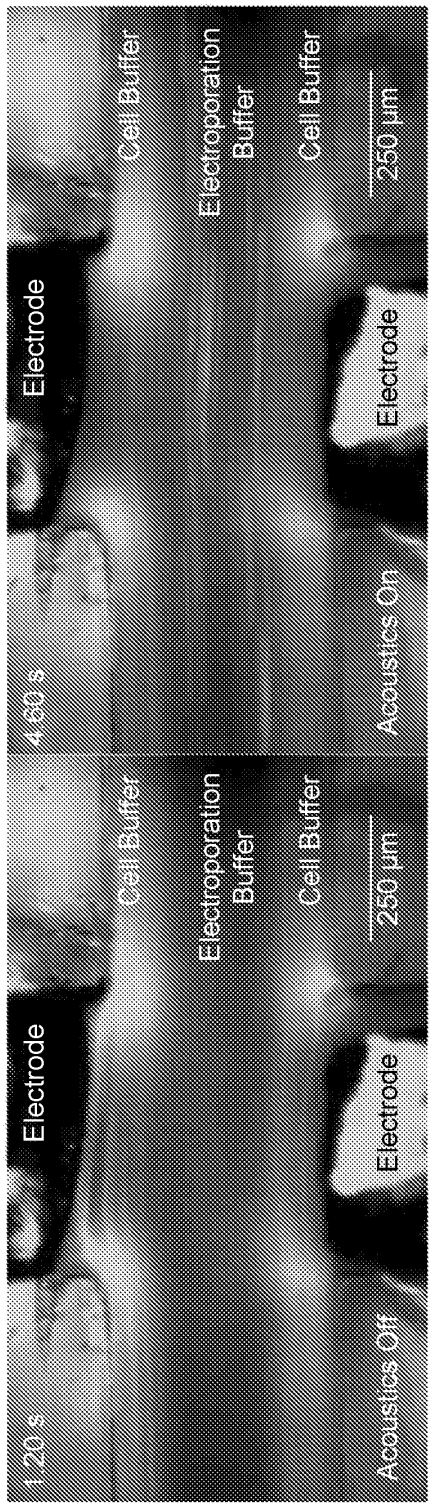
1.20 s
Acoustics Off
Electrode
Electrode
Cell Buffer
Electroporation Buffer
Cell Buffer
250 µm
4.60 s
Acoustics On
Electrode
Electrode
Cell Buffer
Electroporation Buffer
Cell Buffer
250 µm

FIG. 5A

FIG. 5B

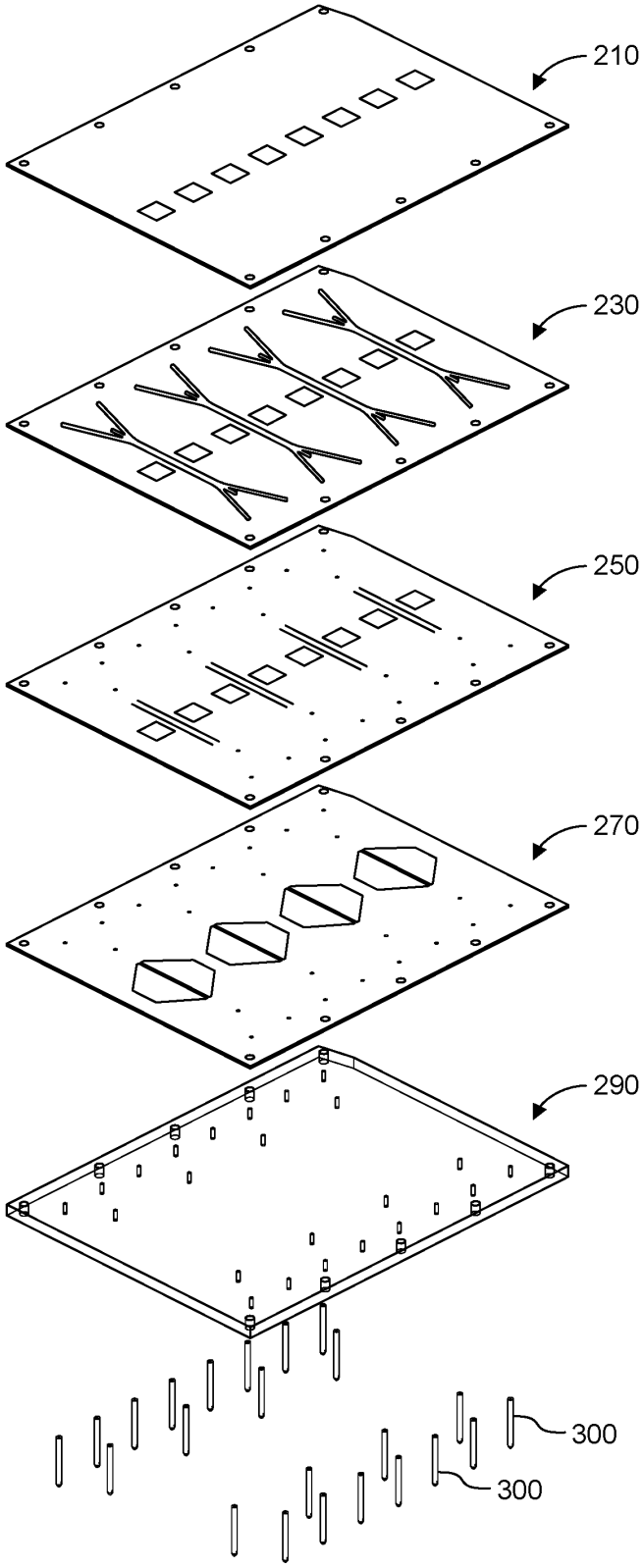

FIG. 6

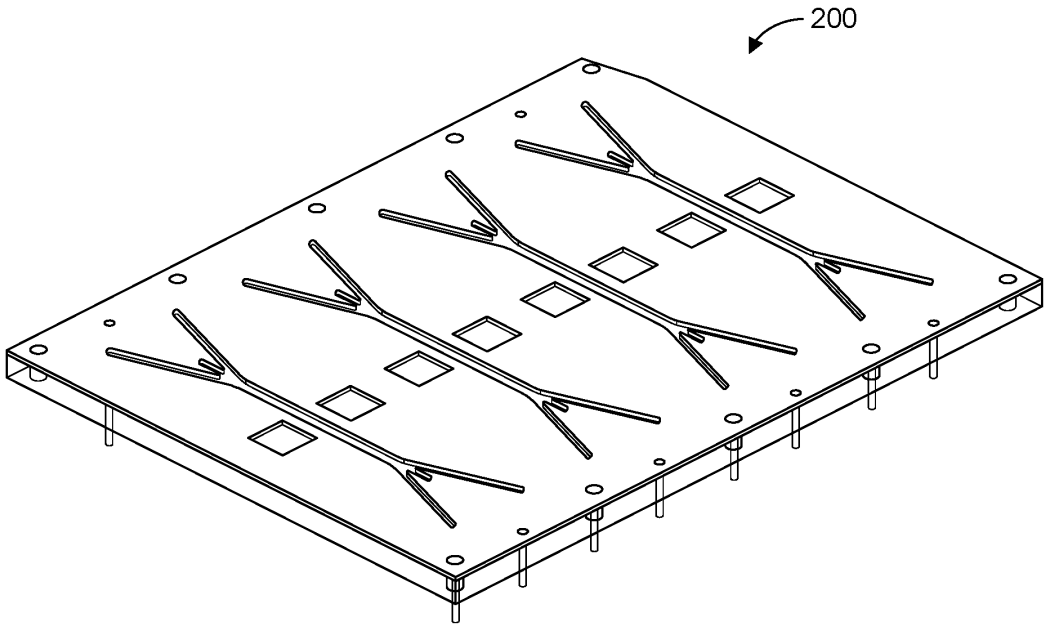

FIG. 7

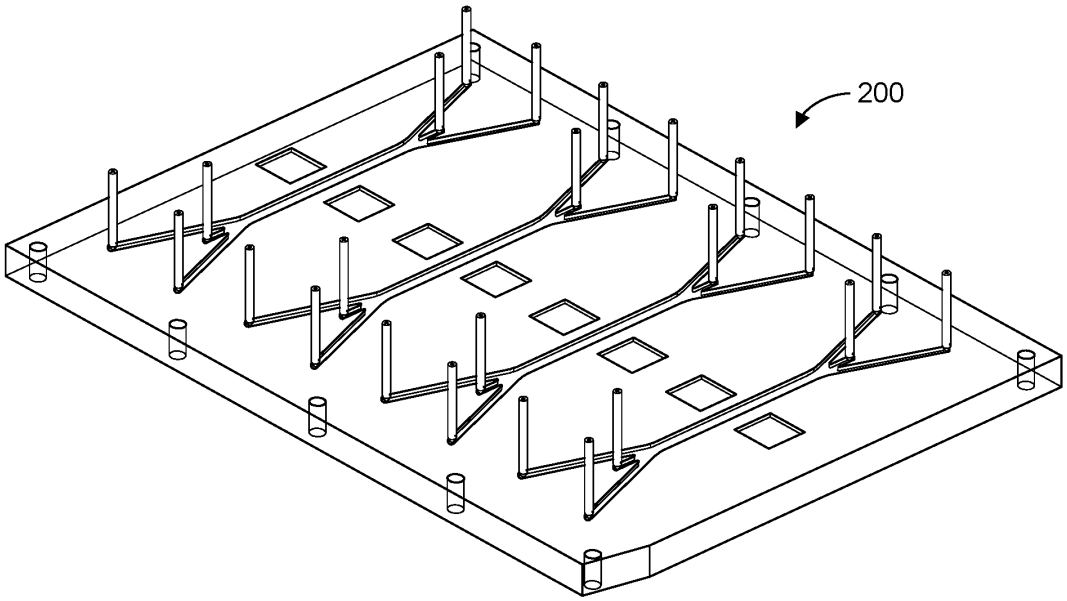

FIG. 8

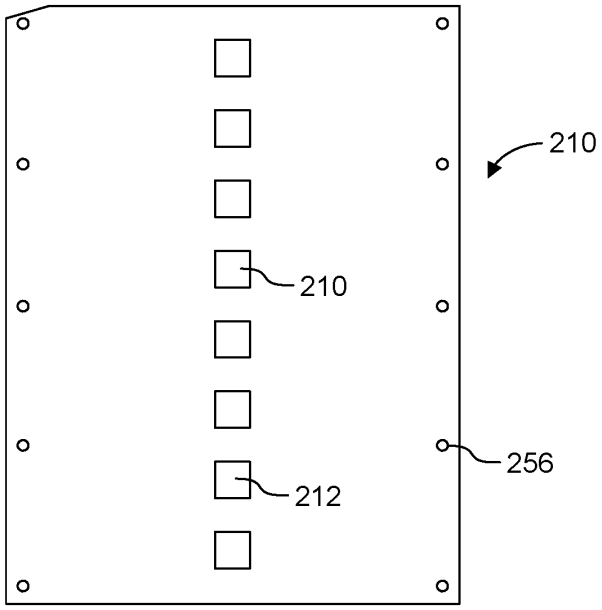

FIG. 9

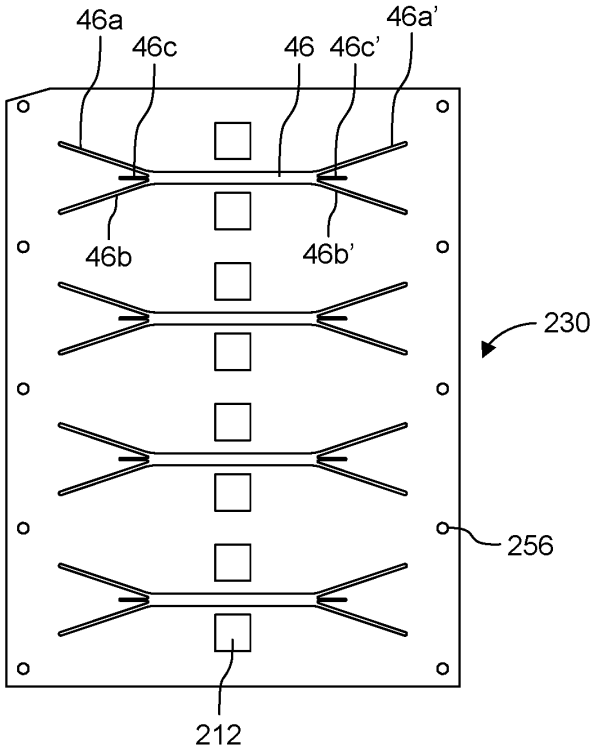

FIG. 10

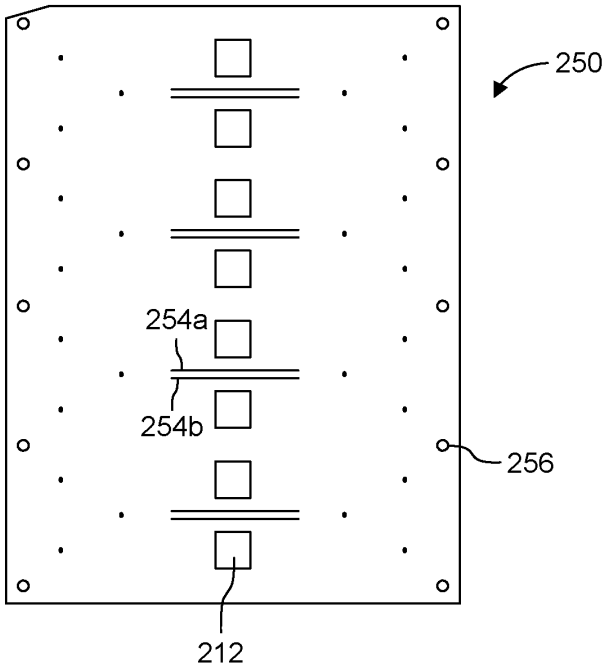

FIG. 11

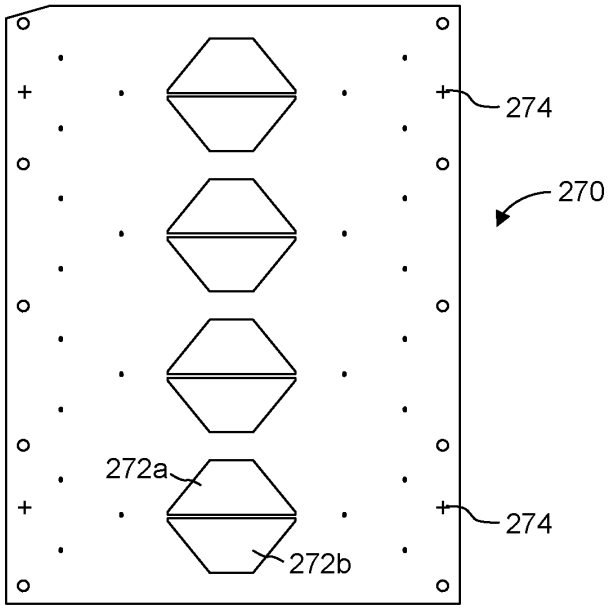

FIG. 12

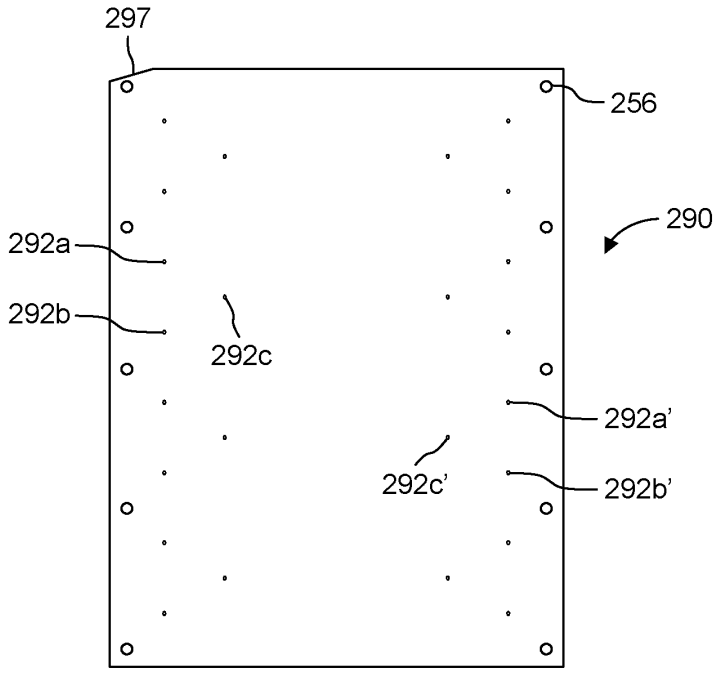

FIG. 13

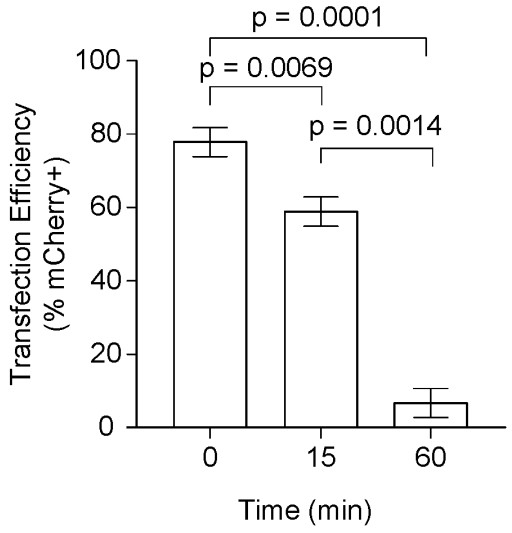

FIG. 14A

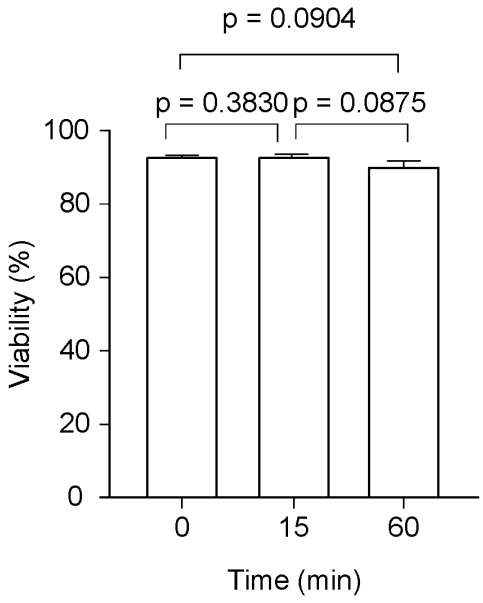

FIG. 14B

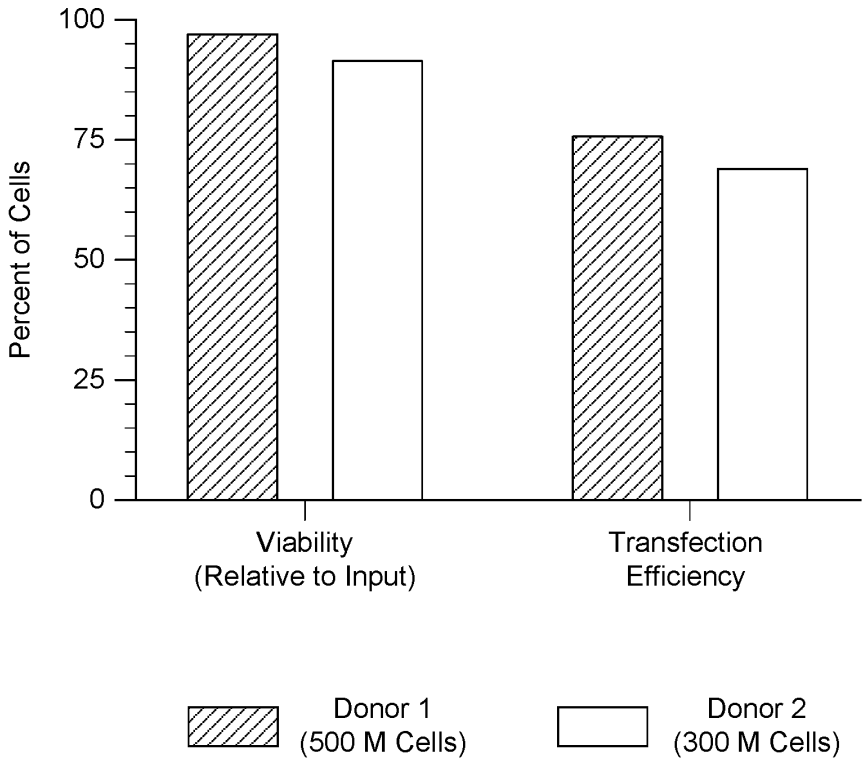
100
75
50
25
0
Percent of Cells
Viability
(Relative to Input)
Transfection
Efficiency
Donor 1
(500 M Cells)
Donor 2
(300 M Cells)

FIG. 15