[Fig. 2]

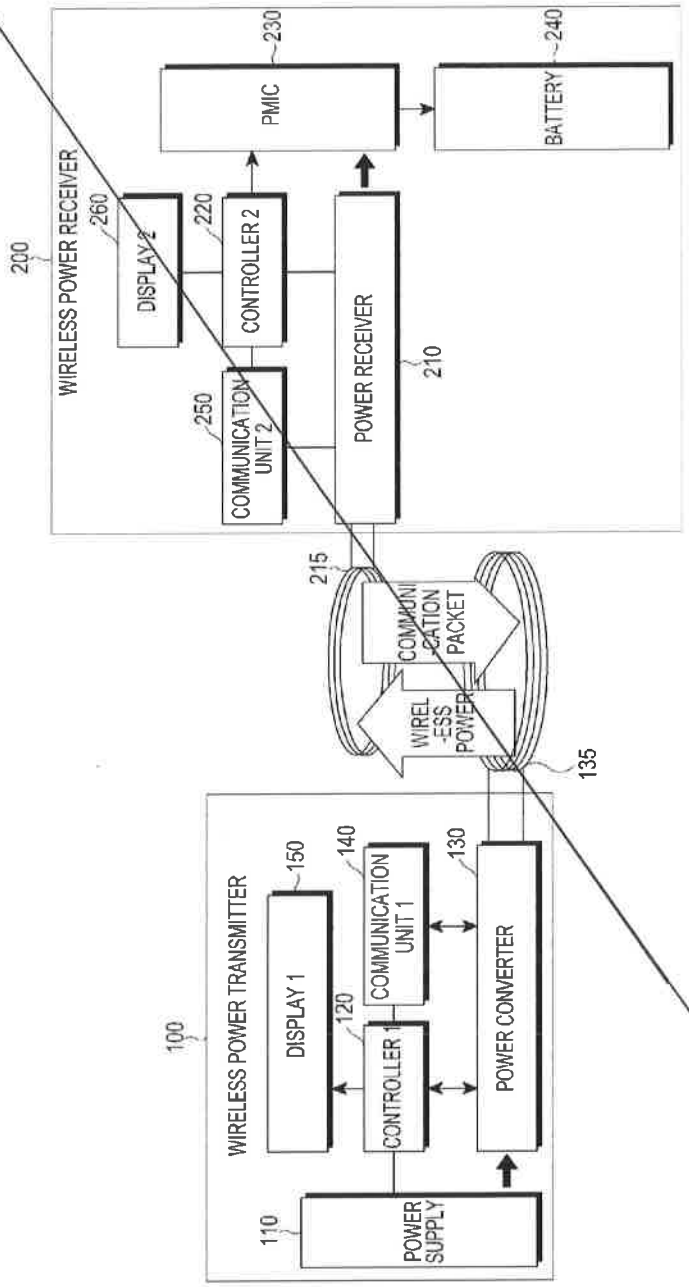
WIRELESS POWER RECEIVER
200
DISPLAY 2
260
CONTROLLER 2
220
PMIC
230
BATTERY
240
COMMUNICATION UNIT 2
250
POWER RECEIVER
210
215
COMMUNICATION PACKET
WIRELESS POWER
135
WIRELESS POWER TRANSMITTER
100
DISPLAY 1
150
COMMUNICATION UNIT 1
140
CONTROLLER 1
120
POWER CONVERTER
130
POWER SUPPLY
110

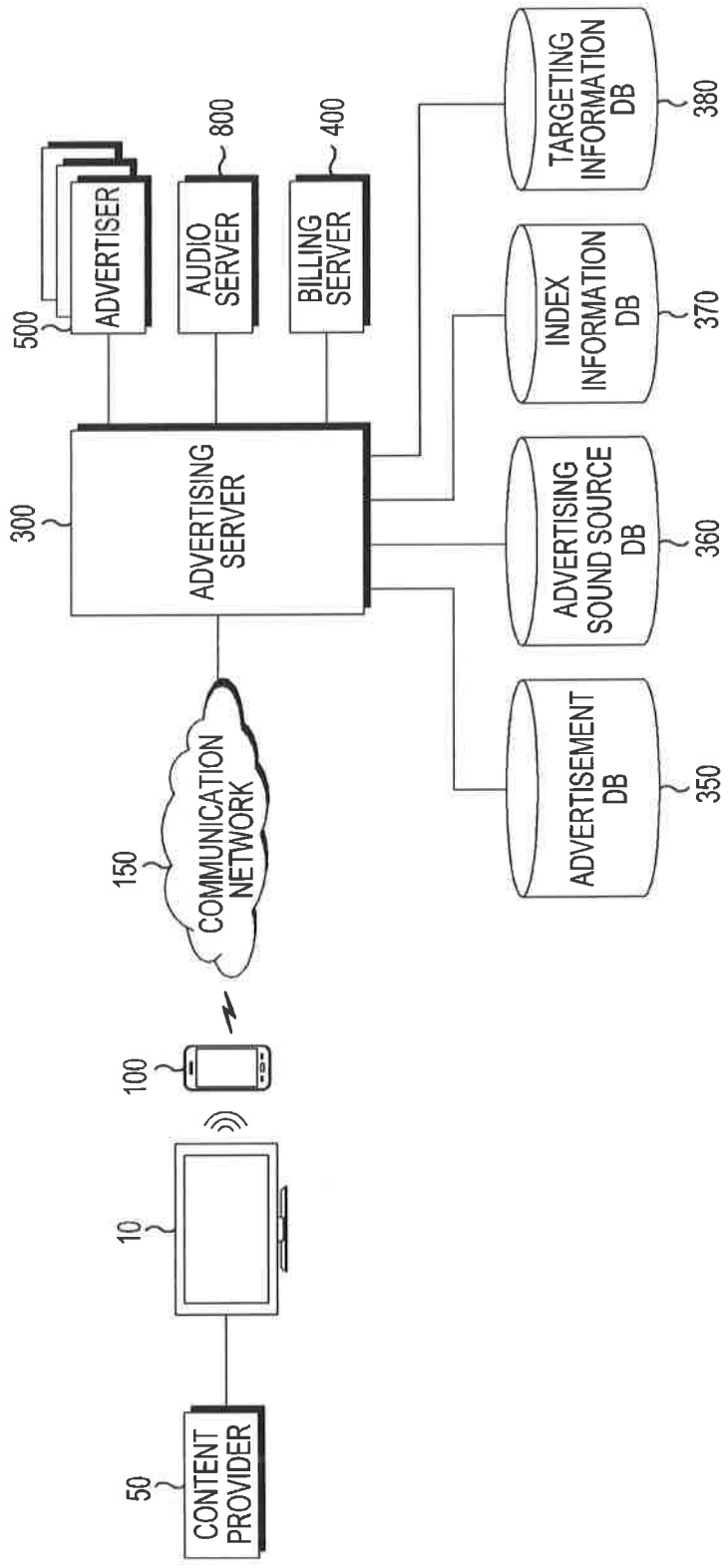
CONTENT PROVIDER
50
10
100
COMMUNICATION NETWORK
150
ADVERTISING SERVER
300
ADVERTISEMENT DB
350
ADVERTISING SOUND SOURCE DB
360
INDEX INFORMATION DB
370
TARGETING INFORMATION DB
380
ADVERTISER
500
AUDIO SERVER
800
BILLING SERVER
400

FIG.2