(12) INTERNATIONAL APPLICATION PUBLISHED UNDER THE PATENT COOPERATION TREATY (PCT)

(19) World Intellectual Property Organization
International Bureau

(43) International Publication Date
16 November 2006 (16.11.2006)

PCT

(10) International Publication Number
WO 2006/122067 A3

(51) International Patent Classification:
H04N 5/217 (2006.01)

(21) International Application Number:
PCT/US2006/017807

(22) International Filing Date: 9 May 2006 (09.05.2006)

(25) Filing Language: English

(26) Publication Language: English

(30) Priority Data:
11/125,097 10 May 2005 (10.05.2005) US

(71) Applicant *(for all designated States except US)*: **MICRON TECHNOLOGY, INC.** [US/US]; 8000 S. Federal Way, Boise, ID 83706-0006 (US).

(72) Inventors; and

(75) Inventors/Applicants *(for US only)*: **RYSINSKI, Jeffrey** [CA/US]; 2564 E. Red Cedar Lane, #303, Boise, ID 83716 (US). **VINAYAGAMOORTHY, Sanjayan** [CA/US]; 125 E. Mallard Drive, Unit 167, Boise, ID 83706 (US).

(74) Agent: **D'AMICO, Thomas, J.**; DICKSTEIN SHAPIRO MORIN & OSHINSKY LLP, 2101 L Street Nw, Washington, DC 20037-1526 (US).

(81) Designated States *(unless otherwise indicated, for every kind of national protection available)*: AE, AG, AL, AM, AT, AU, AZ, BA, BB, BG, BR, BW, BY, BZ, CA, CH, CN, CO, CR, CU, CZ, DE, DK, DM, DZ, EC, EE, EG, ES, FI, GB, GD, GE, GH, GM, HR, HU, ID, IL, IN, IS, JP, KE, KG, KM, KN, KP, KR, KZ, LC, LK, LR, LS, LT, LU, LV, LY, MA, MD, MG, MK, MN, MW, MX, MZ, NA, NG, NI, NO, NZ, OM, PG, PH, PL, PT, RO, RU, SC, SD, SE, SG, SK, SL, SM, SY, TJ, TM, TN, TR, TT, TZ, UA, UG, US, UZ, VC, VN, YU, ZA, ZM, ZW.

(84) Designated States *(unless otherwise indicated, for every kind of regional protection available)*: ARIPO (BW, GH, GM, KE, LS, MW, MZ, NA, SD, SL, SZ, TZ, UG, ZM, ZW), Eurasian (AM, AZ, BY, KG, KZ, MD, RU, TJ, TM), European (AT, BE, BG, CH, CY, CZ, DE, DK, EE, ES, FI, FR, GB, GR, HU, IE, IS, IT, LT, LU, LV, MC, NL, PL, PT, RO, SE, SI, SK, TR), OAPI (BF, BJ, CF, CG, CI, CM, GA, GN, GQ, GW, ML, MR, NE, SN, TD, TG).

Published:
— *with international search report*

(88) Date of publication of the international search report:
22 March 2007

For two-letter codes and other abbreviations, refer to the "Guidance Notes on Codes and Abbreviations" appearing at the beginning of each regular issue of the PCT Gazette.

(54) Title: ECLIPSE ELIMNATION BY MONITORING THE PIXEL SIGNAL LEVEL

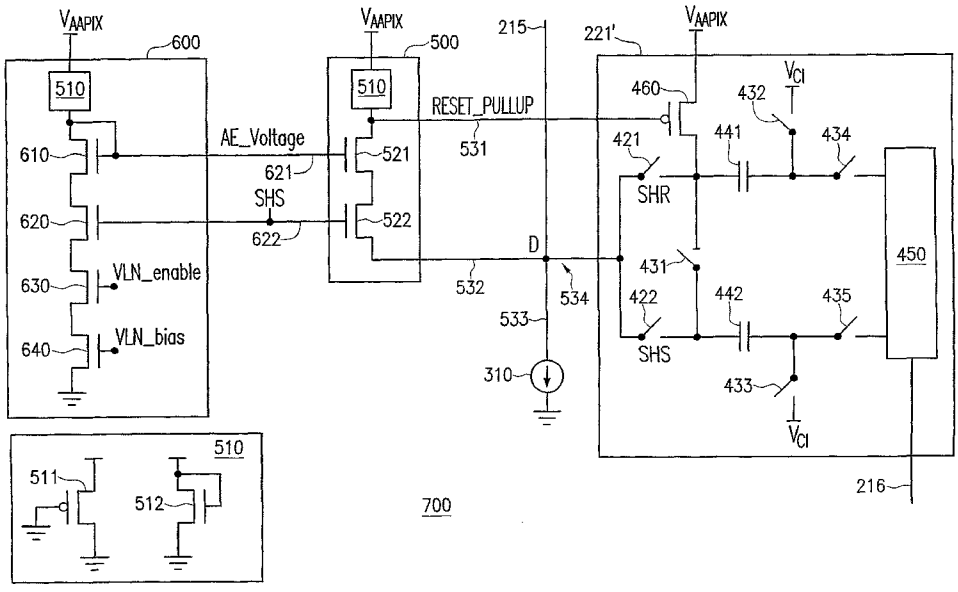

(57) Abstract: An anti-eclipse circuit for an imaging sensor monitors the photo signal level output by a pixel to determine whether the photo signal corresponds to the pixel being operated at a saturated state. If so, there is a risk that the pixel may be susceptible to an eclipse distortion. When the pixel is detected as being operated in a saturated state, the anti-eclipse circuit pulls up the reset signal level previously stored in a sample and hold circuit to an appropriate voltage level in order to prevent an eclipse distortion from arising.

WO 2006/122067 A3