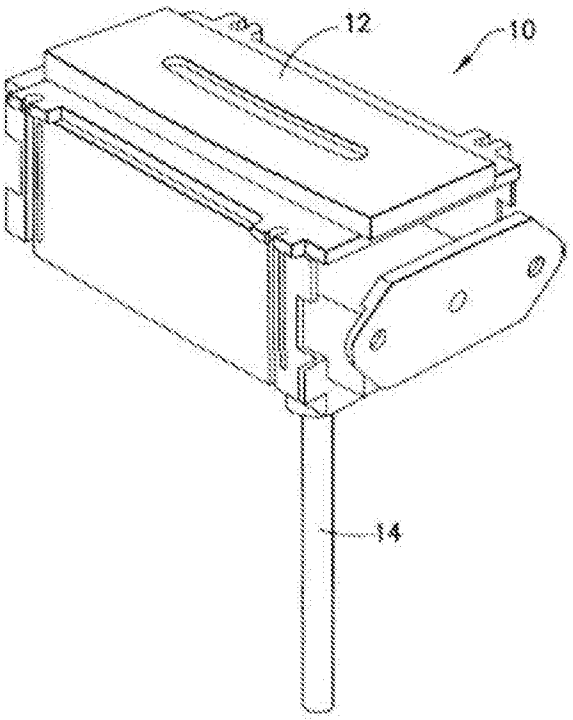

FIG. 1

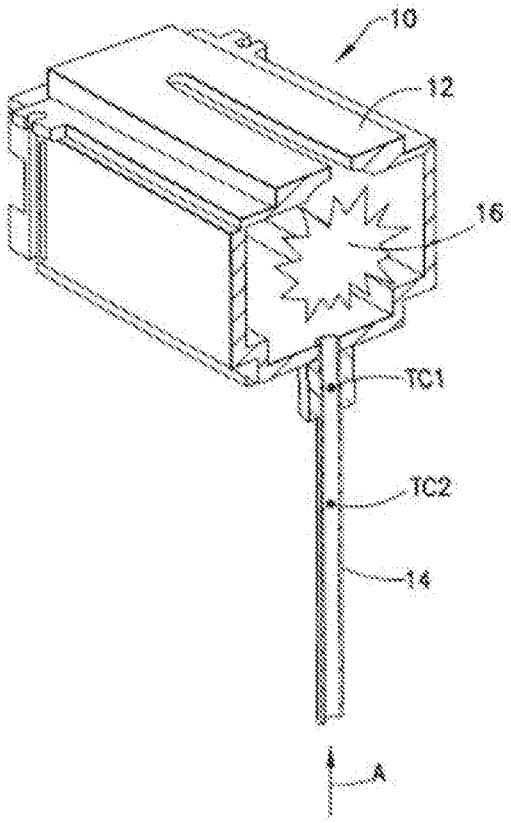

FIG. 2

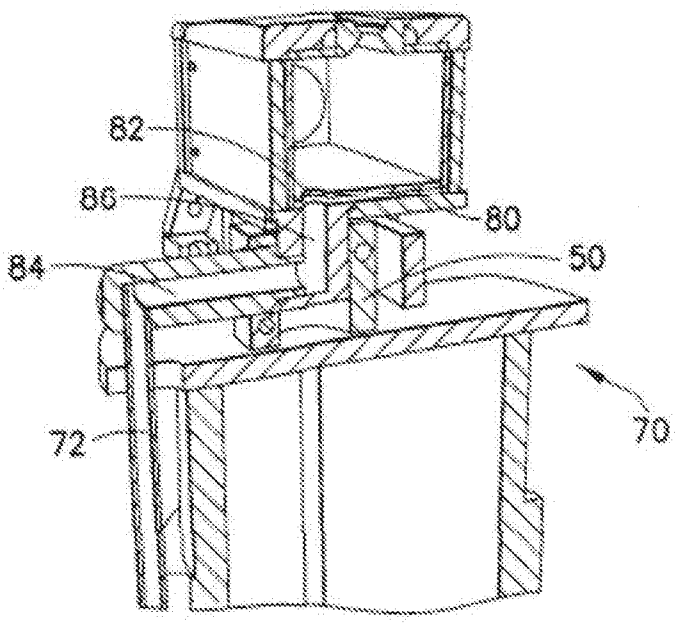

FIG. 3

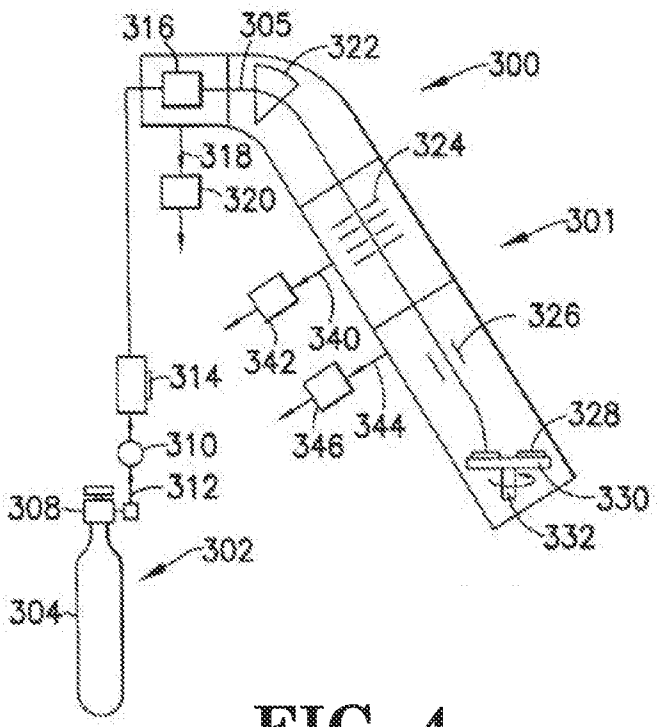
316
305
322
300
318
320
324
301
326
342
340
314
346
344
328
310
312
308
330
332
302
304

FIG. 4

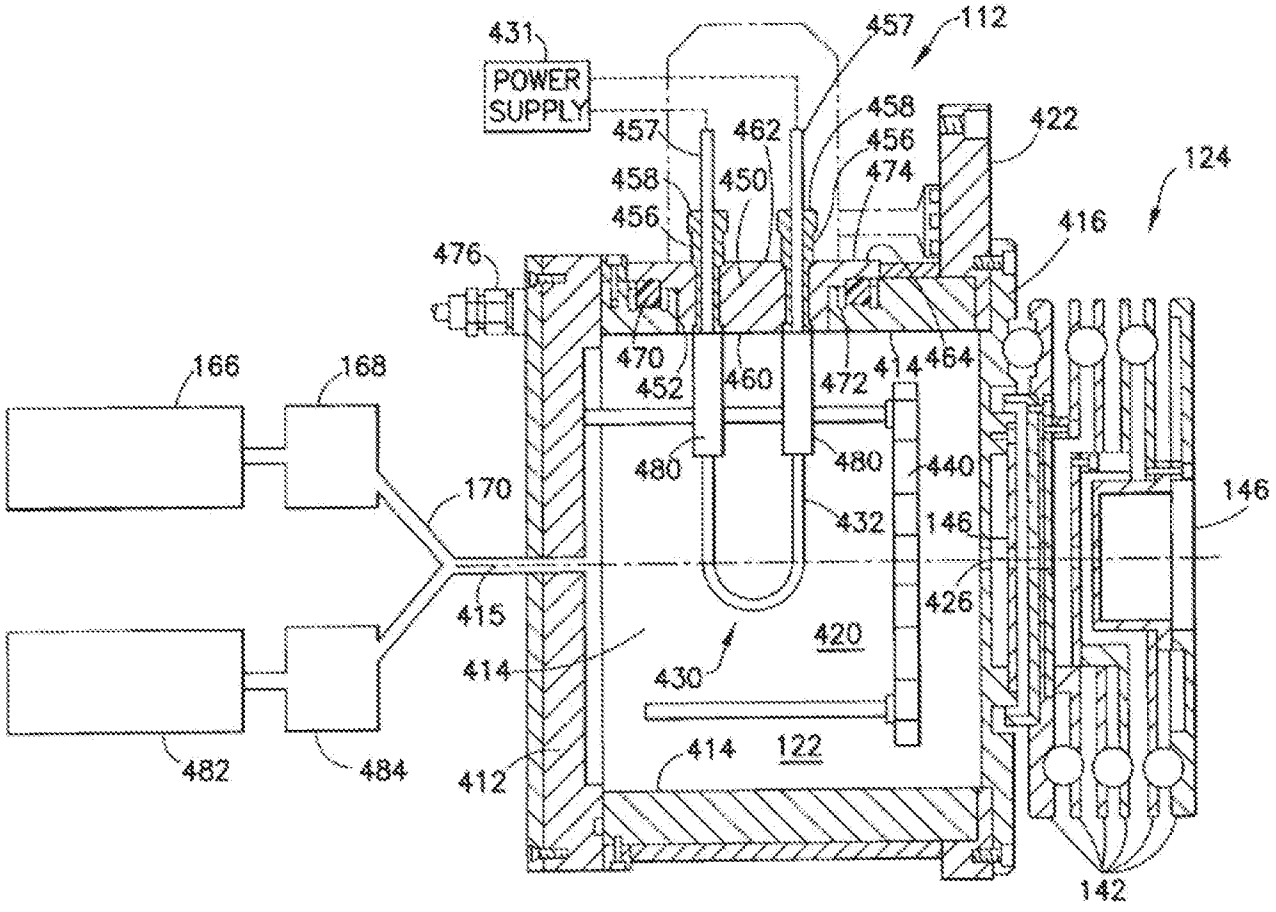
431
POWER SUPPLY
457
112
458
422
457
462
456
124
458
450
474
456
416
476
470
452
460
472
414
464
166
168
480
480
440
170
432
146
146
415
426
420
414
430
482
484
412
414
122
142

FIG. 5

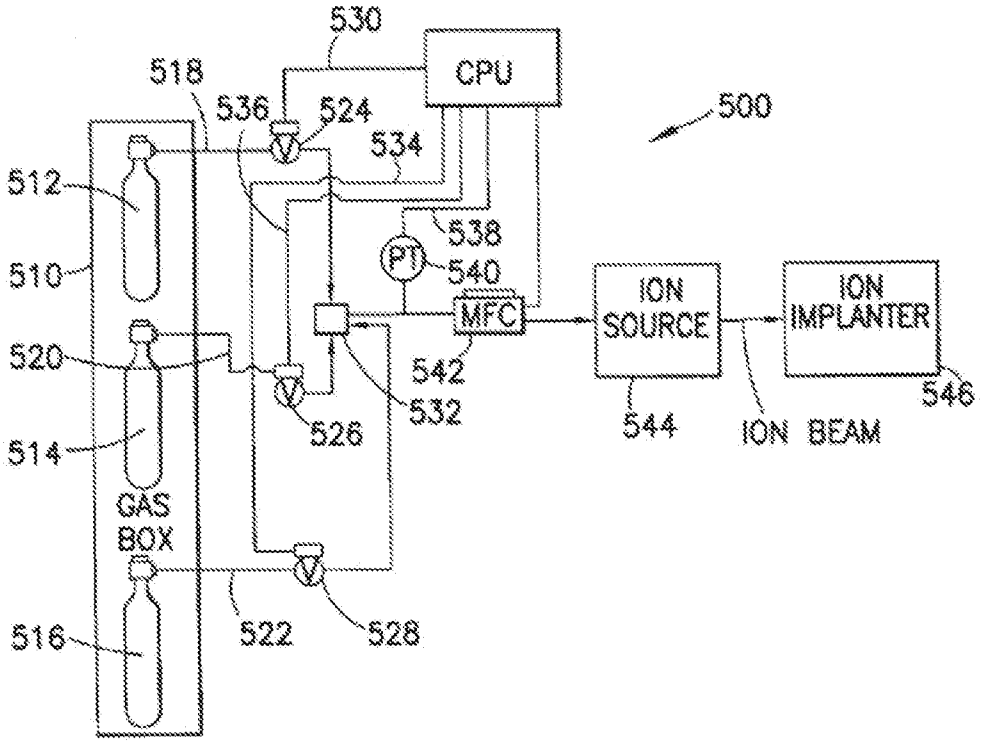
530
CPU
518
536
524
534
500
512
538
PT
540
510
ION SOURCE
ION IMPLANTER
520
MFC
542
532
526
546
544
ION BEAM
514
GAS BOX
516
522
528

FIG. 6

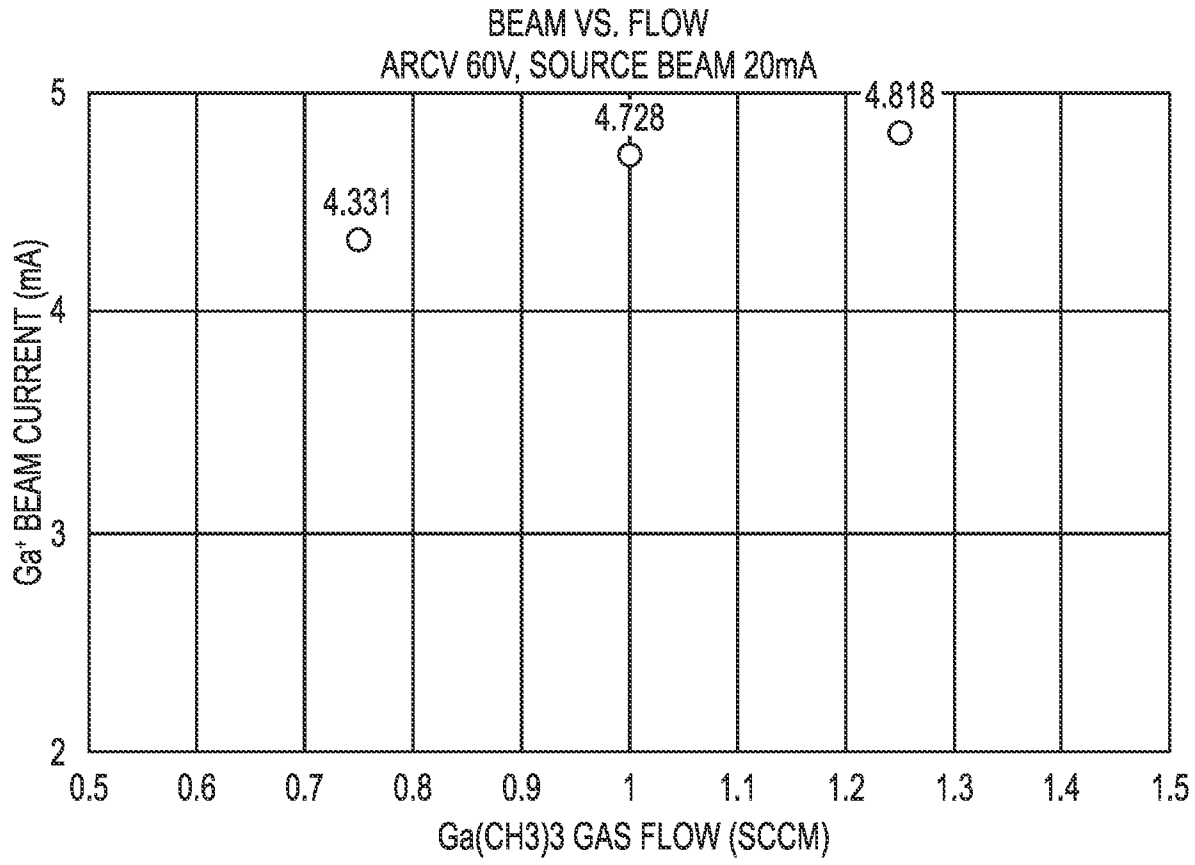
BEAM VS. FLOW
ARCV 60V, SOURCE BEAM 20mA
4.818
4.728
4.331
Ga+ BEAM CURRENT (mA)
5
4
3
2
0.5
0.6
0.7
0.8
0.9
1
1.1
1.2
1.3
1.4
1.5
Ga(CH3)3 GAS FLOW (SCCM)

FIG. 7A

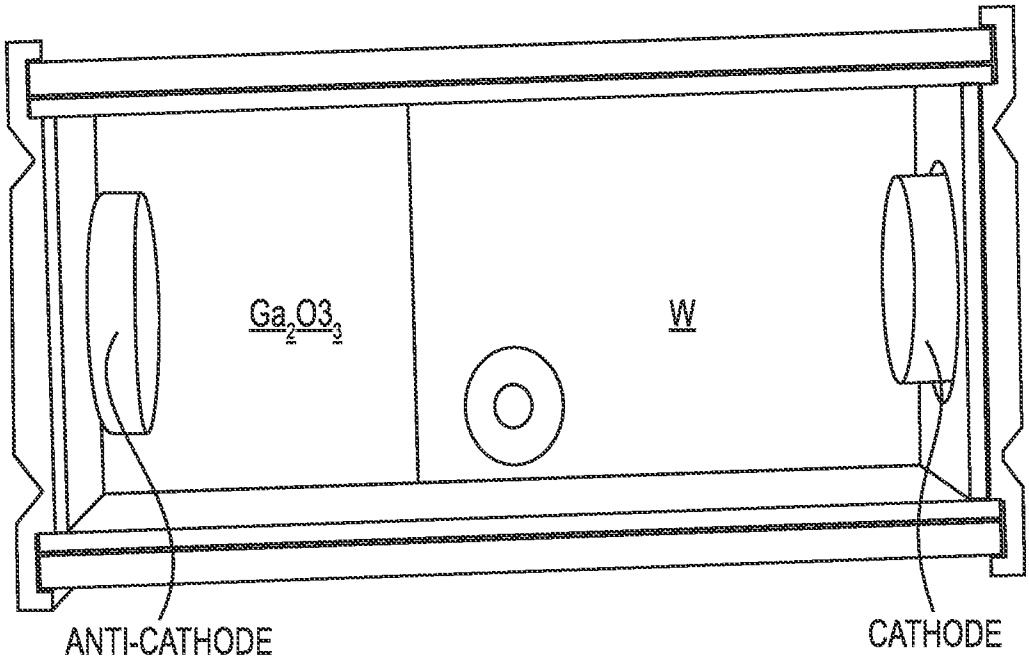
Ga2O3
W
ANTI-CATHODE
CATHODE

FIG. 8A

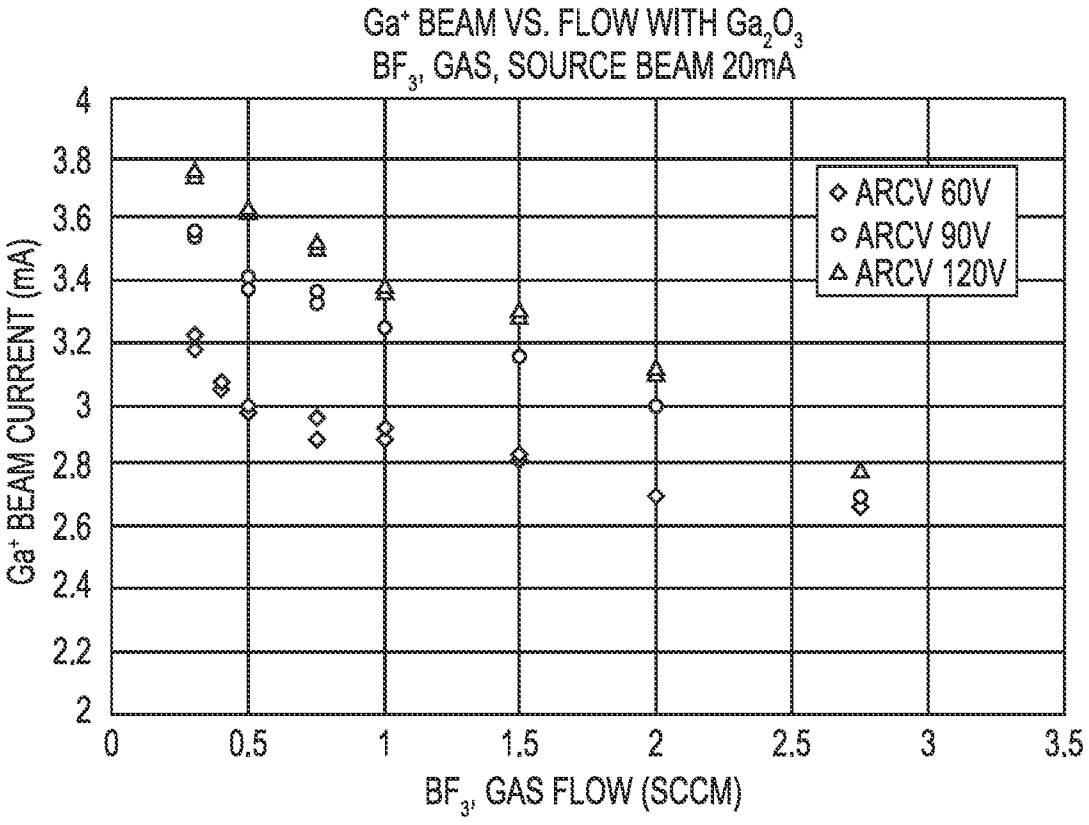
Ga+ BEAM VS. FLOW WITH Ga2O3
BF3, GAS, SOURCE BEAM 20mA
Ga+ BEAM CURRENT (mA)
BF3, GAS FLOW (SCCM)
ARCV 60V
ARCV 90V
ARCV 120V
4
3.8
3.6
3.4
3.2
3
2.8
2.6
2.4
2.2
2
0
0.5
1
1.5
2
2.5
3
3.5

FIG. 8B

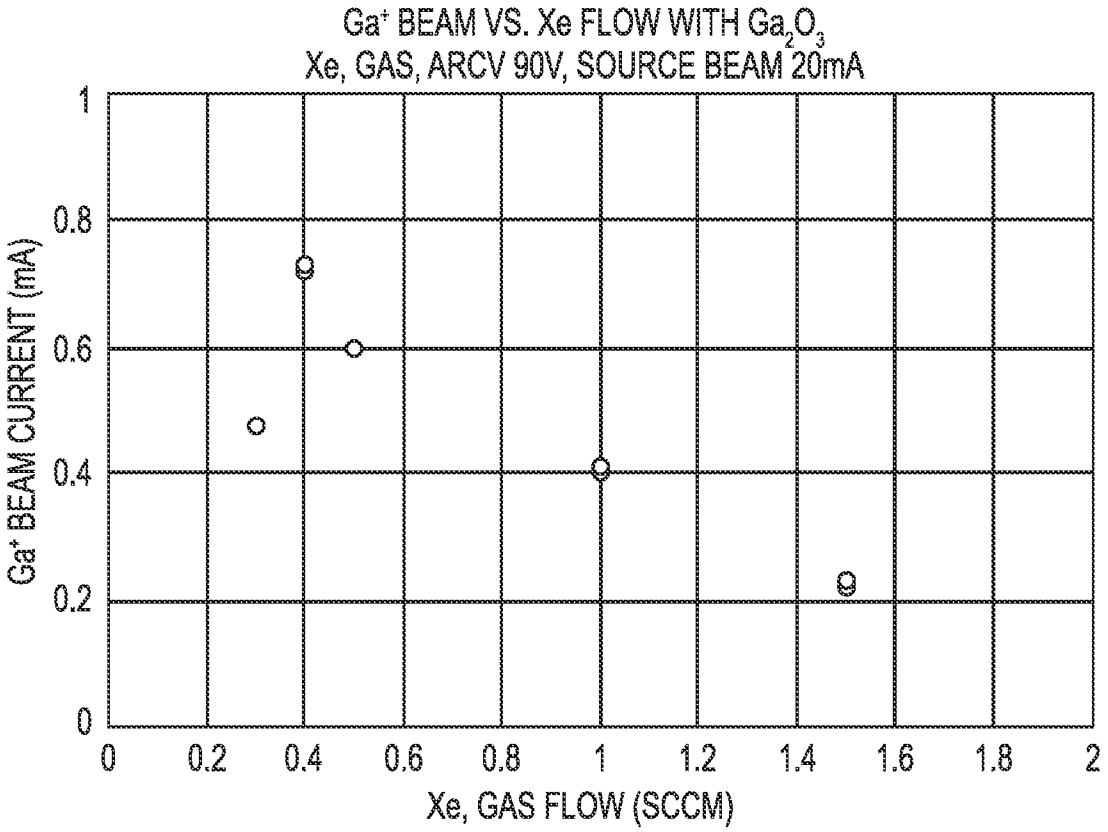
Ga+ BEAM VS. Xe FLOW WITH Ga2O3
Xe, GAS, ARCV 90V, SOURCE BEAM 20mA
Ga+ BEAM CURRENT (mA)
Xe, GAS FLOW (SCCM)
0
0.2
0.4
0.6
0.8
1
1.2
1.4
1.6
1.8
2

FIG. 8C

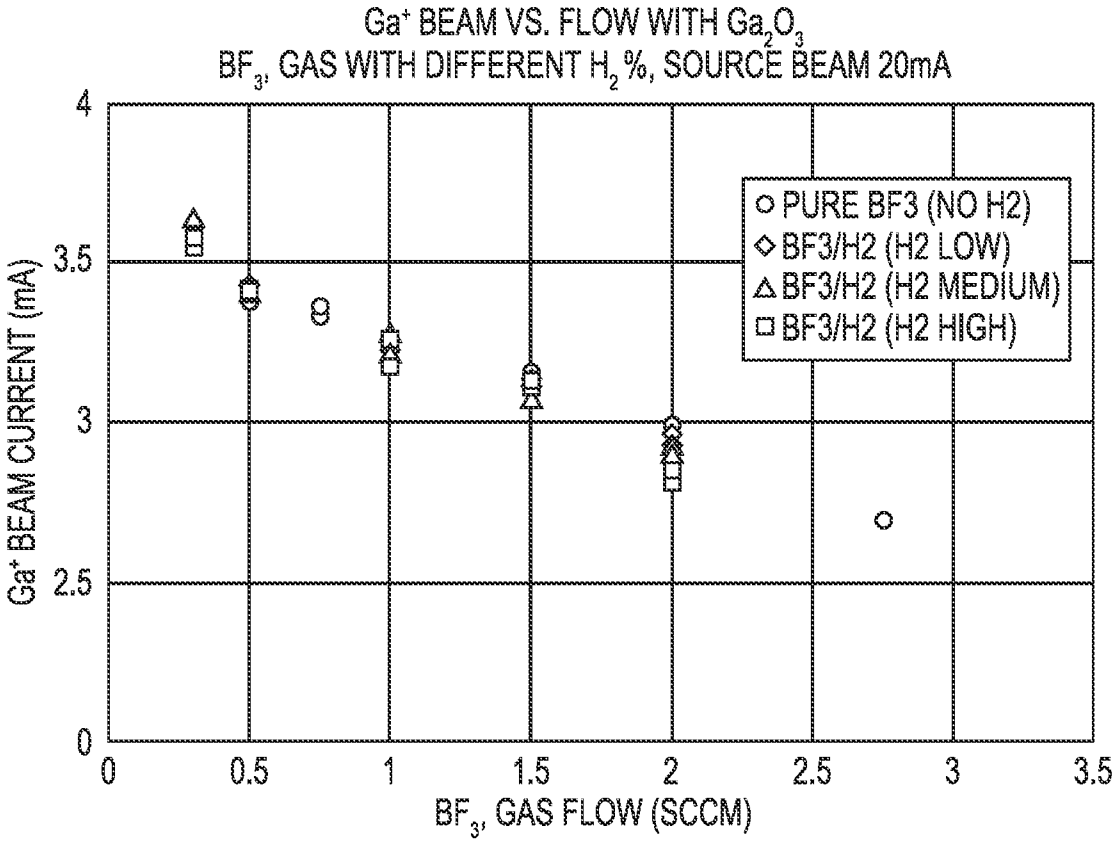
Ga+ BEAM VS. FLOW WITH Ga2O3
BF3, GAS WITH DIFFERENT H2 %, SOURCE BEAM 20mA
Ga+ BEAM CURRENT (mA)
BF3, GAS FLOW (SCCM)
PURE BF3 (NO H2)
BF3/H2 (H2 LOW)
BF3/H2 (H2 MEDIUM)
BF3/H2 (H2 HIGH)
0
0.5
1
1.5
2
2.5
3
3.5
4

FIG. 8D

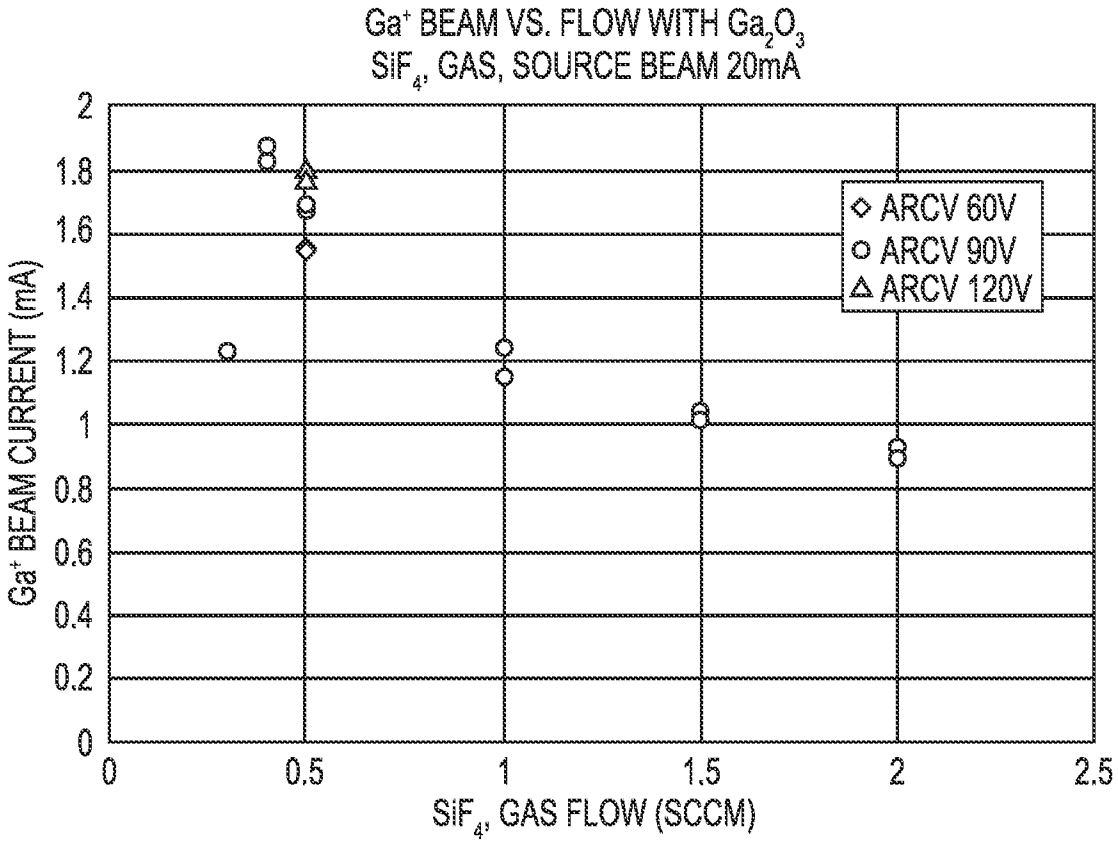
Ga+ BEAM VS. FLOW WITH Ga2O3
SiF4, GAS, SOURCE BEAM 20mA
Ga+ BEAM CURRENT (mA)
SiF4, GAS FLOW (SCCM)
ARCV 60V
ARCV 90V
ARCV 120V
0
0.2
0.4
0.6
0.8
1
1.2
1.4
1.6
1.8
2
0.5
1.5
2.5

FIG. 8E

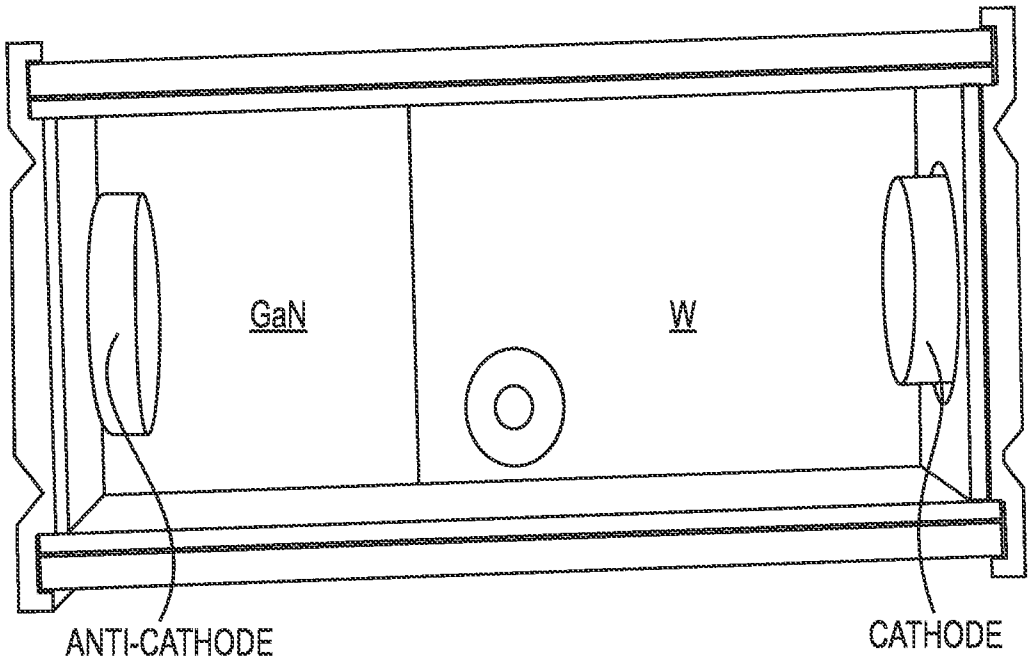
GaN
W
ANTI-CATHODE
CATHODE

FIG. 9A

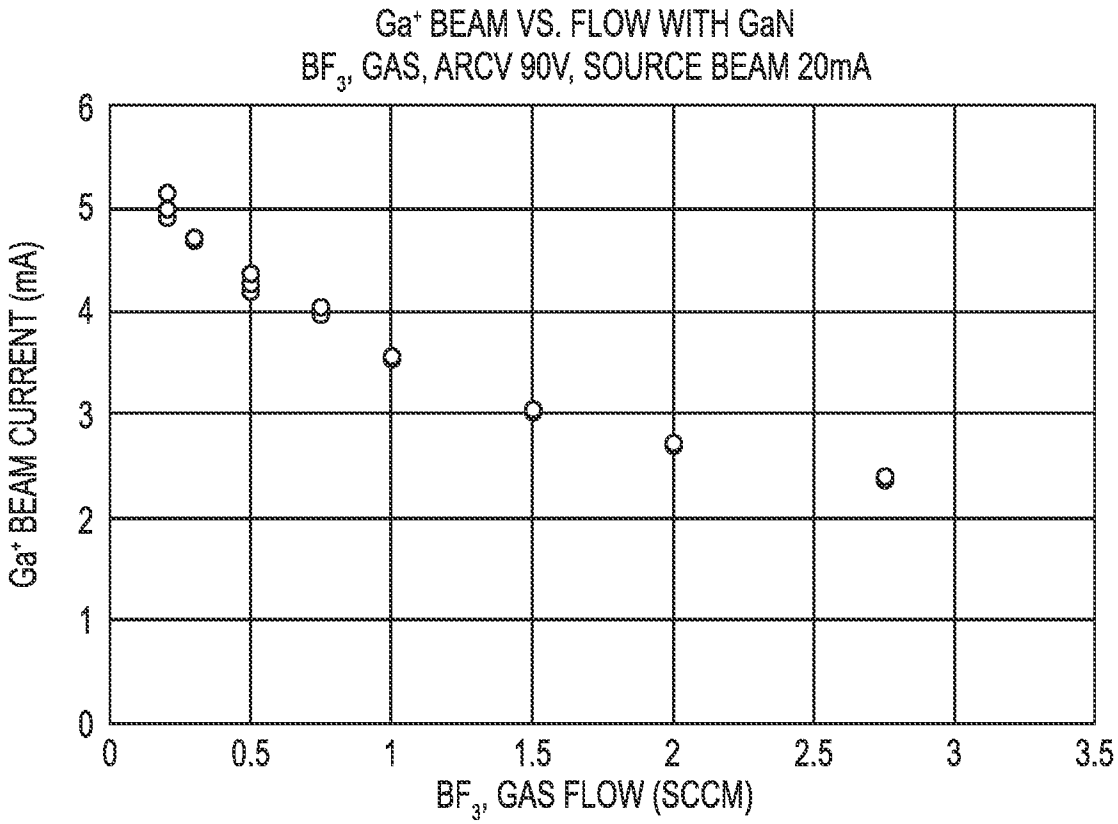
Ga+ BEAM VS. FLOW WITH GaN
BF3, GAS, ARCV 90V, SOURCE BEAM 20mA
Ga+ BEAM CURRENT (mA)
BF3, GAS FLOW (SCCM)
0
1
2
3
4
5
6
0
0.5
1
1.5
2
2.5
3
3.5

FIG. 9B

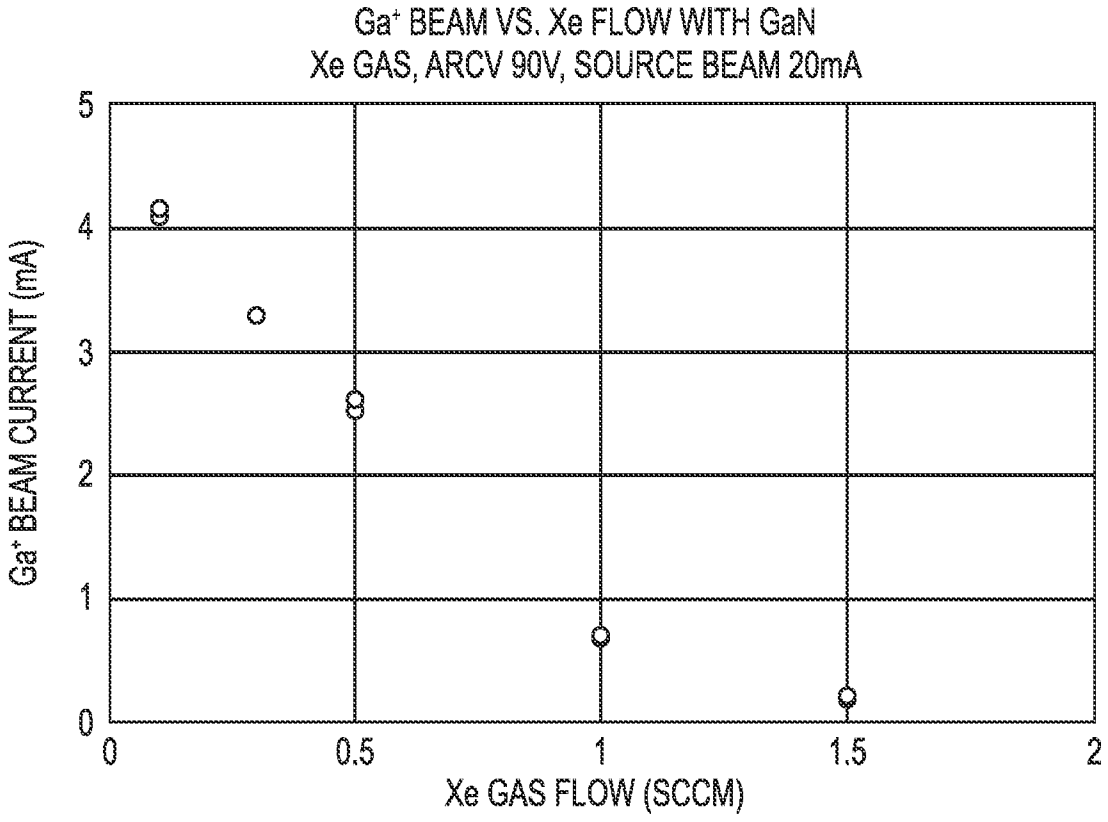
Ga+ BEAM VS. Xe FLOW WITH GaN
Xe GAS, ARCV 90V, SOURCE BEAM 20mA
Ga+ BEAM CURRENT (mA)
Xe GAS FLOW (SCCM)
0
1
2
3
4
5
0
0.5
1
1.5
2

FIG. 9C

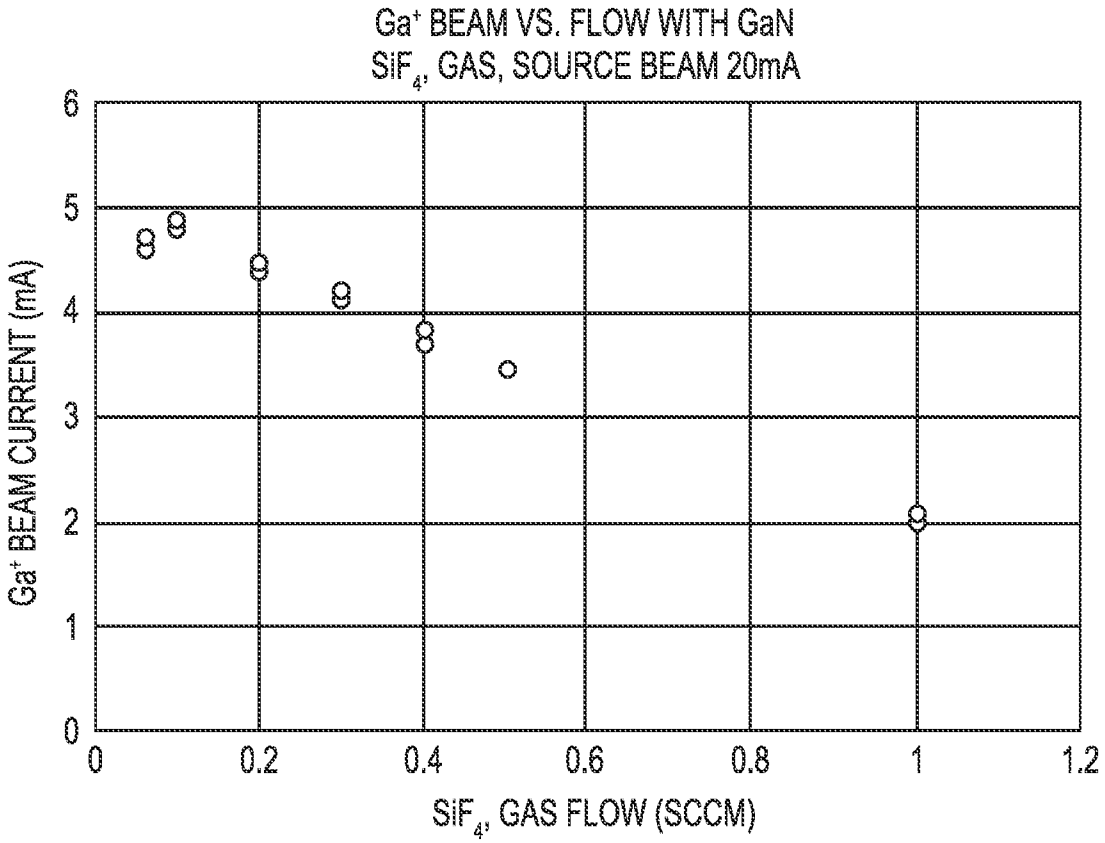

FIG. 9D

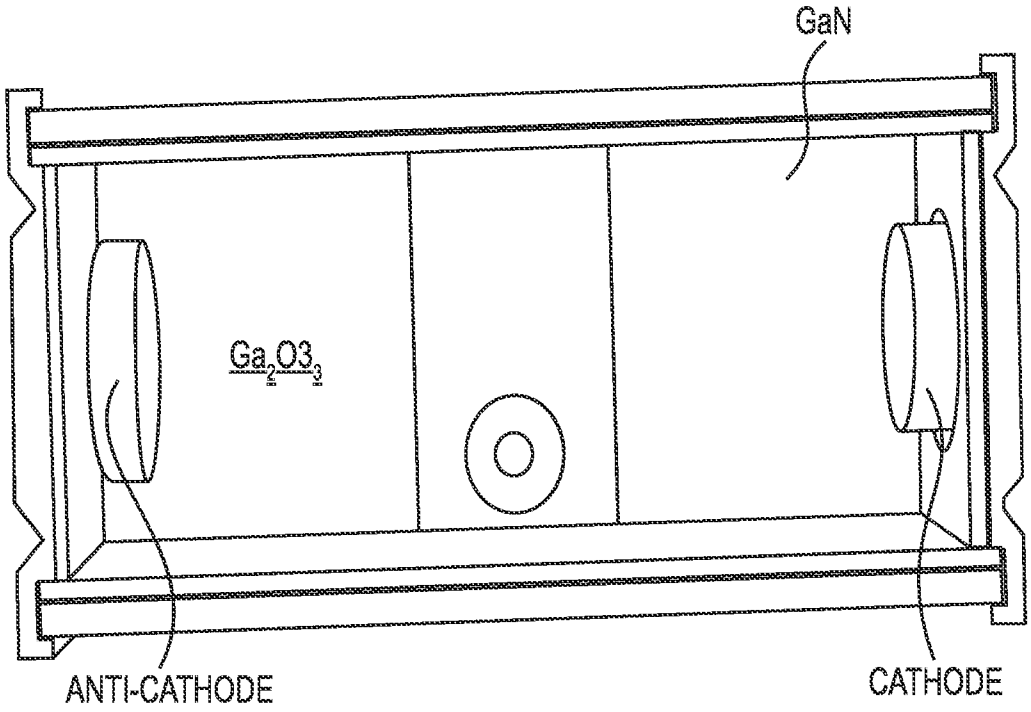

FIG. 10A

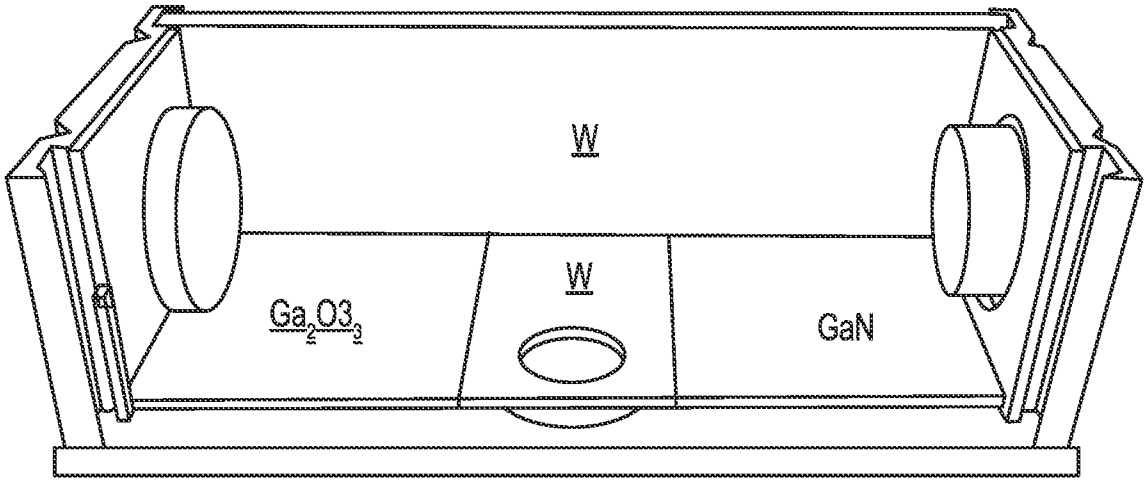

FIG. 10B

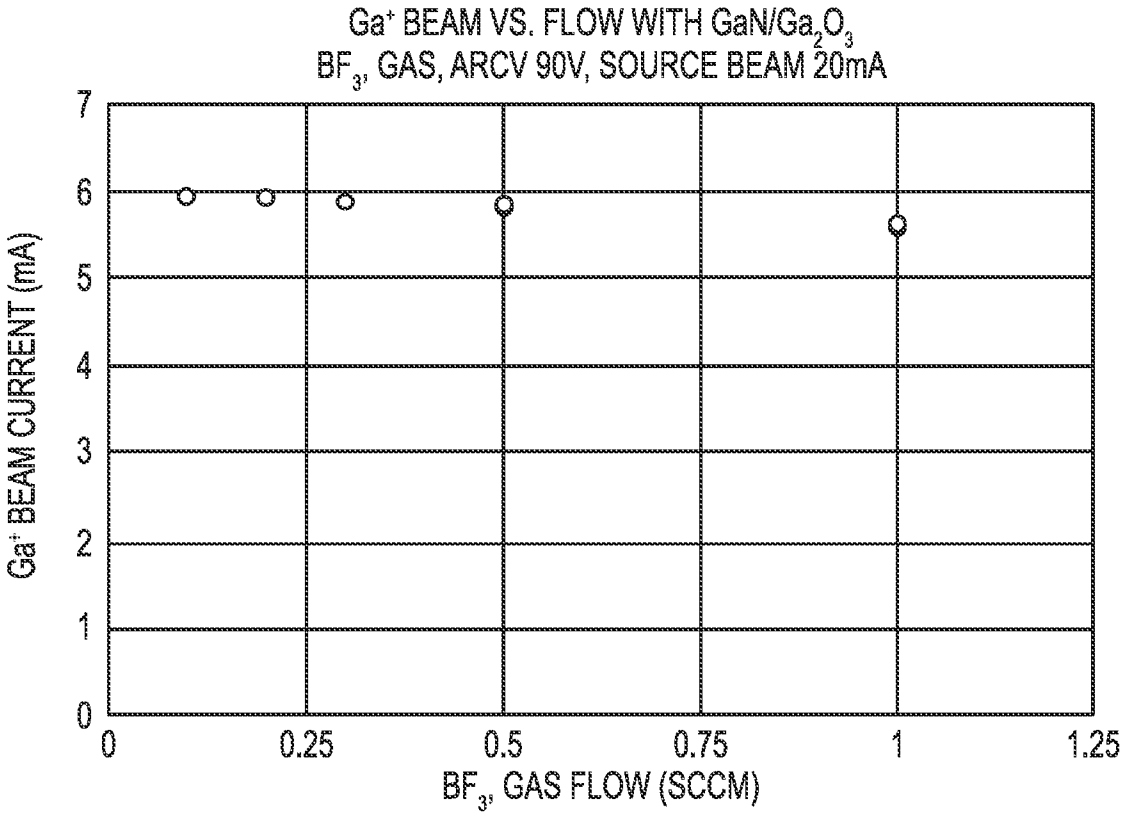

FIG. 10C

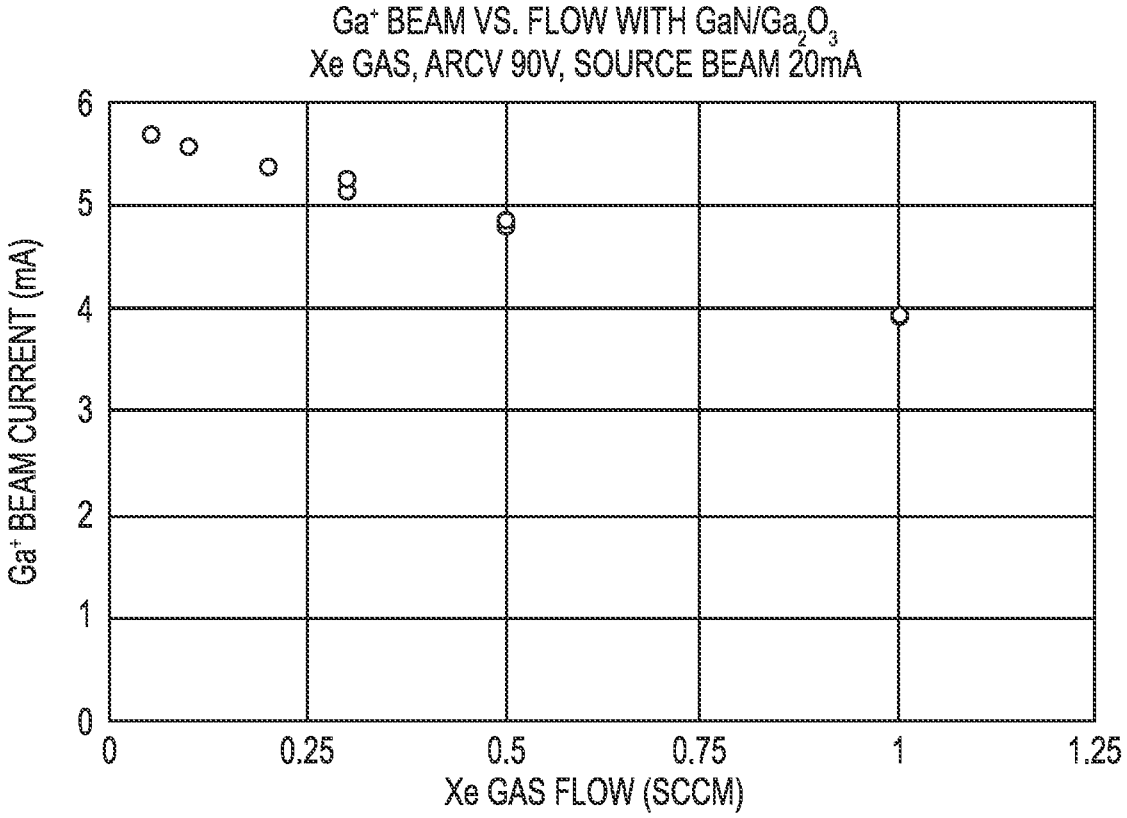
Ga+ BEAM VS. FLOW WITH GaN/Ga2O3
Xe GAS, ARCV 90V, SOURCE BEAM 20mA
Ga+ BEAM CURRENT (mA)
0
1
2
3
4
5
6
0
0.25
0.5
0.75
1
1.25
Xe GAS FLOW (SCCM)

FIG. 10D