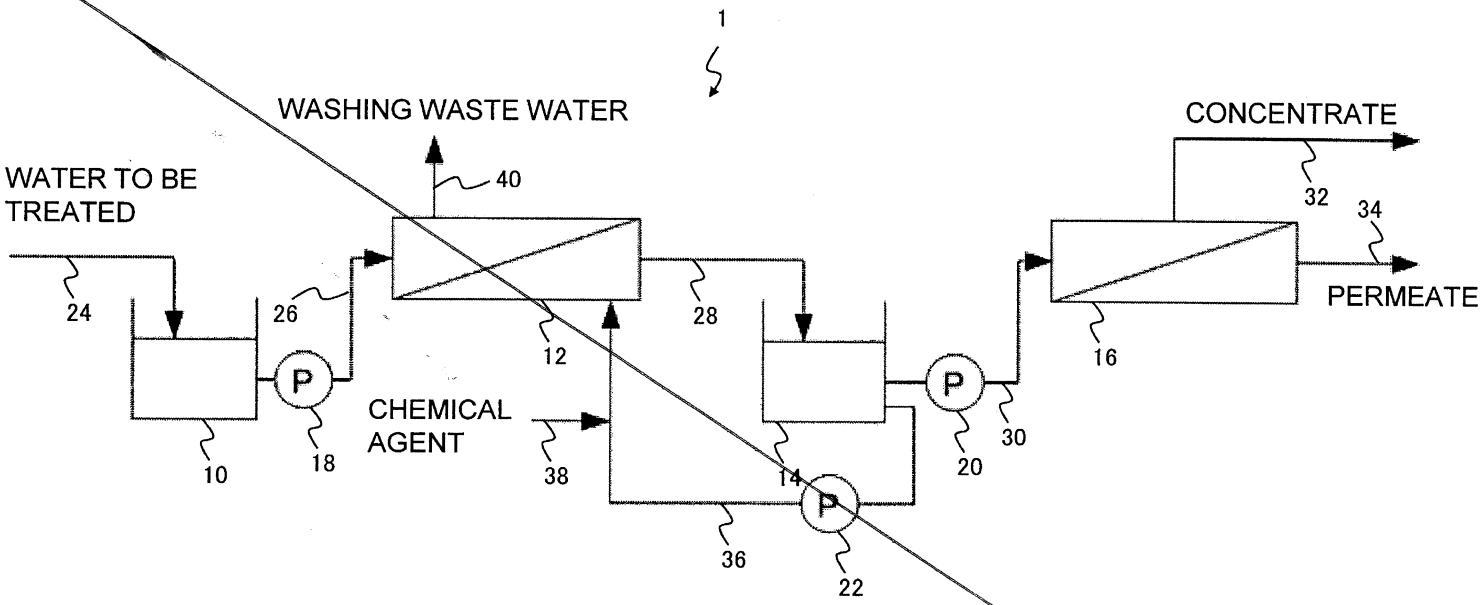
1
WASHING WASTE WATER
40
WATER TO BE TREATED
24
26
12
28
CONCENTRATE
32
34
PERMEATE
16
P
18
10
CHEMICAL AGENT
38
P
20
30
14
P
36
22

FIG. 1

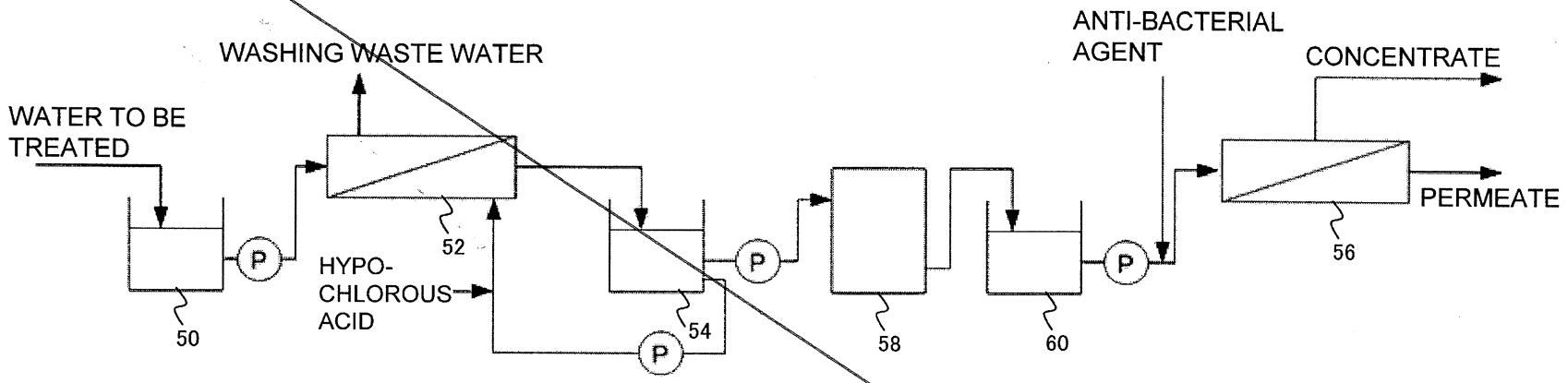
WASHING WASTE WATER
WATER TO BE TREATED
ANTI-BACTERIAL AGENT
CONCENTRATE
PERMEATE
HYPO-CHLOROUS ACID
P
50
52
54
56
58
60

FIG. 2

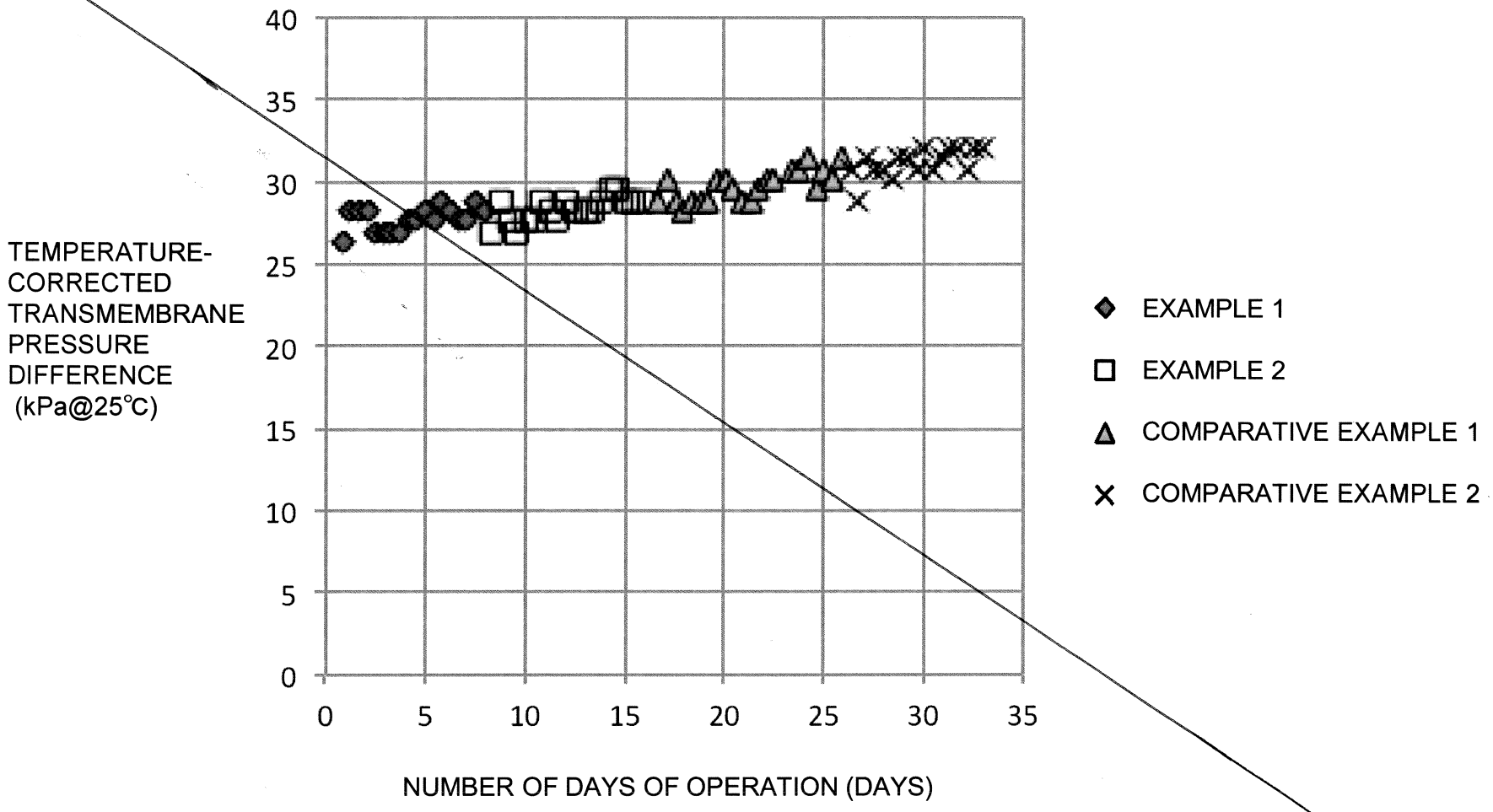
TEMPERATURE-CORRECTED TRANSMEMBRANE PRESSURE DIFFERENCE (kPa@25℃)
40
35
30
25
20
15
10
5
0
0
5
10
15
20
25
30
35
NUMBER OF DAYS OF OPERATION (DAYS)
EXAMPLE 1
EXAMPLE 2
COMPARATIVE EXAMPLE 1
COMPARATIVE EXAMPLE 2

FIG. 3

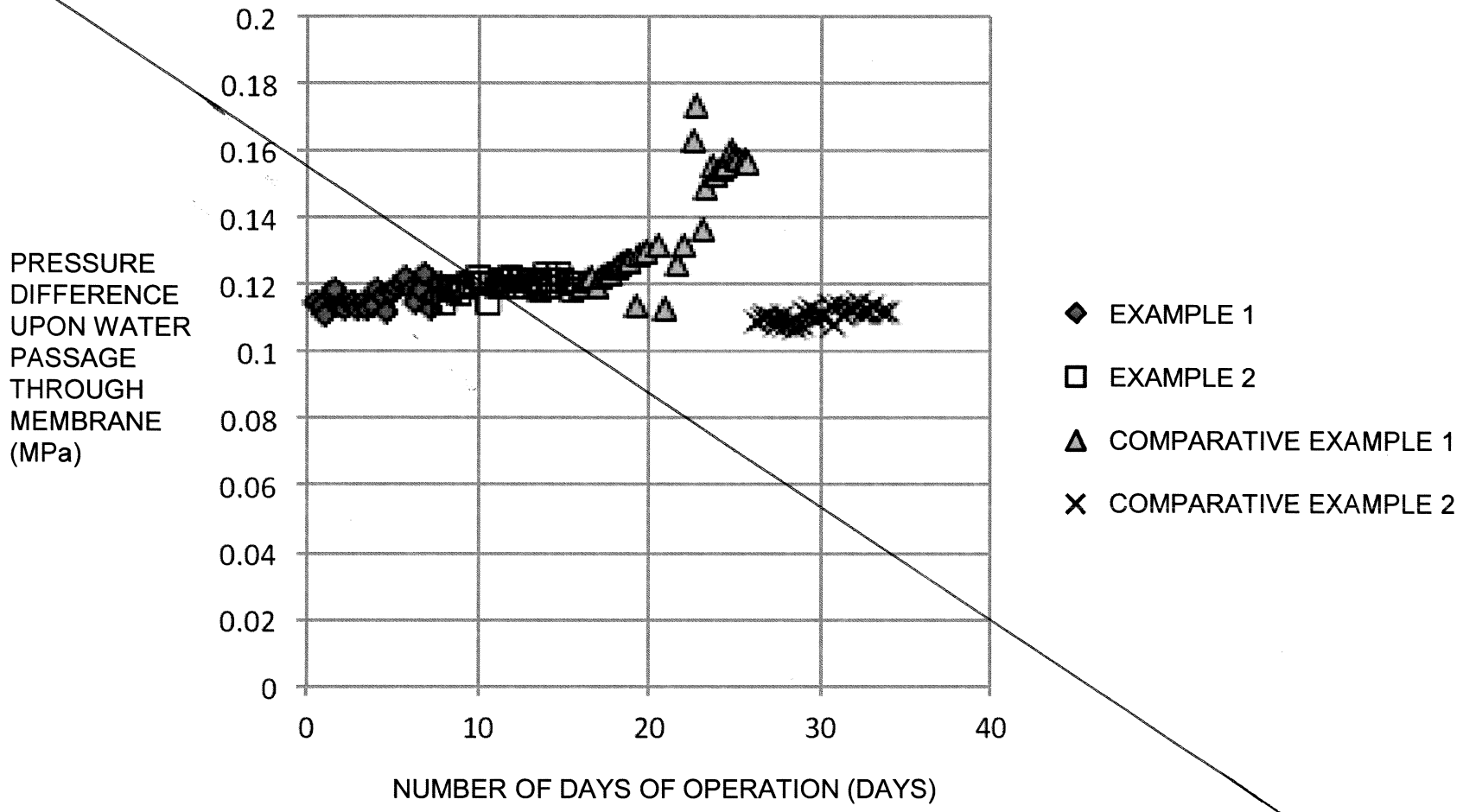
PRESSURE DIFFERENCE UPON WATER PASSAGE THROUGH MEMBRANE (MPa)
0.2
0.18
0.16
0.14
0.12
0.1
0.08
0.06
0.04
0.02
0
0
10
20
30
40
NUMBER OF DAYS OF OPERATION (DAYS)
EXAMPLE 1
EXAMPLE 2
COMPARATIVE EXAMPLE 1
COMPARATIVE EXAMPLE 2

FIG. 4

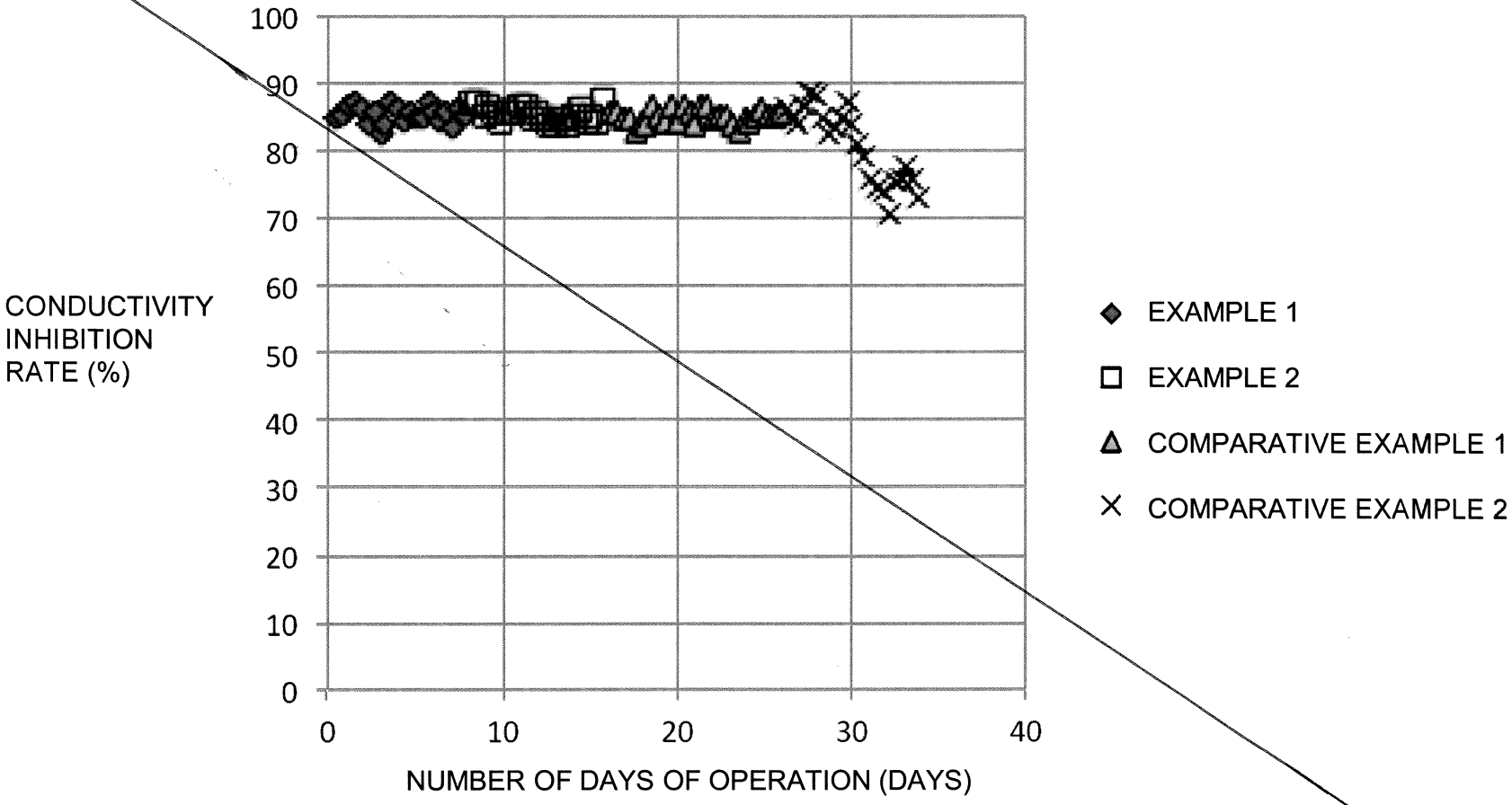
CONDUCTIVITY INHIBITION RATE (%)
100
90
80
70
60
50
40
30
20
10
0
0
10
20
30
40
NUMBER OF DAYS OF OPERATION (DAYS)
EXAMPLE 1
EXAMPLE 2
COMPARATIVE EXAMPLE 1
COMPARATIVE EXAMPLE 2

FIG. 5

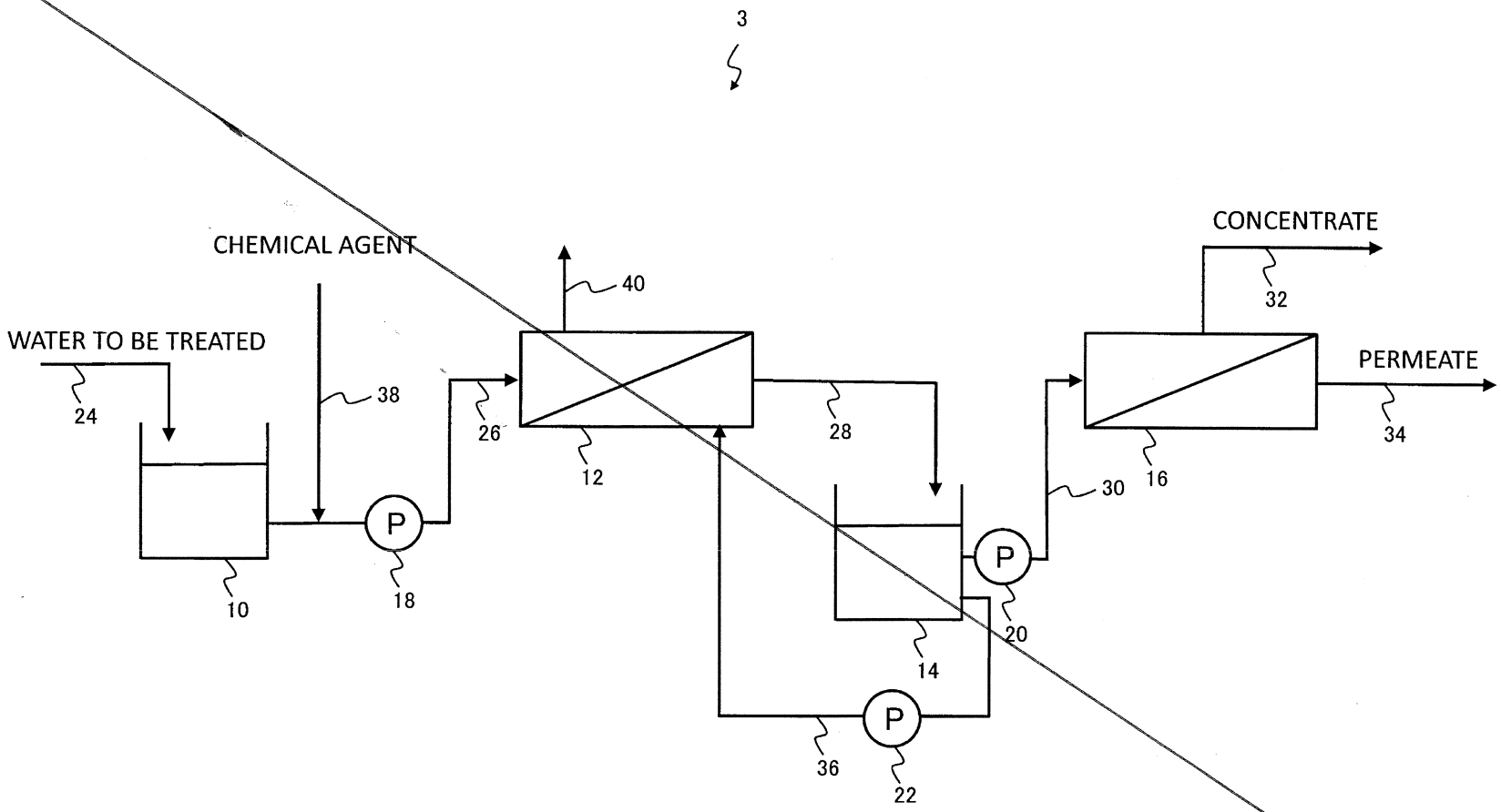
3
CHEMICAL AGENT
CONCENTRATE
40
32
WATER TO BE TREATED
PERMEATE
24
38
26
28
34
12
30
16
P
P
10
18
20
14
P
36
22

FIG. 6

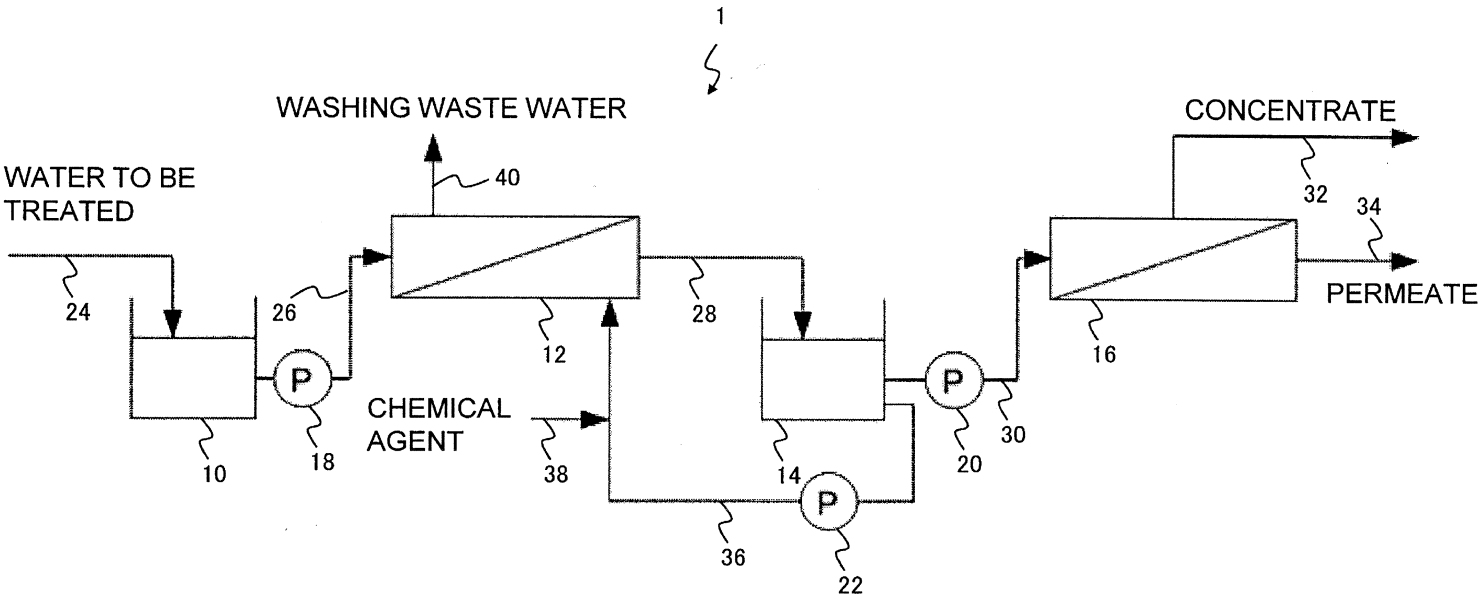
1
WASHING WASTE WATER
40
WATER TO BE TREATED
24
26
12
28
CONCENTRATE
32
34
PERMEATE
16
P
P
P
10
18
CHEMICAL AGENT
38
14
20
30
36
22

FIG. 1

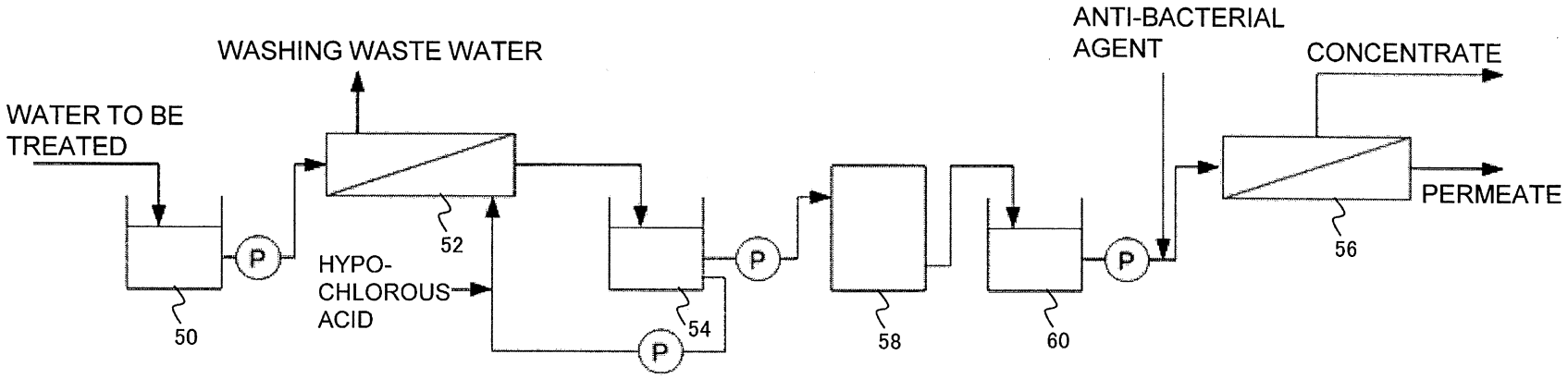
WASHING WASTE WATER
ANTI-BACTERIAL AGENT
CONCENTRATE
WATER TO BE TREATED
PERMEATE
HYPO-CHLOROUS ACID
P
50
52
54
56
58
60

FIG. 2

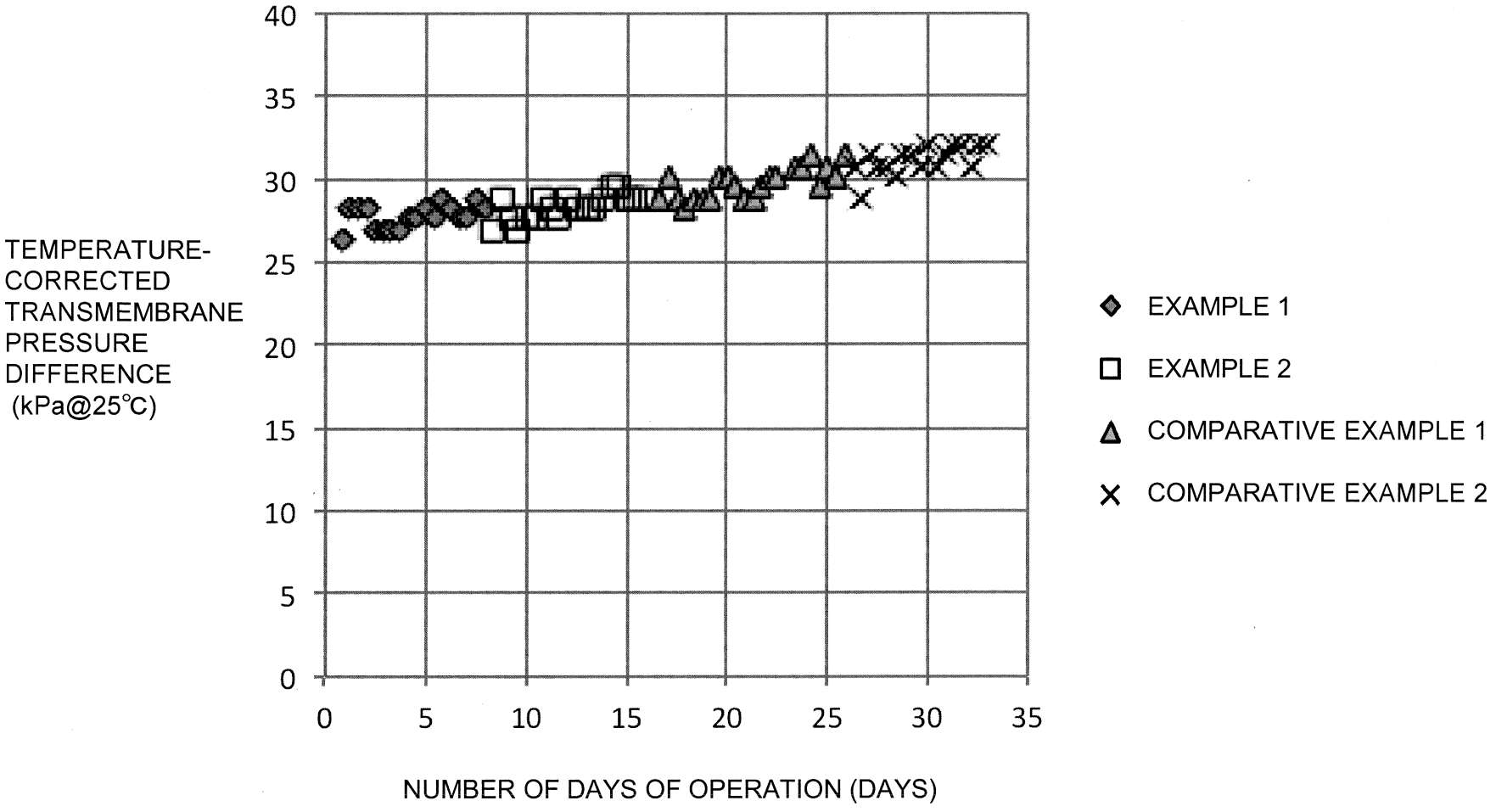
TEMPERATURE-CORRECTED TRANSMEMBRANE PRESSURE DIFFERENCE (kPa@25℃)
40
35
30
25
20
15
10
5
0
0
5
10
15
20
25
30
35
NUMBER OF DAYS OF OPERATION (DAYS)
EXAMPLE 1
EXAMPLE 2
COMPARATIVE EXAMPLE 1
COMPARATIVE EXAMPLE 2

FIG. 3

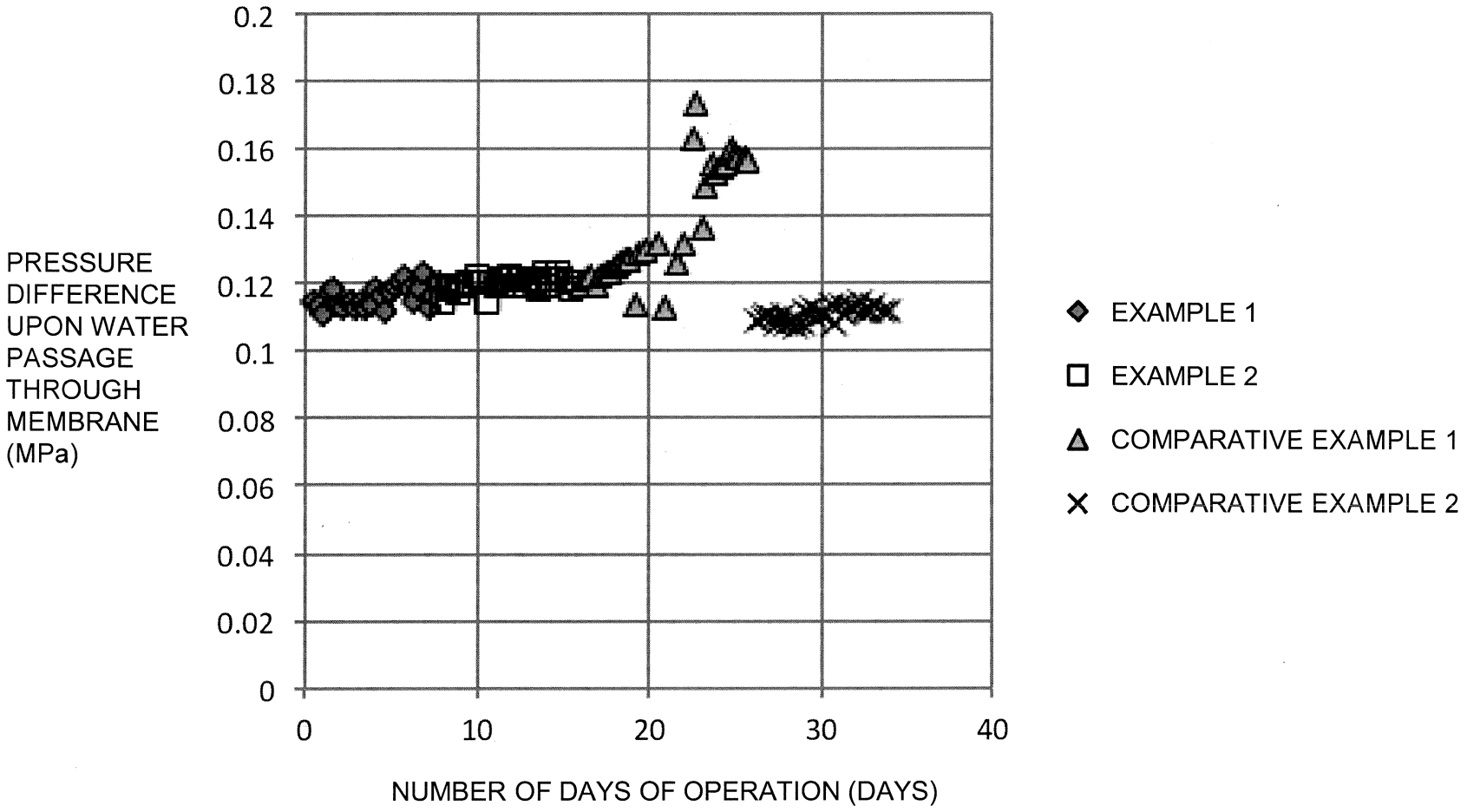
PRESSURE DIFFERENCE UPON WATER PASSAGE THROUGH MEMBRANE (MPa)
0.2
0.18
0.16
0.14
0.12
0.1
0.08
0.06
0.04
0.02
0
0
10
20
30
40
NUMBER OF DAYS OF OPERATION (DAYS)
EXAMPLE 1
EXAMPLE 2
COMPARATIVE EXAMPLE 1
COMPARATIVE EXAMPLE 2

FIG. 4

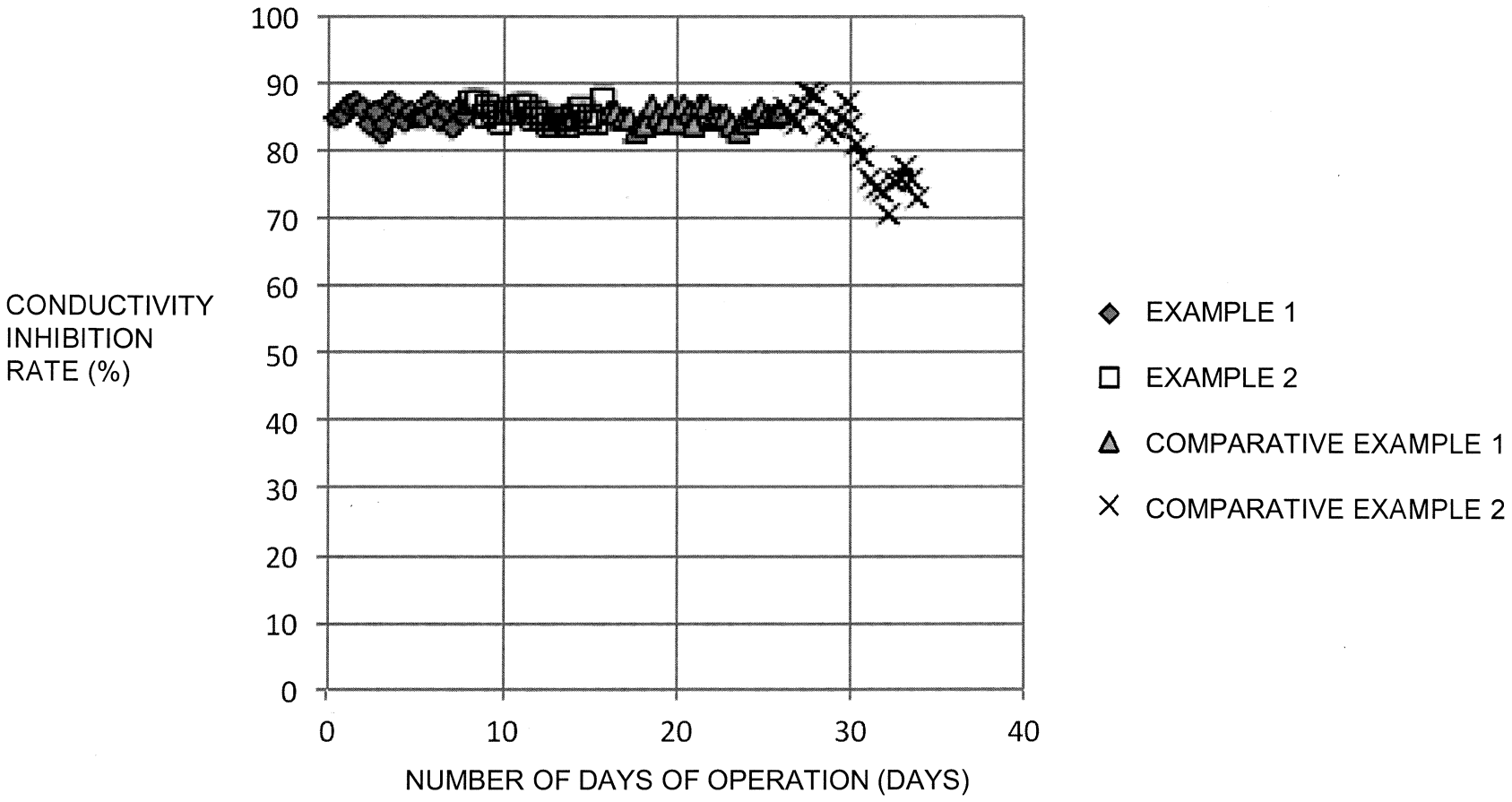
CONDUCTIVITY INHIBITION RATE (%)
100
90
80
70
60
50
40
30
20
10
0
0
10
20
30
40
NUMBER OF DAYS OF OPERATION (DAYS)
EXAMPLE 1
EXAMPLE 2
COMPARATIVE EXAMPLE 1
COMPARATIVE EXAMPLE 2

FIG. 5

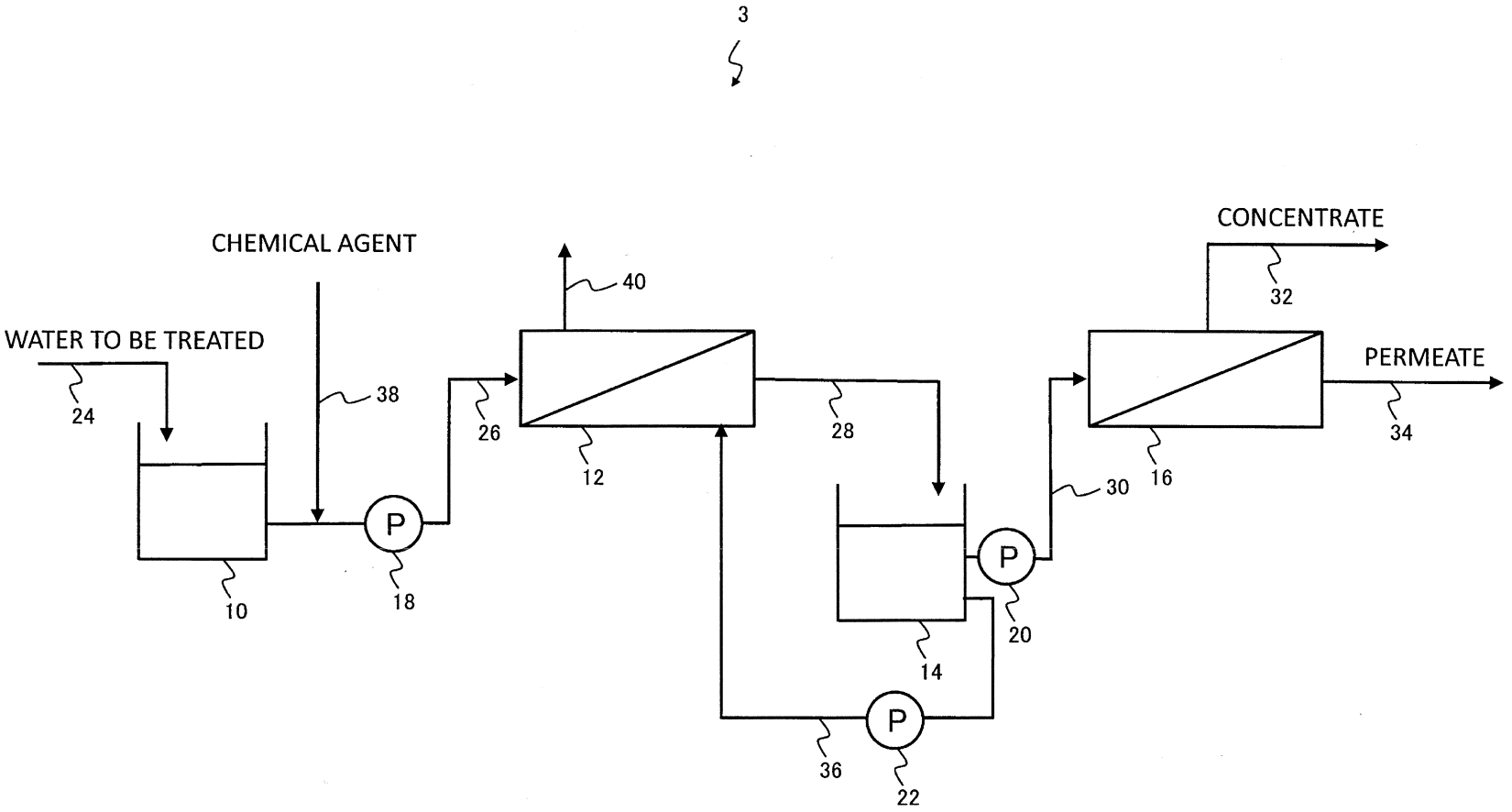
3
CHEMICAL AGENT
WATER TO BE TREATED
CONCENTRATE
PERMEATE
40
38
24
26
12
28
32
34
16
30
P
P
P
10
18
14
20
36
22

FIG. 6