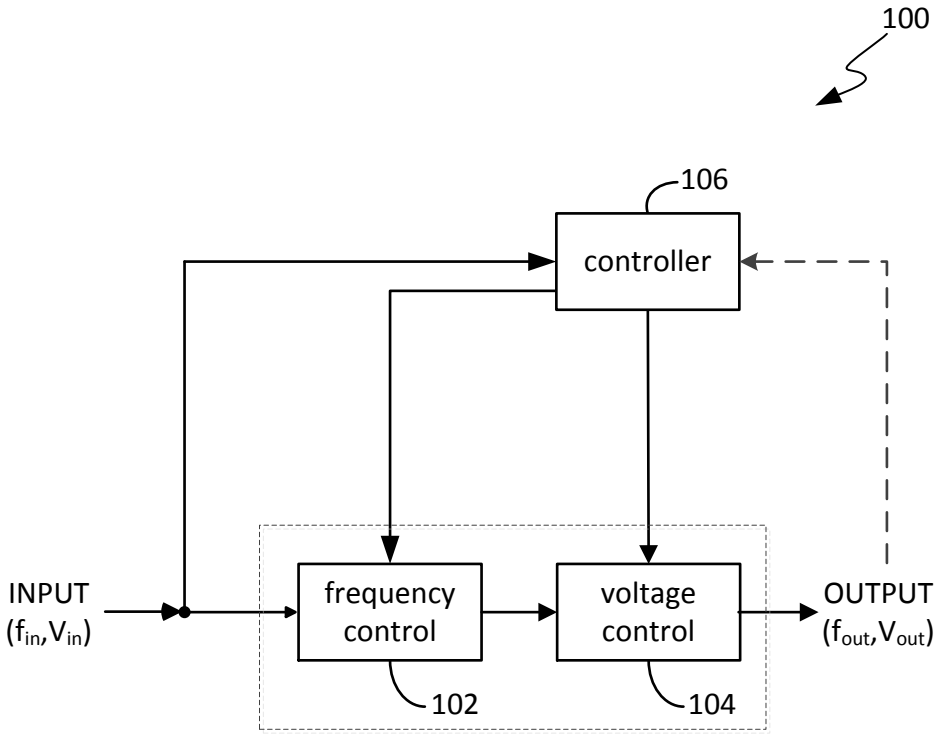

Figure 1

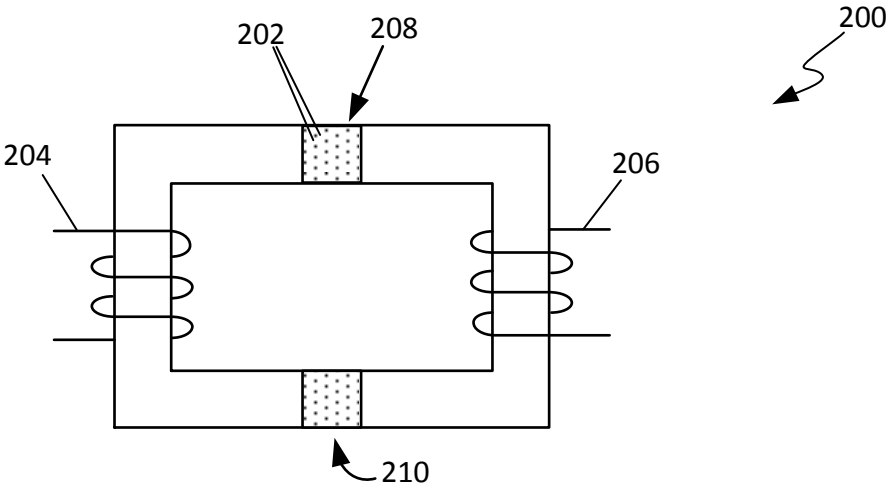

Figure 2

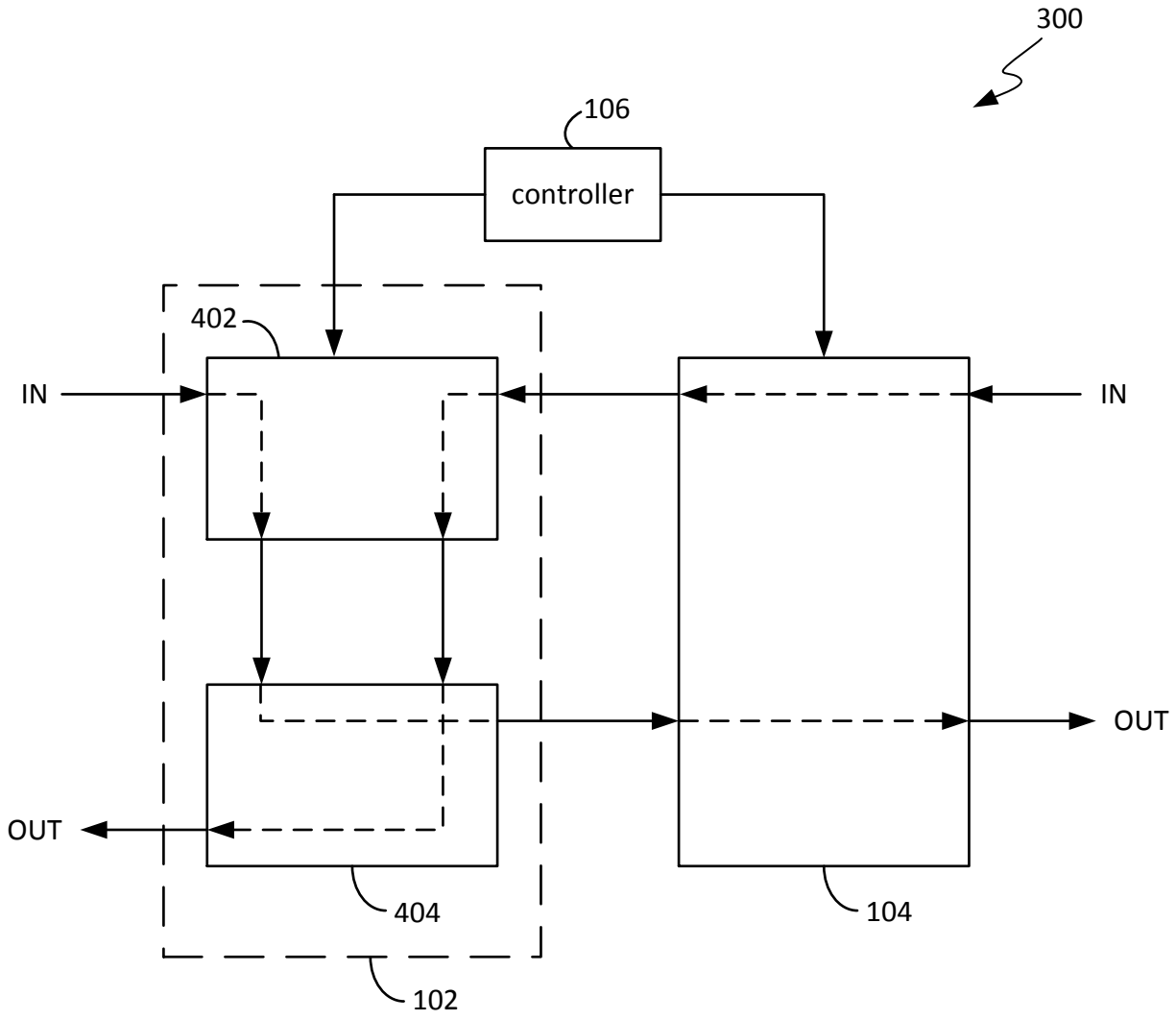

Figure 3

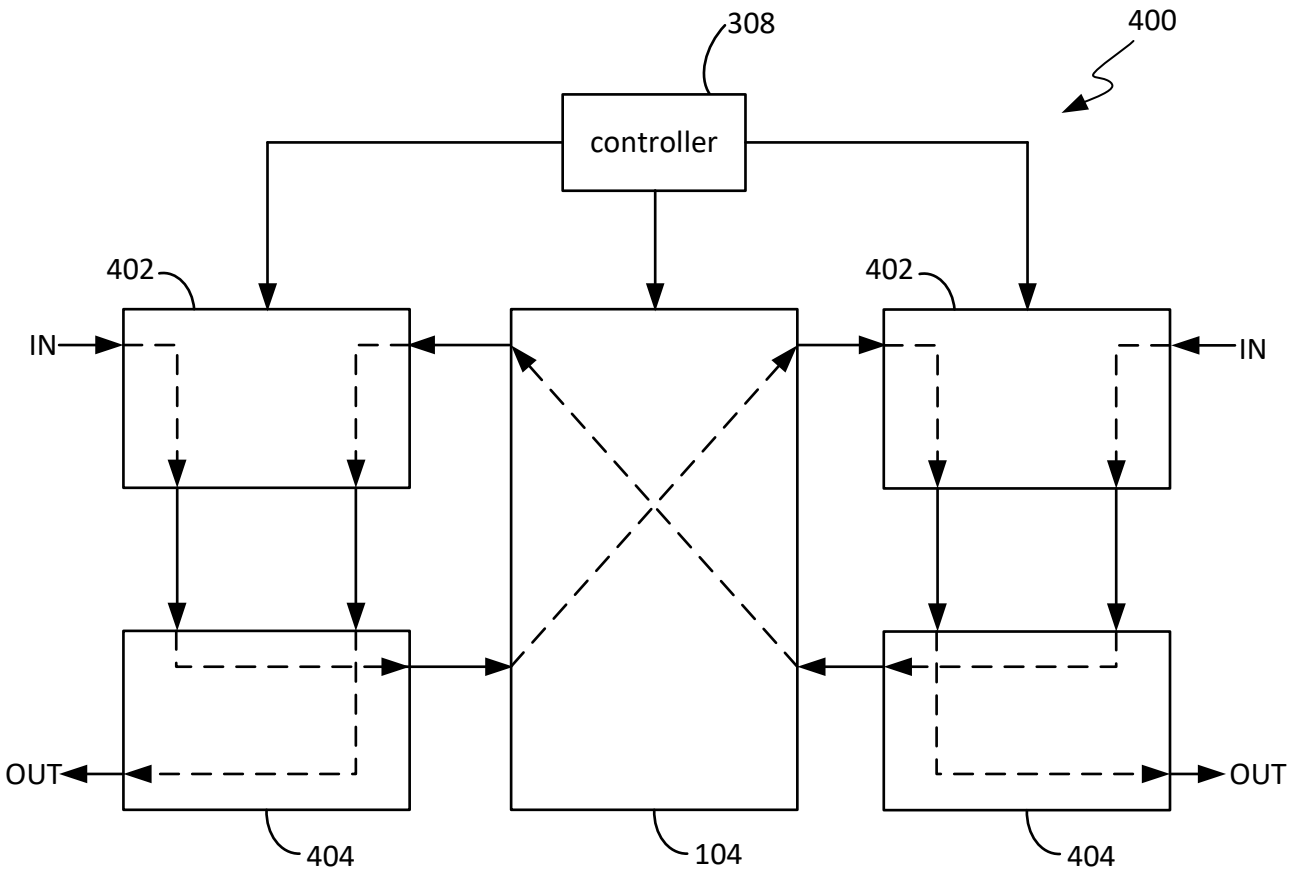

Figure 4

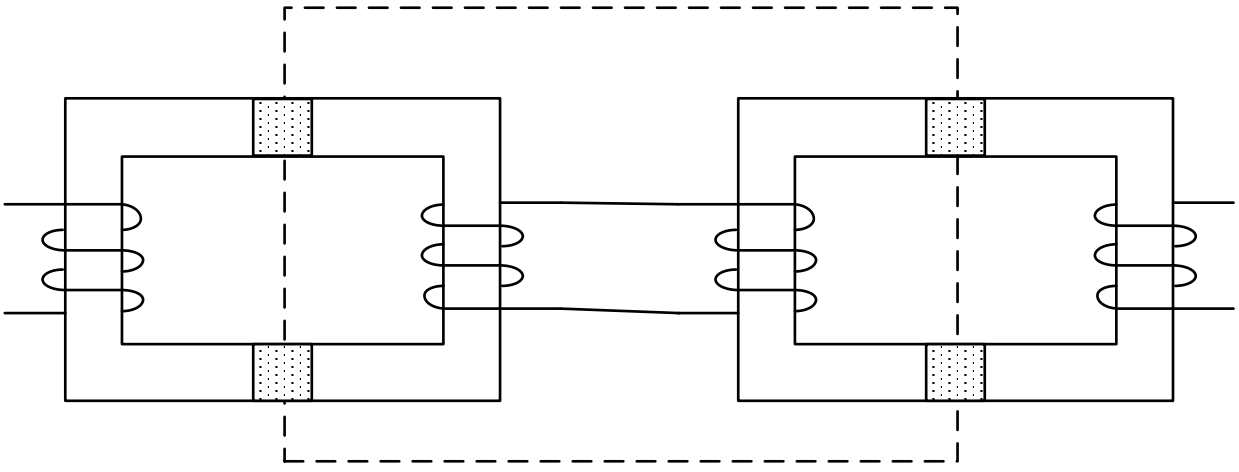

Figure 5

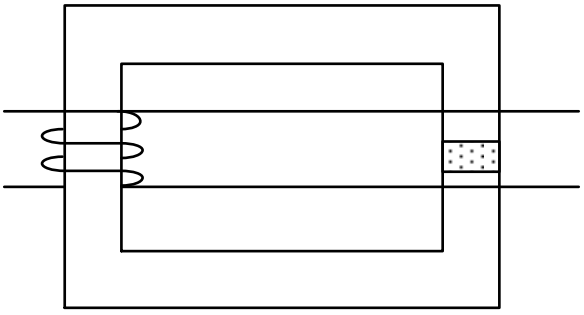

Figure 6

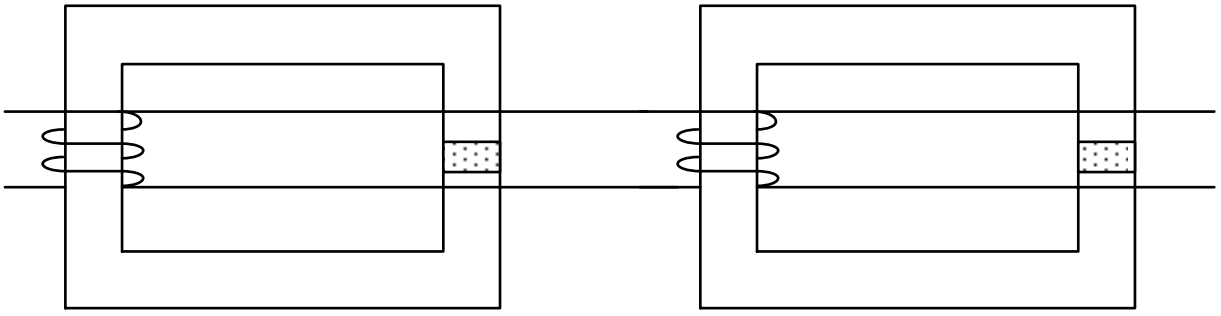

Figure 7

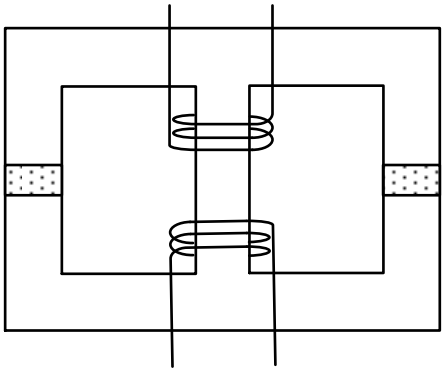

Figure 8

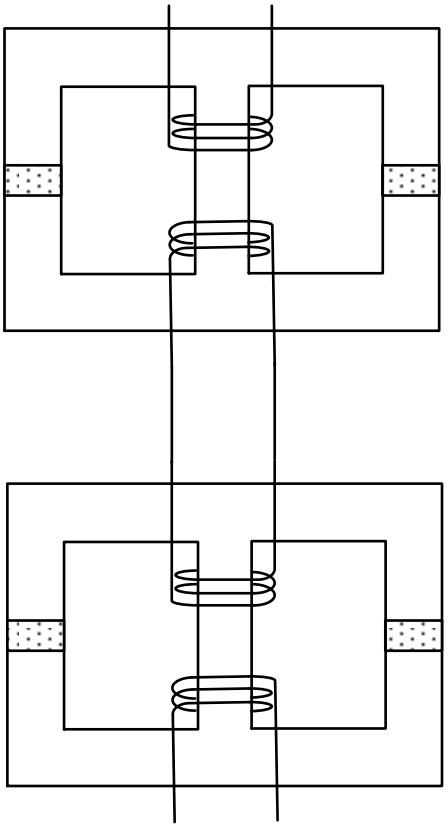

Figure 9

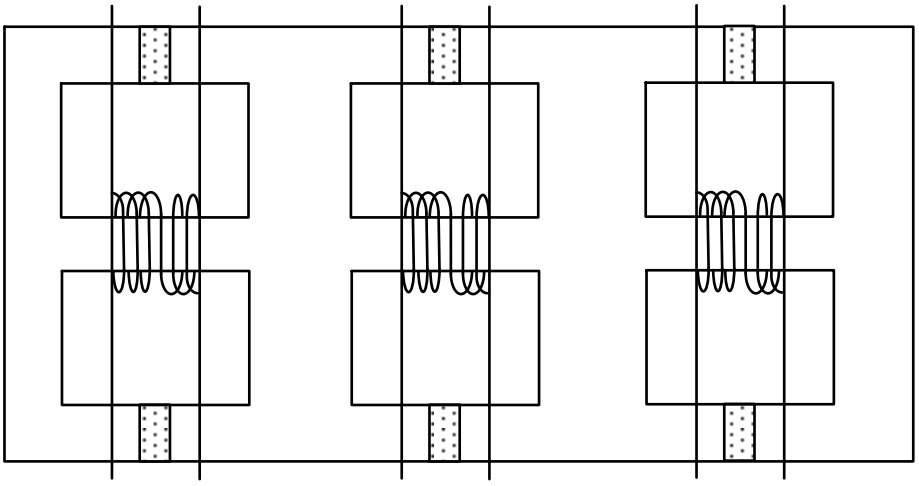

Figure 10

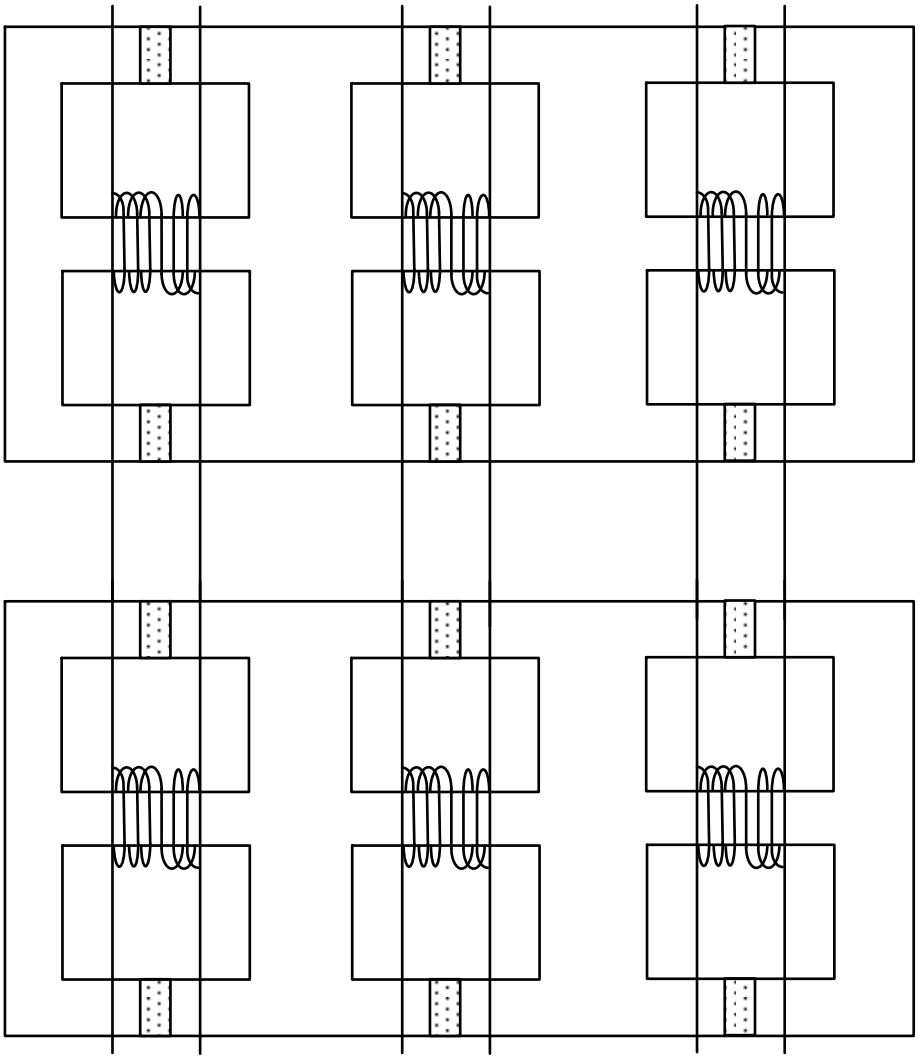

Figure 11

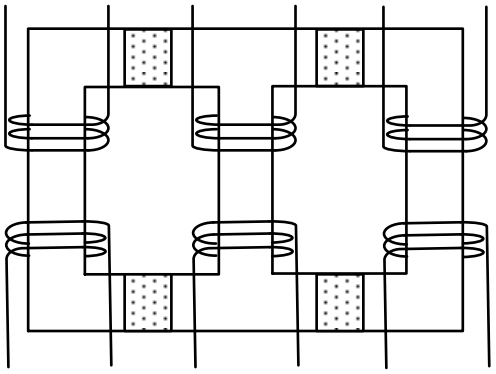

Figure 12

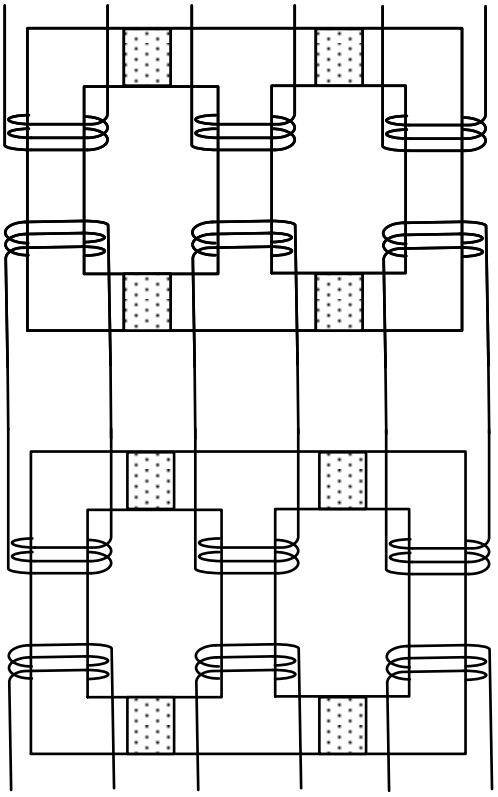

Figure 13

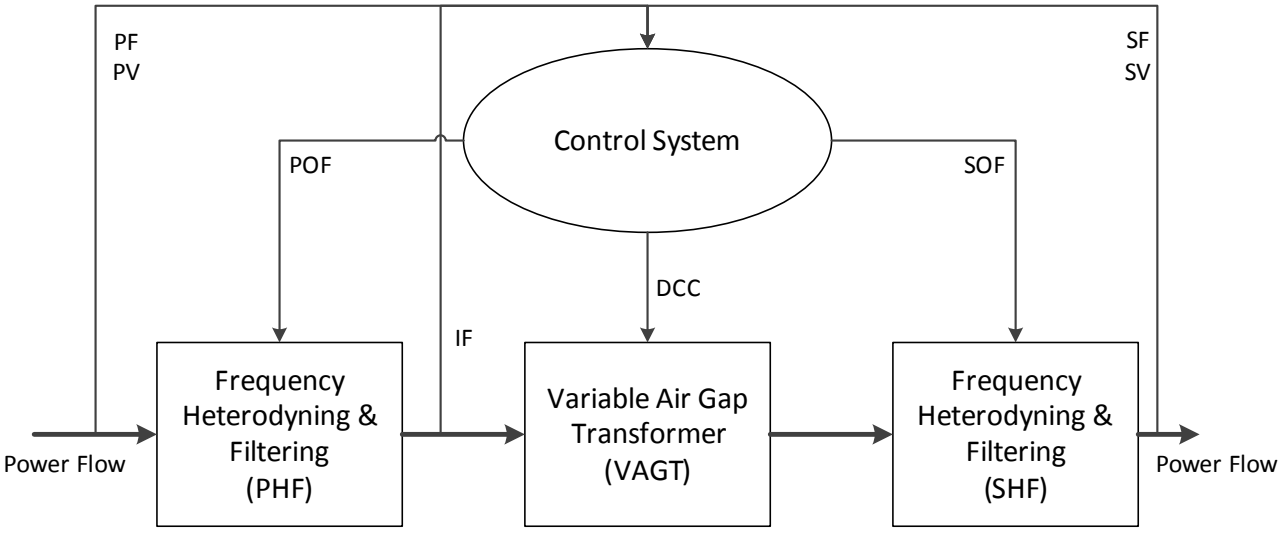
PF
PV
SF
SV
Control System
POF
SOF
DCC
IF
Frequency Heterodyning & Filtering (PHF)
Variable Air Gap Transformer (VAGT)
Frequency Heterodyning & Filtering (SHF)
Power Flow
Power Flow

Figure 14

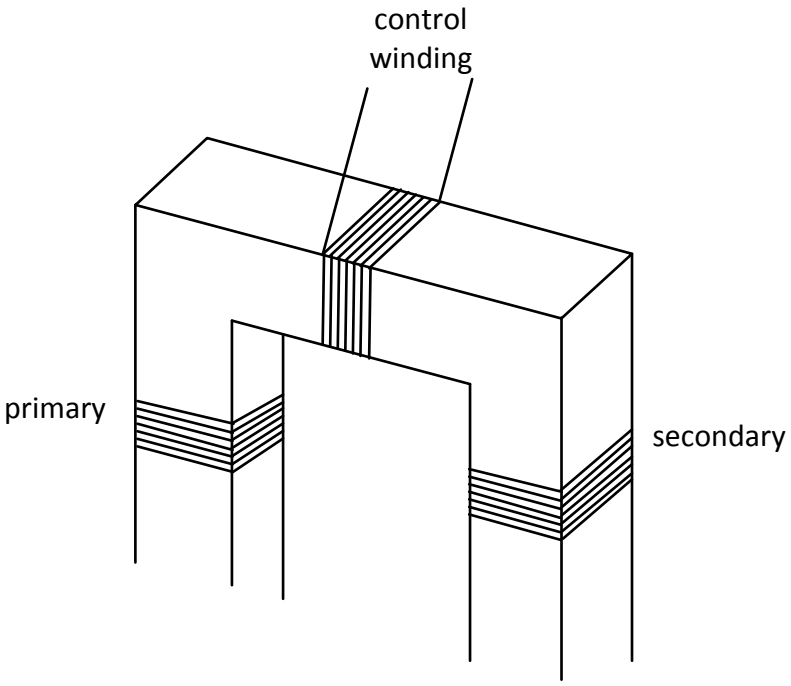

Figure 15

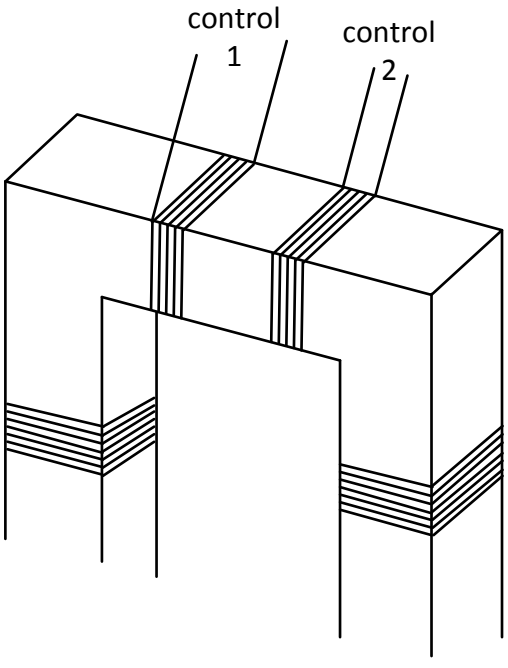

Figure 16

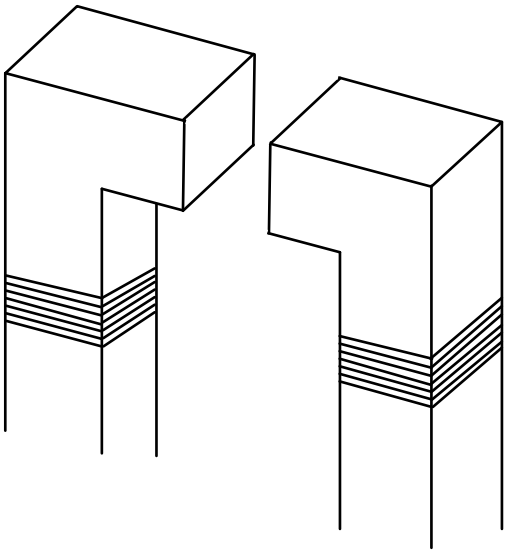

Figure 17

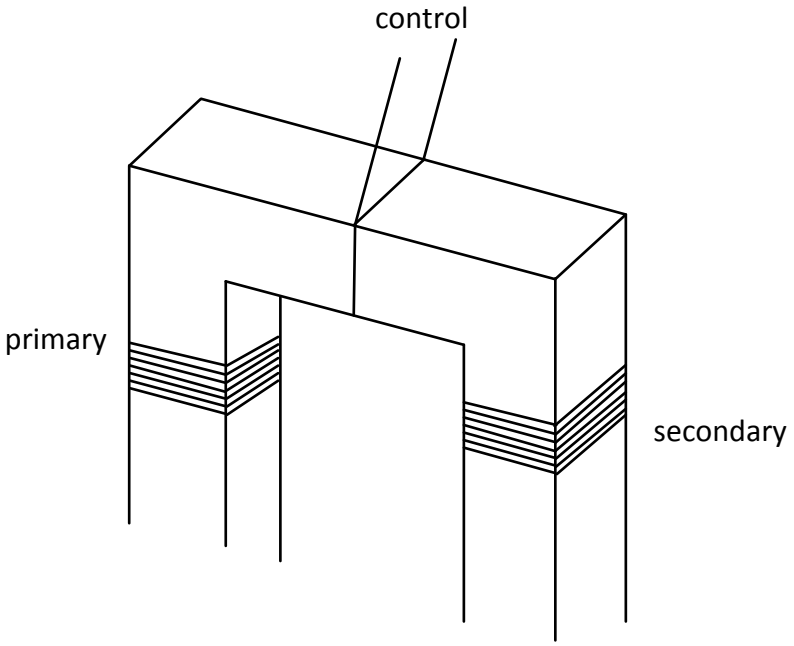

Figure 18

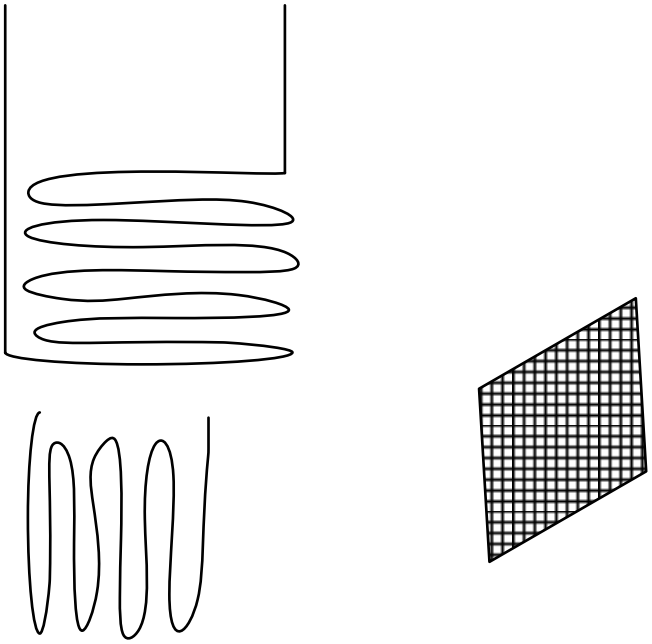

Figure 19

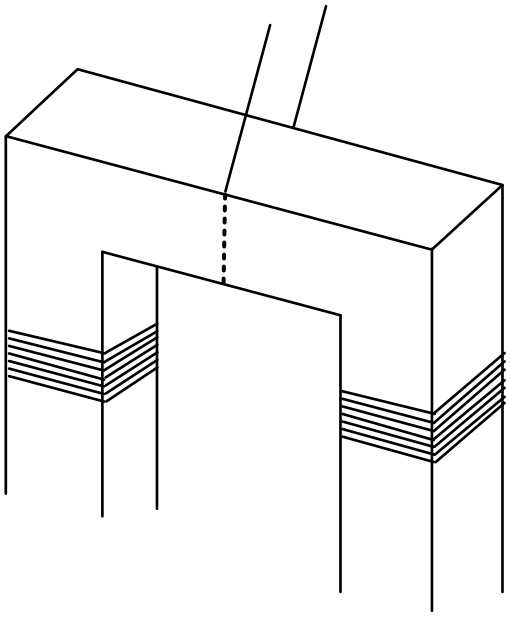

Figure 20

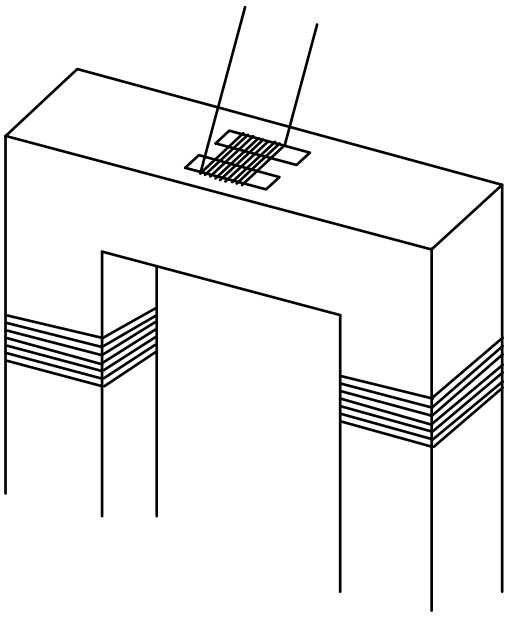

Figure 21

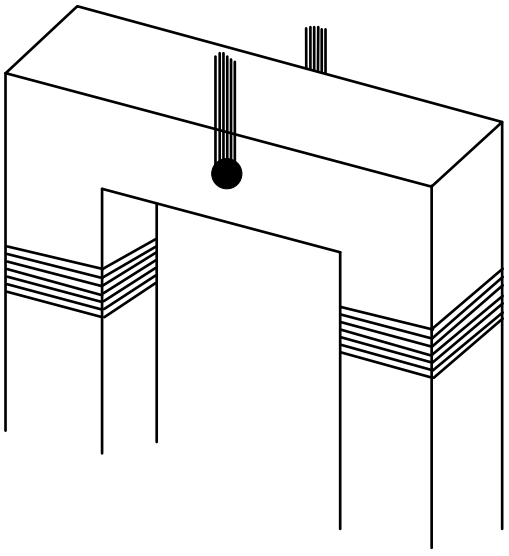

Figure 22

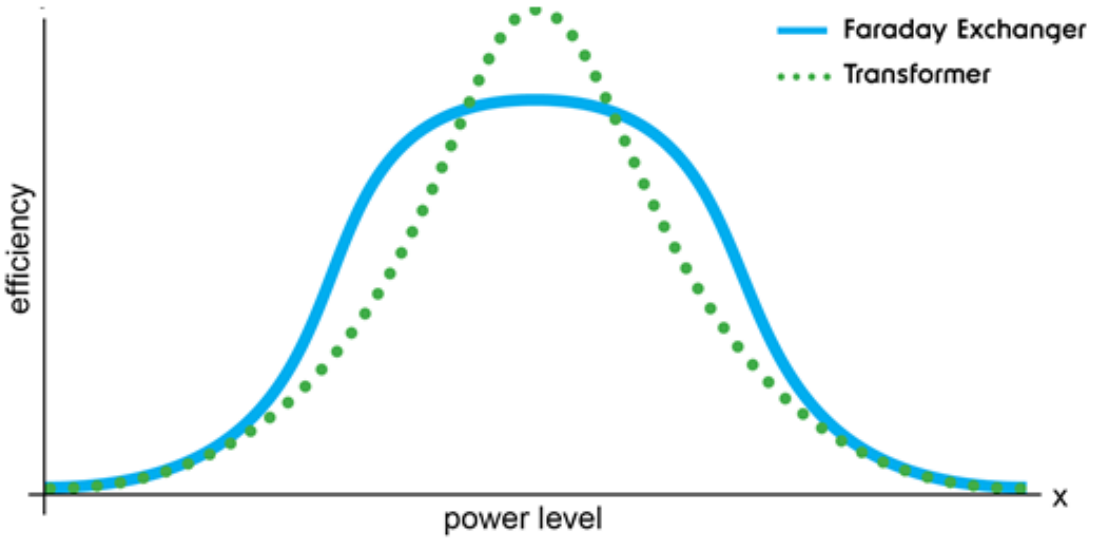

Figure 23

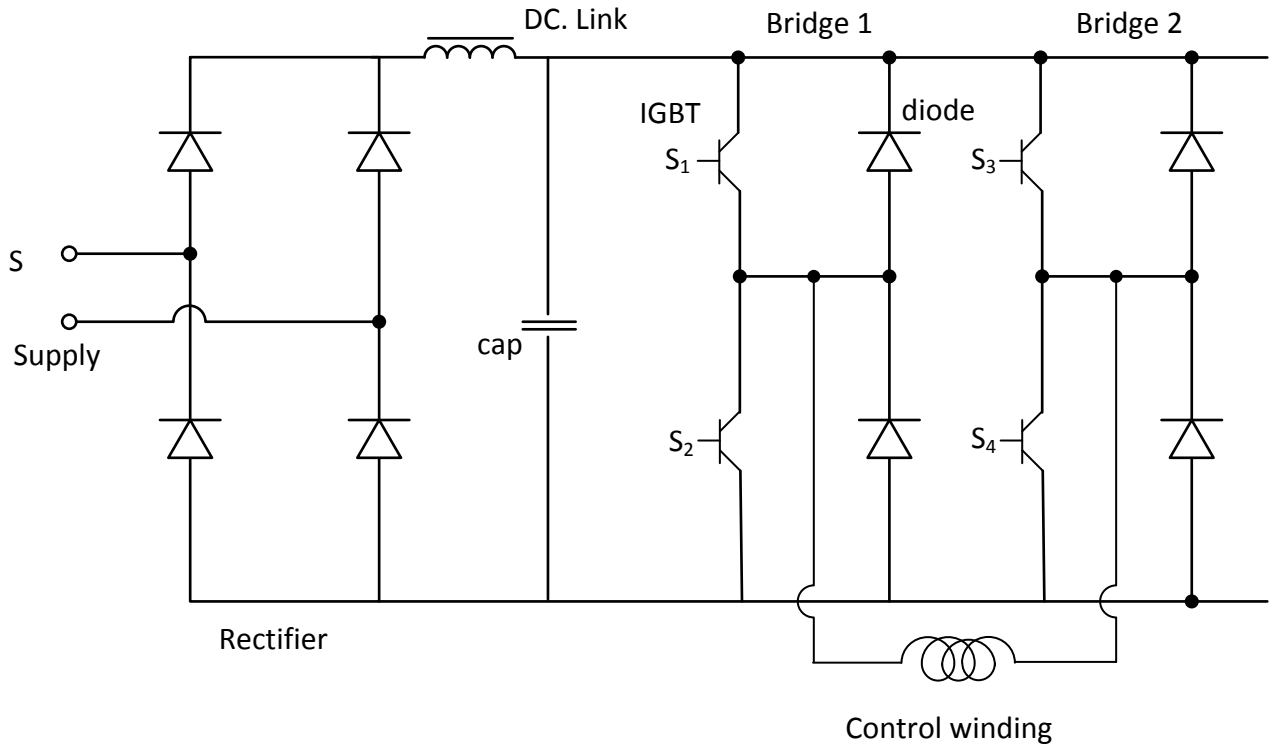
DC. Link
Bridge 1
Bridge 2
IGBT
diode
S1
S3
S
Supply
cap
S2
S4
Rectifier
Control winding

Figure 24

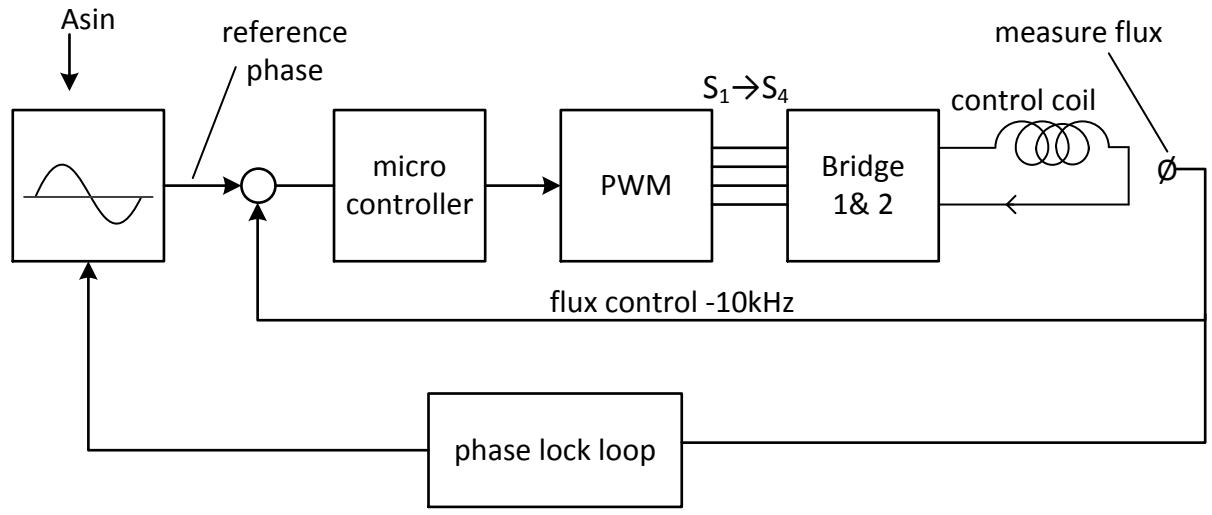

Figure 25

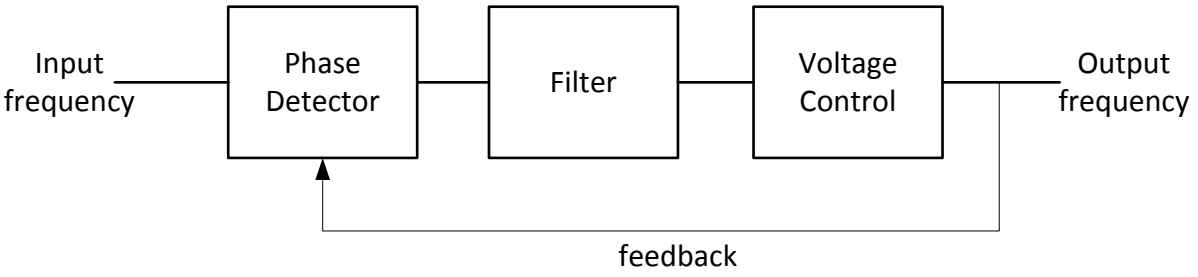

Figure 26

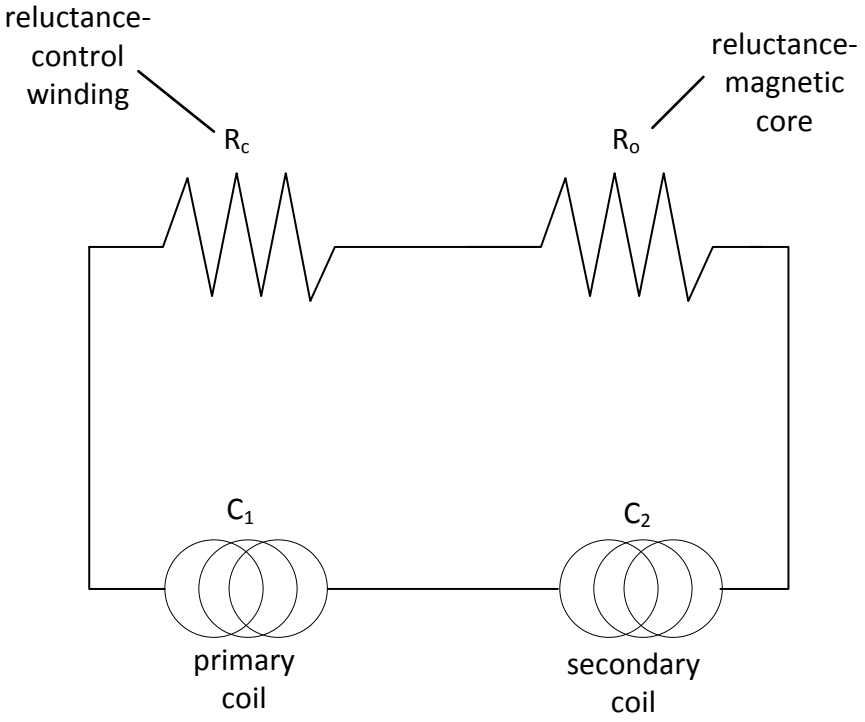

Figure 27

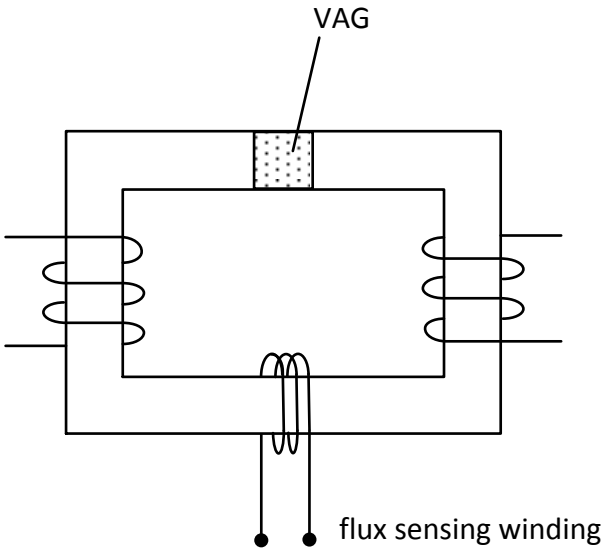

Figure 28

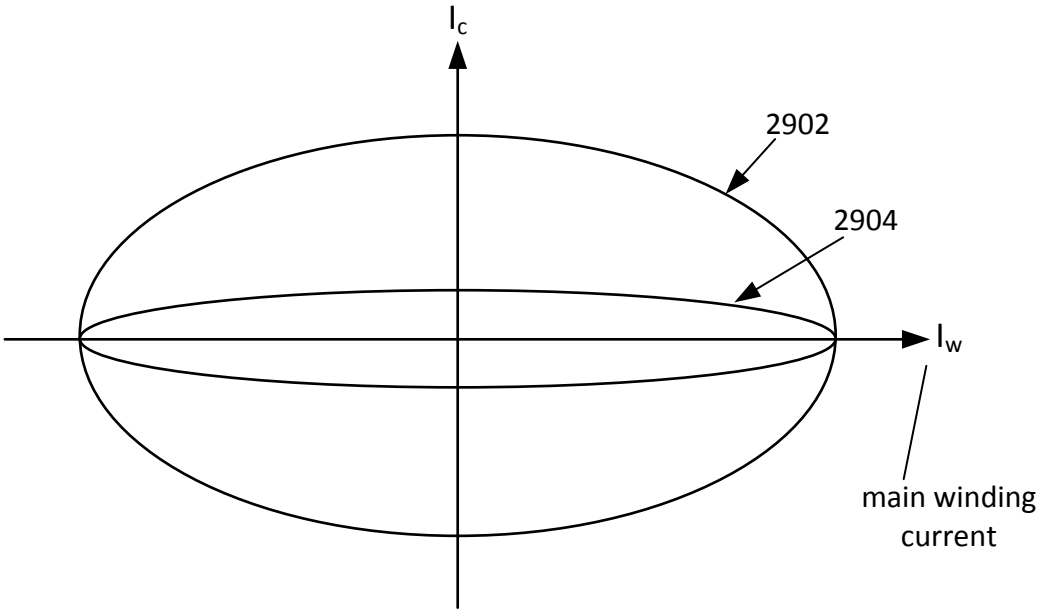

Figure 29

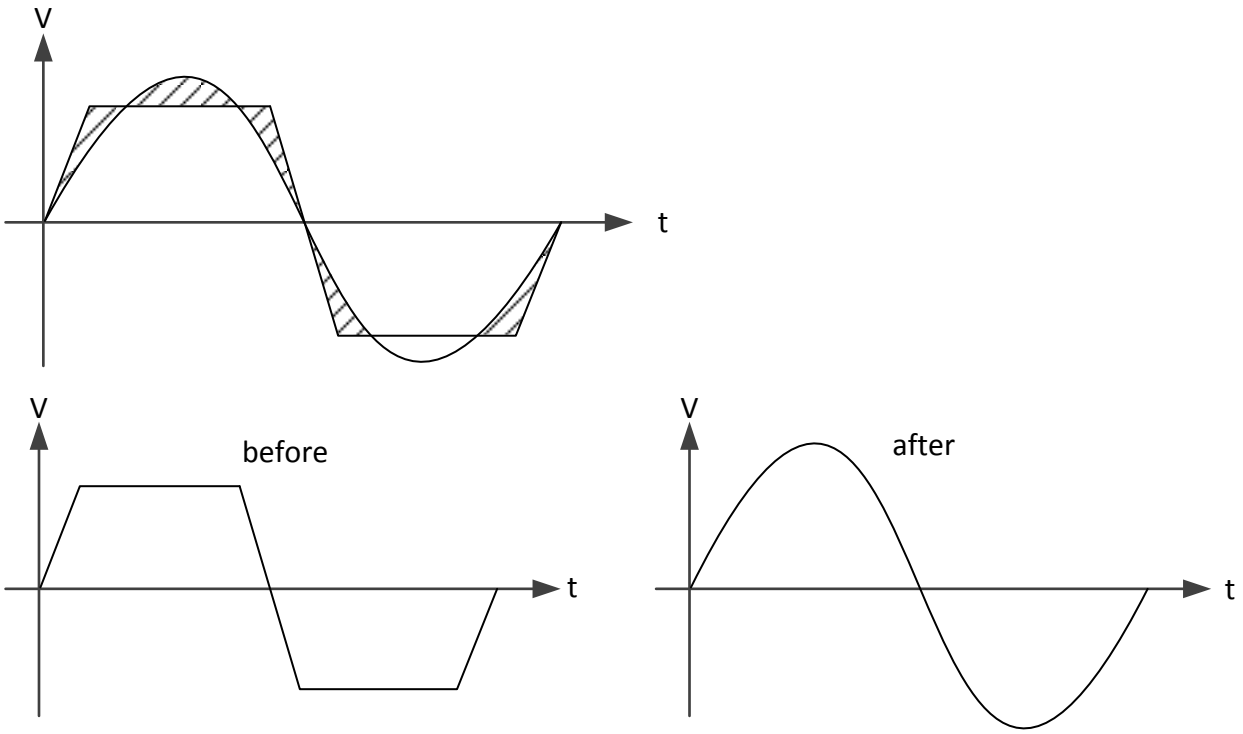

Figure 30

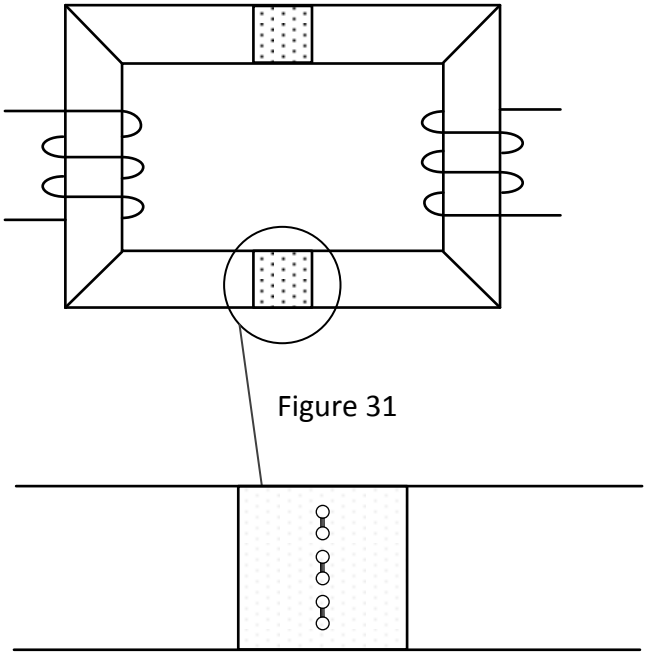

Figure 31

Figure 32

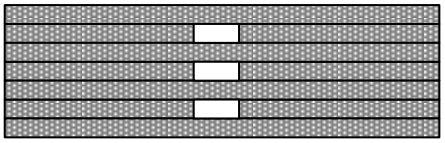

Figure 33

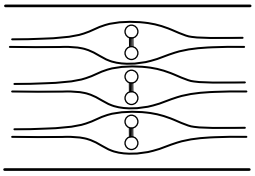

Figure 34

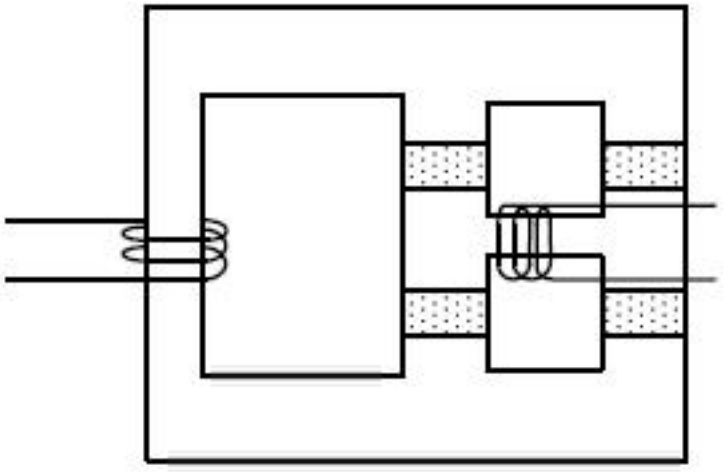

Figure 35

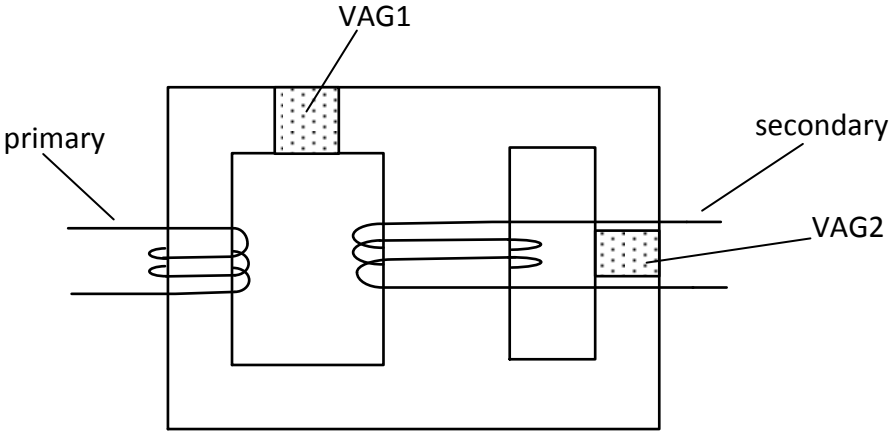

Figure 36