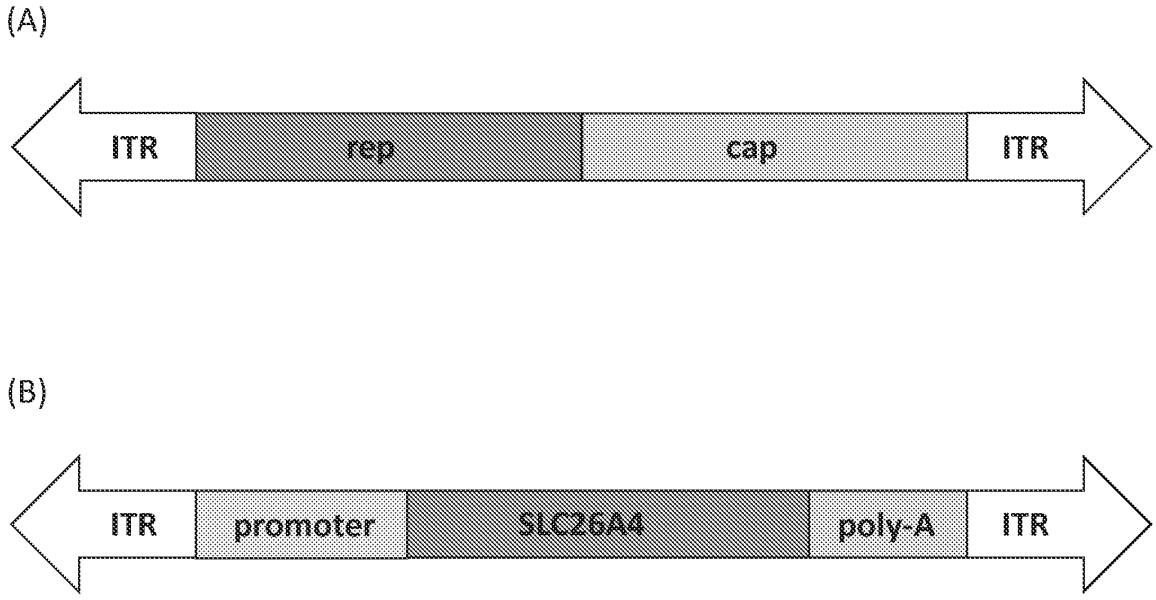

FIG. 1

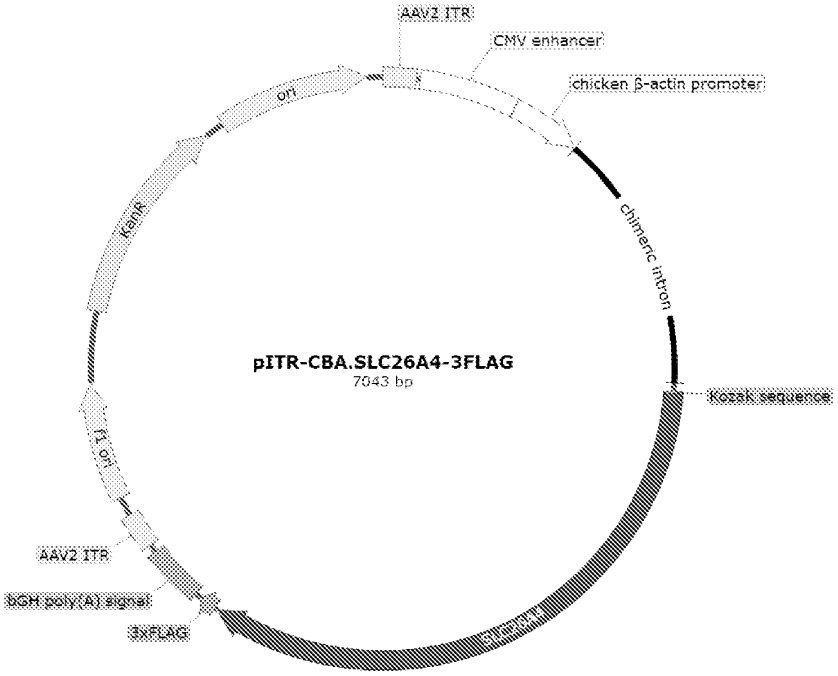
AAV2 ITR
CMV enhancer
chicken β-actin promoter
ori
KanR
chimeric intron
pITR-CBA.SLC26A4-3FLAG
7043 bp
Kozak sequence
f1 ori
AAV2 ITR
bGH poly(A) signal
3xFLAG
SLC26A4

FIG. 2

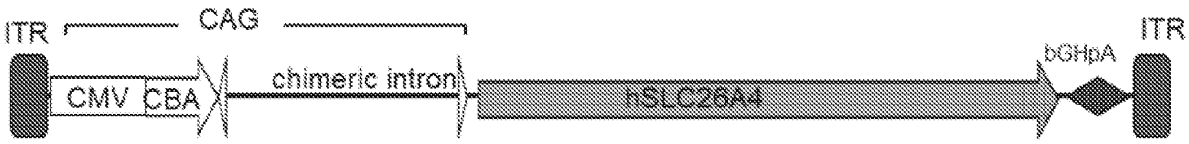

FIG. 3

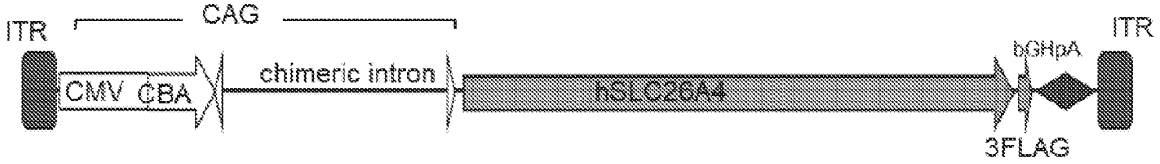

FIG. 4

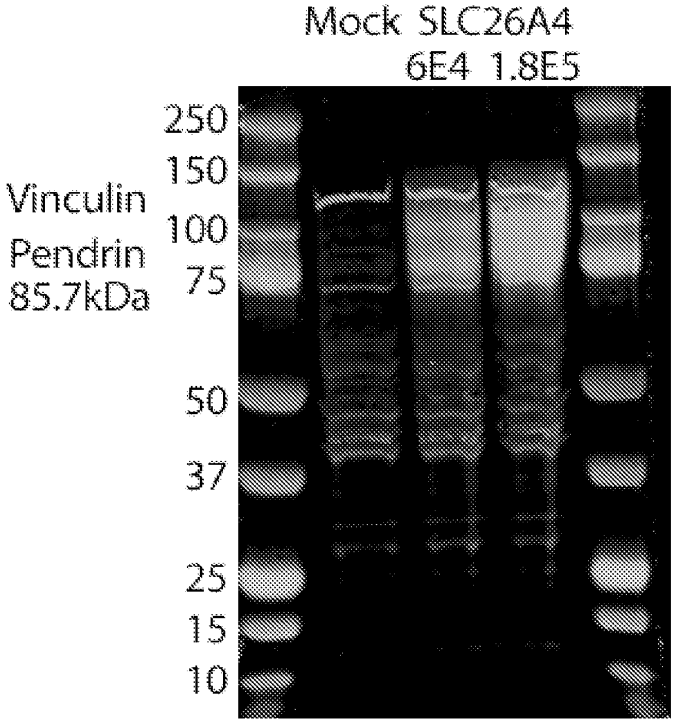
Mock SLC26A4
6E4 1.8E5
Vinculin
Pendrin
85.7kDa
250
150
100
75
50
37
25
15
10

FIG. 5

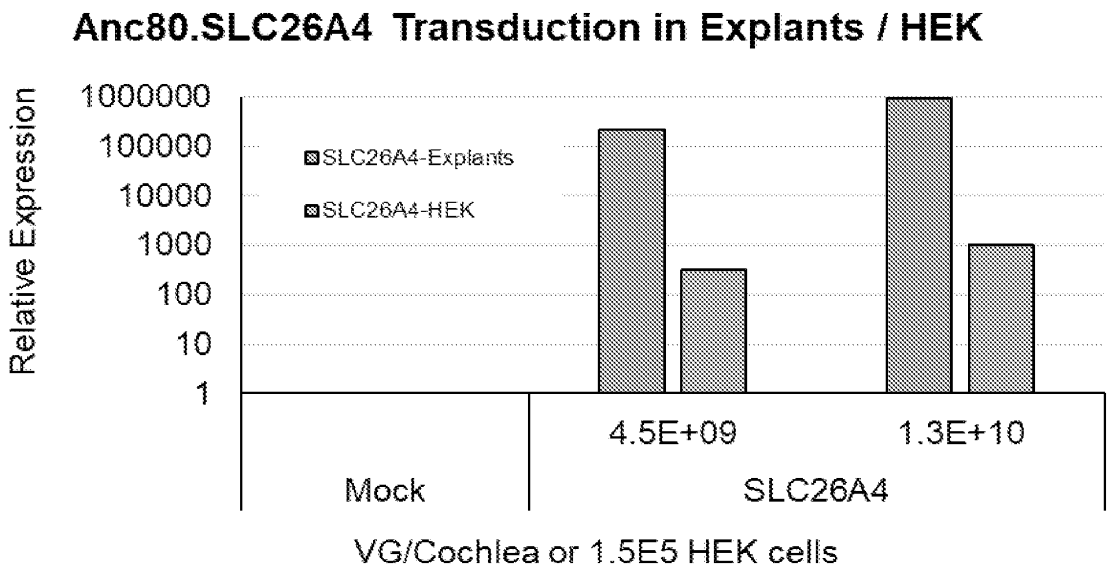
Anc80.SLC26A4 Transduction in Explants / HEK
Relative Expression
1000000
100000
10000
1000
100
10
1
SLC26A4-Explants
SLC26A4-HEK
4.5E+09
1.3E+10
Mock
SLC26A4
VG/Cochlea or 1.5E5 HEK cells

FIG. 6

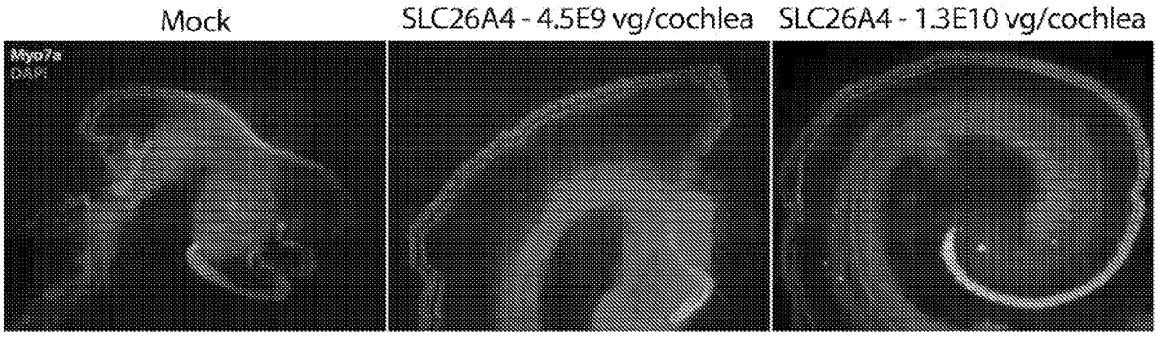

FIG. 7

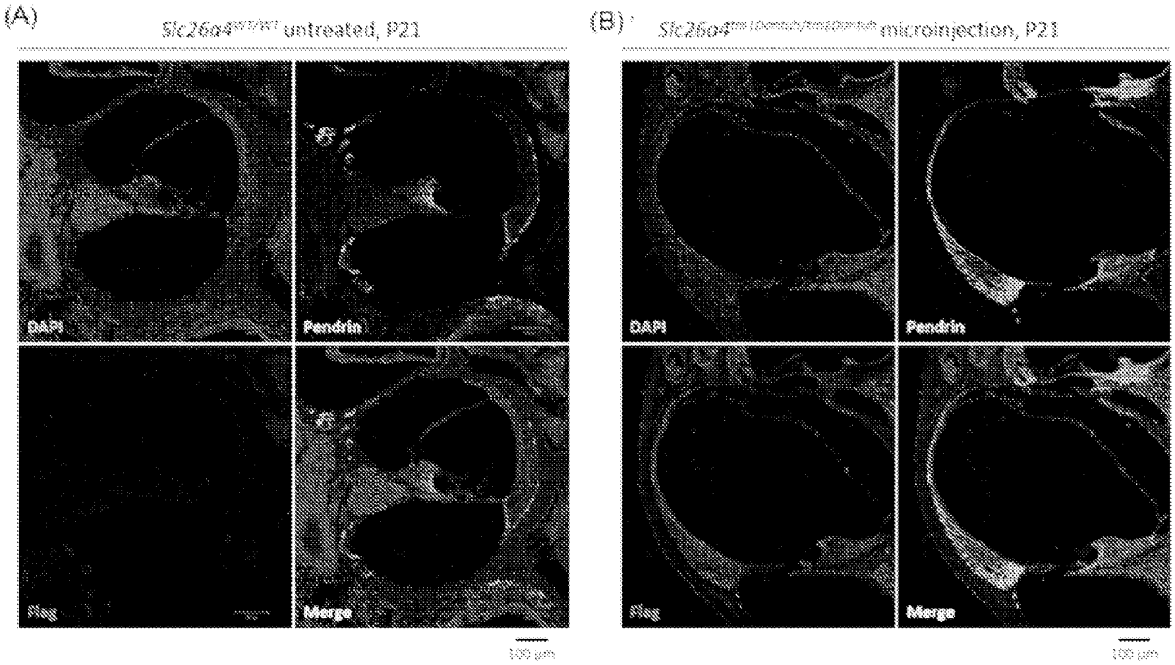
(A)
Slc26a4 untreated, P21
(B)
microinjection, P21
DAPI
Pendrin
Merge
100 μm

FIG. 8

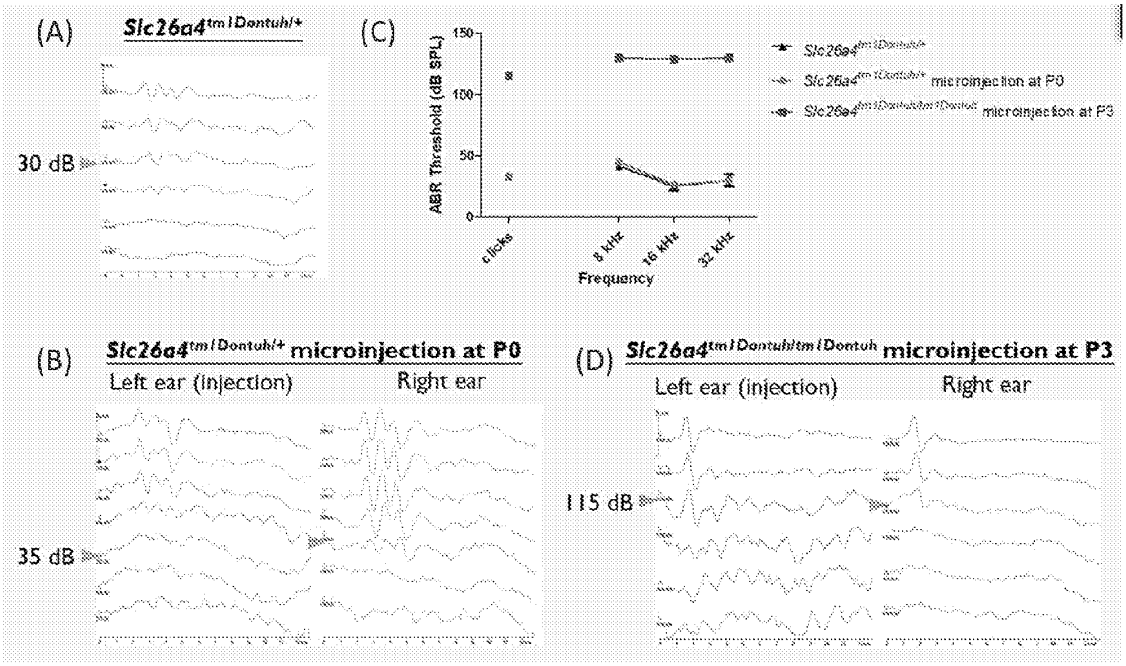
(A)
Slc26a4tm1Dontuh/+
30 dB
(C)
ABR Threshold (dB SPL)
150
100
50
0
clicks
8 kHz
16 kHz
32 kHz
Frequency
Slc26a4tm1Dontuh/+
Slc26a4tm1Dontuh/+ microinjection at P0
Slc26a4tm1Dontuh/tm1Dontuh microinjection at P3
(B)
Slc26a4tm1Dontuh/+ microinjection at P0
Left ear (injection)
Right ear
35 dB
(D)
Slc26a4tm1Dontuh/tm1Dontuh microinjection at P3
Left ear (injection)
Right ear
115 dB

FIG. 9

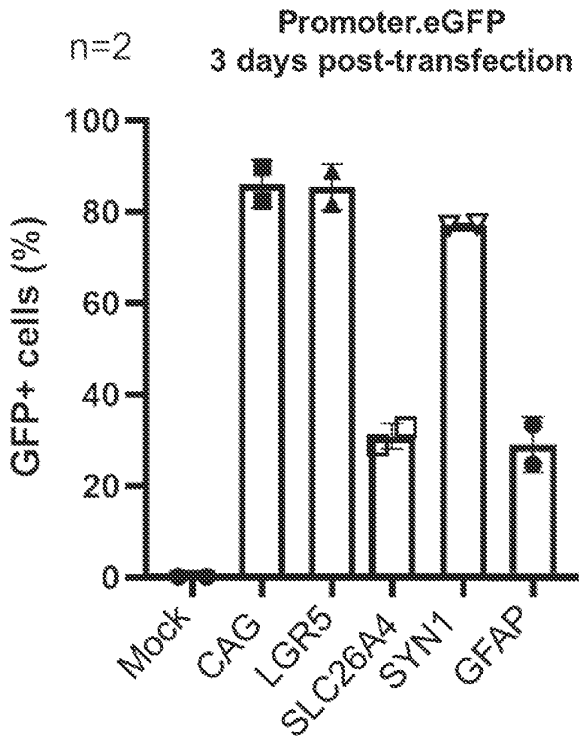
n=2
Promoter.eGFP
3 days post-transfection
GFP+ cells (%)
100
80
60
40
20
0
Mock
CAG
LGR5
SLC26A4
SYN1
GFAP

FIG. 10

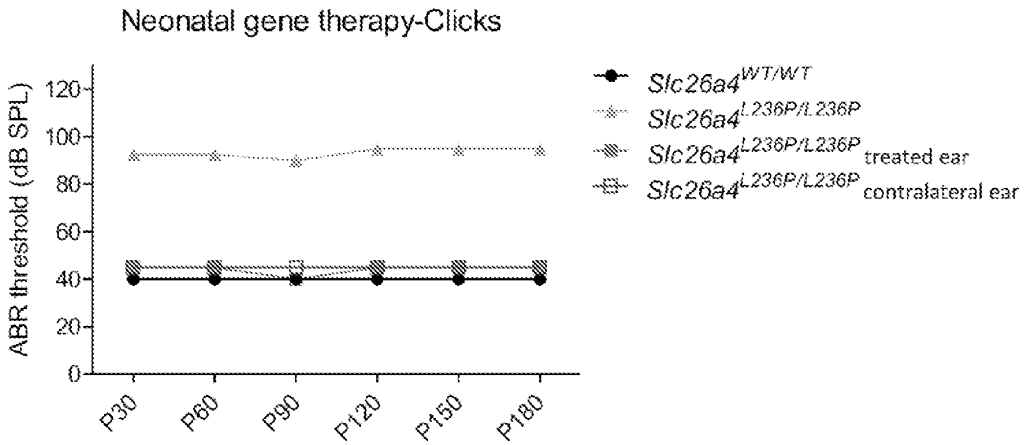
Neonatal gene therapy-Clicks
ABR threshold (dB SPL)
120
100
80
60
40
20
0
P30
P60
P90
P120
P150
P180
Slc26a4WT/WT
Slc26a4L236P/L236P
Slc26a4L236P/L236P treated ear
Slc26a4L236P/L236P contralateral ear

FIG. 11

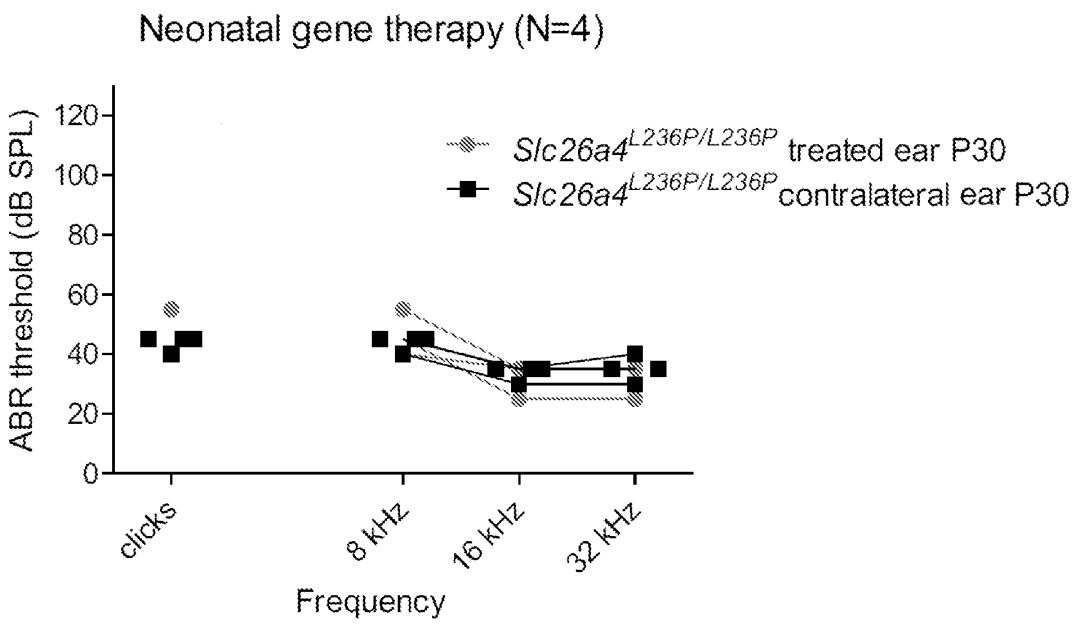
Neonatal gene therapy (N=4)
ABR threshold (dB SPL)
120
100
80
60
40
20
0
clicks
8 kHz
16 kHz
32 kHz
Frequency
Slc26a4L236P/L236P treated ear P30
Slc26a4L236P/L236P contralateral ear P30

FIG. 12

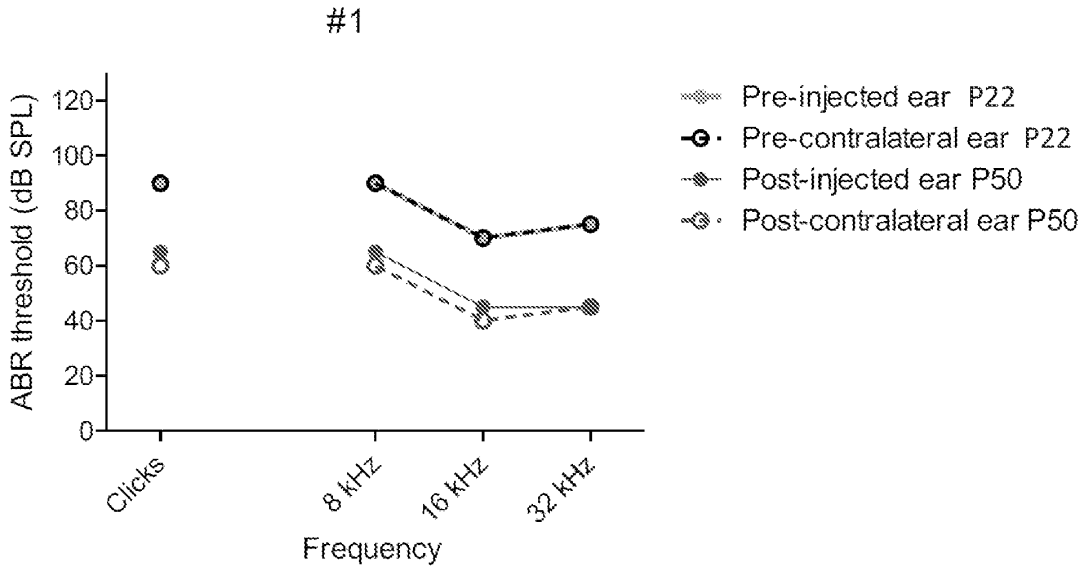
#1
ABR threshold (dB SPL)
120
100
80
60
40
20
0
Clicks
8 kHz
16 kHz
32 kHz
Frequency
Pre-injected ear P22
Pre-contralateral ear P22
Post-injected ear P50
Post-contralateral ear P50

FIG. 13A

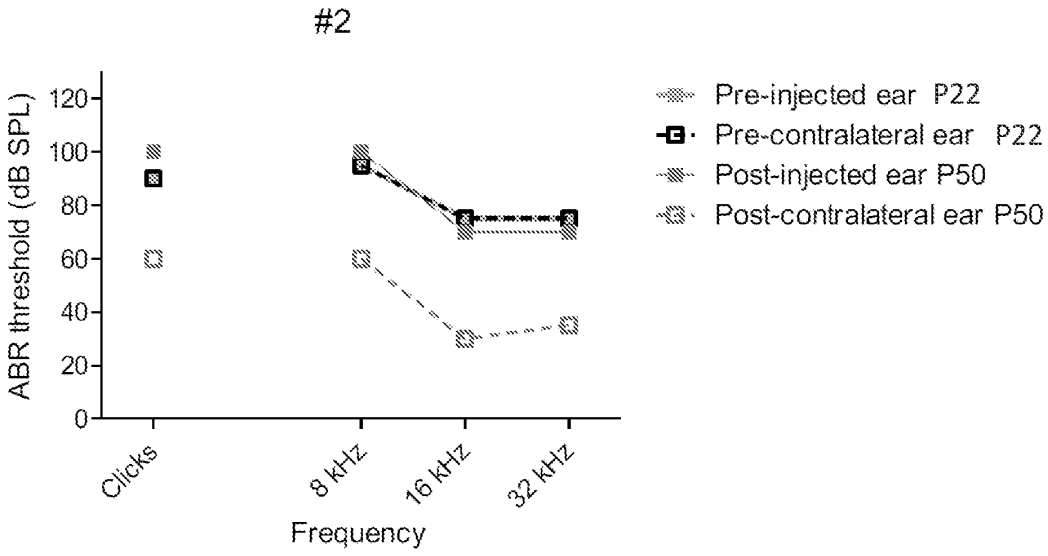
#2
ABR threshold (dB SPL)
120
100
80
60
40
20
0
Clicks
8 kHz
16 kHz
32 kHz
Frequency
Pre-injected ear P22
Pre-contralateral ear P22
Post-injected ear P50
Post-contralateral ear P50

FIG. 13B

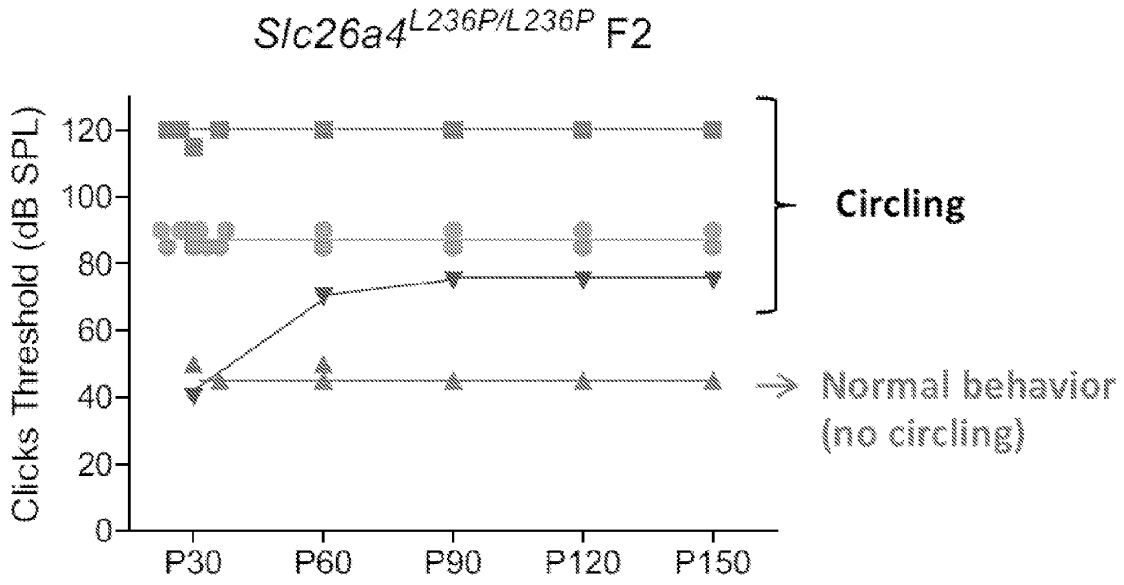
Slc26a4L236P/L236P F2
Clicks Threshold (dB SPL)
120
100
80
60
40
20
0
P30
P60
P90
P120
P150
Circling
Normal behavior
(no circling)

FIG. 14A

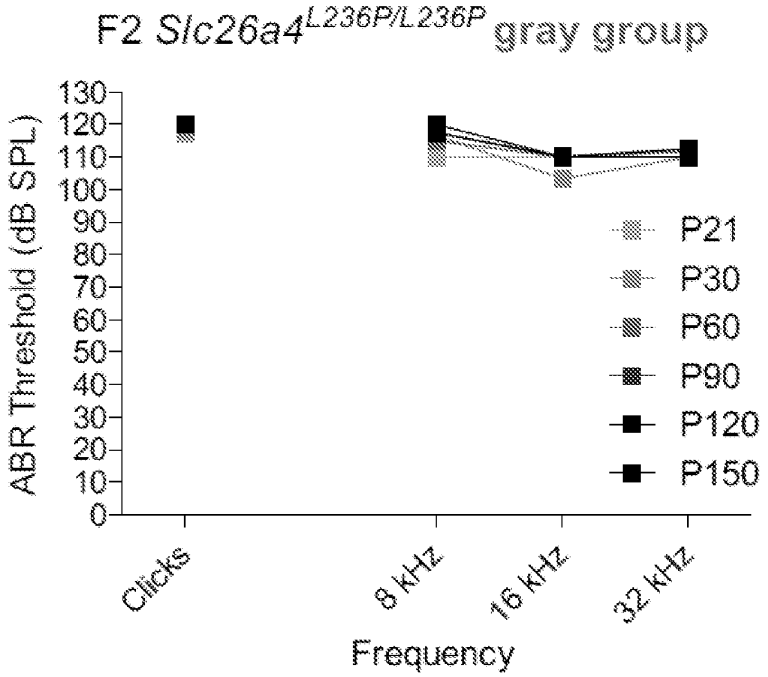
F2 Slc26a4L236P/L236P gray group
ABR Threshold (dB SPL)
130
120
110
100
90
80
70
60
50
40
30
20
10
0
Clicks
8 kHz
16 kHz
32 kHz
Frequency
P21
P30
P60
P90
P120
P150

FIG. 14B

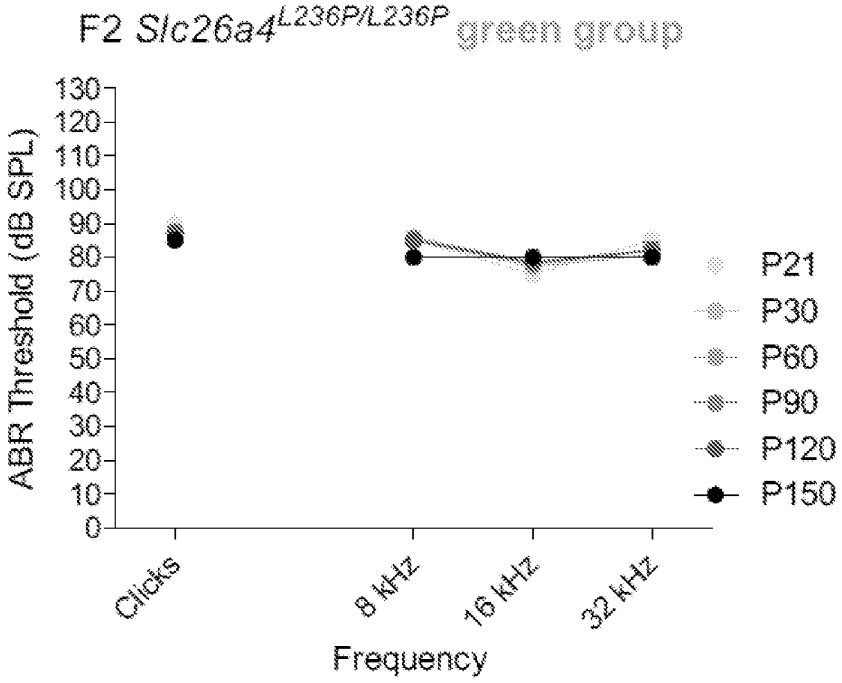
F2 Slc26a4L236P/L236P green group
ABR Threshold (dB SPL)
130
120
110
100
90
80
70
60
50
40
30
20
10
0
Clicks
8 kHz
16 kHz
32 kHz
Frequency
P21
P30
P60
P90
P120
P150

FIG. 14C

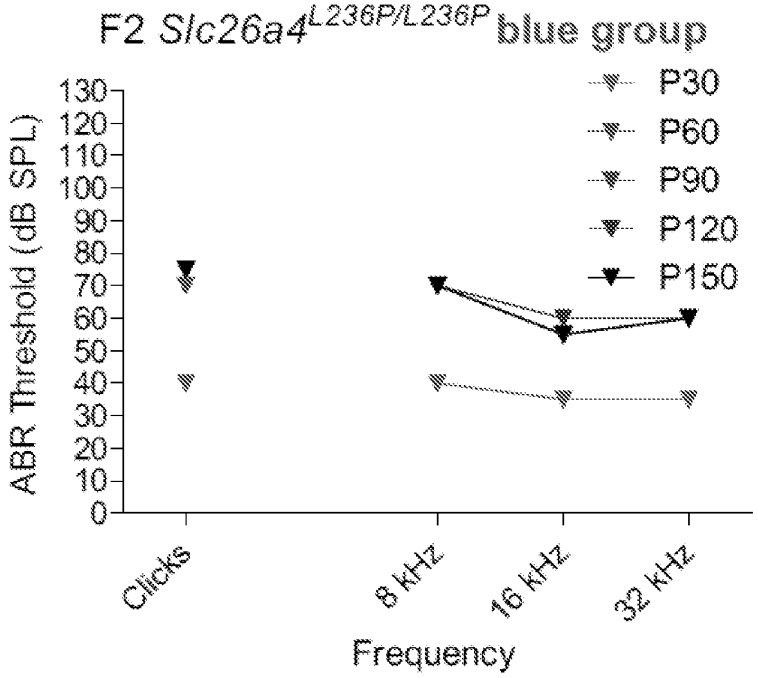
F2 Slc26a4L236P/L236P blue group
P30
P60
P90
P120
P150
ABR Threshold (dB SPL)
130
120
110
100
90
80
70
60
50
40
30
20
10
0
Clicks
8 kHz
16 kHz
32 kHz
Frequency

FIG. 14D

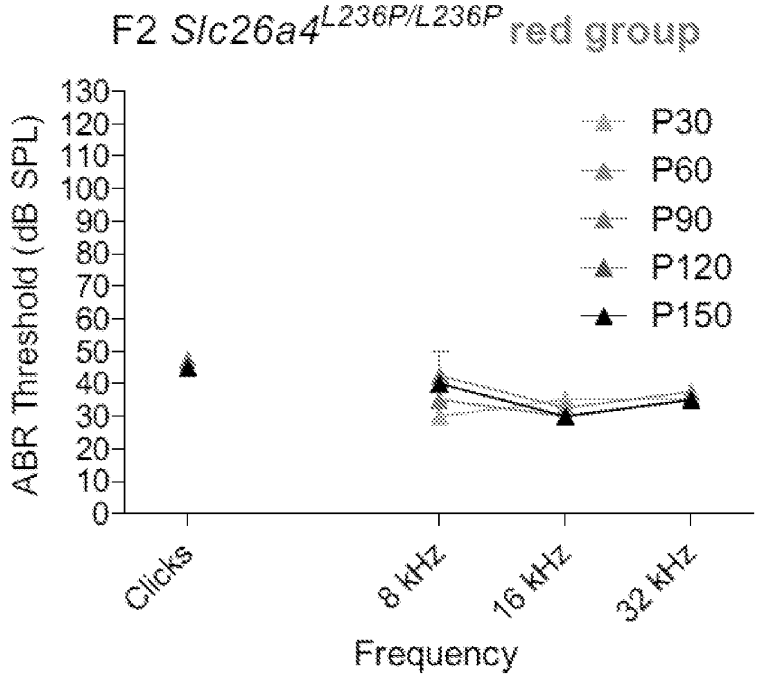
F2 Slc26a4L236P/L236P red group
ABR Threshold (dB SPL)
130
120
110
100
90
80
70
60
50
40
30
20
10
0
P30
P60
P90
P120
P150
Clicks
8 kHz
16 kHz
32 kHz
Frequency

FIG. 14E

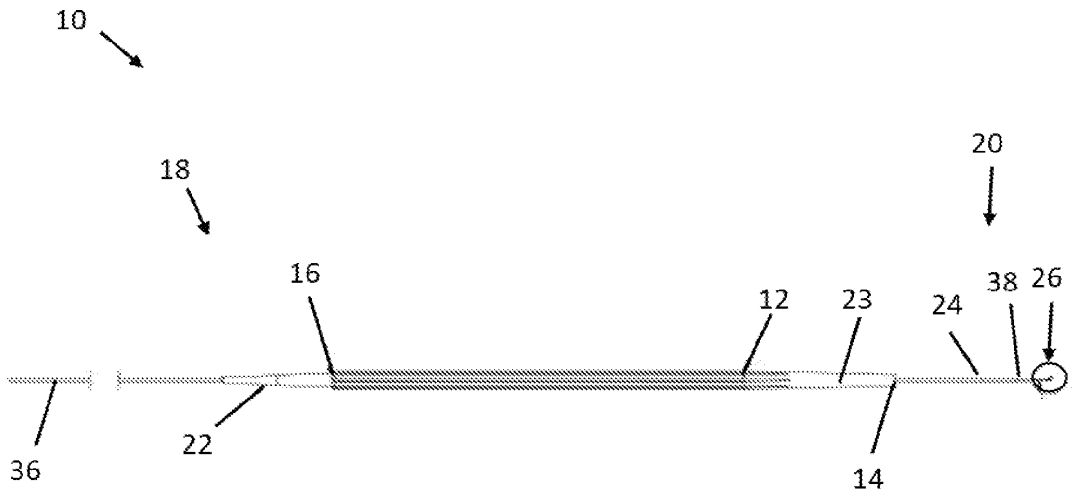

FIG. 15

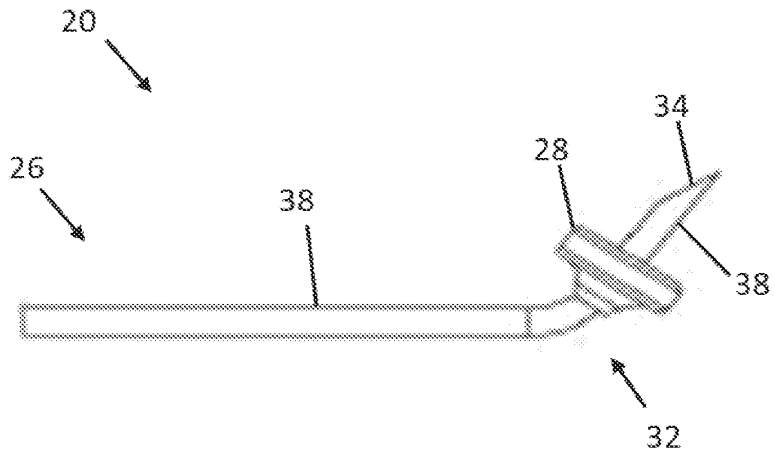

FIG. 16

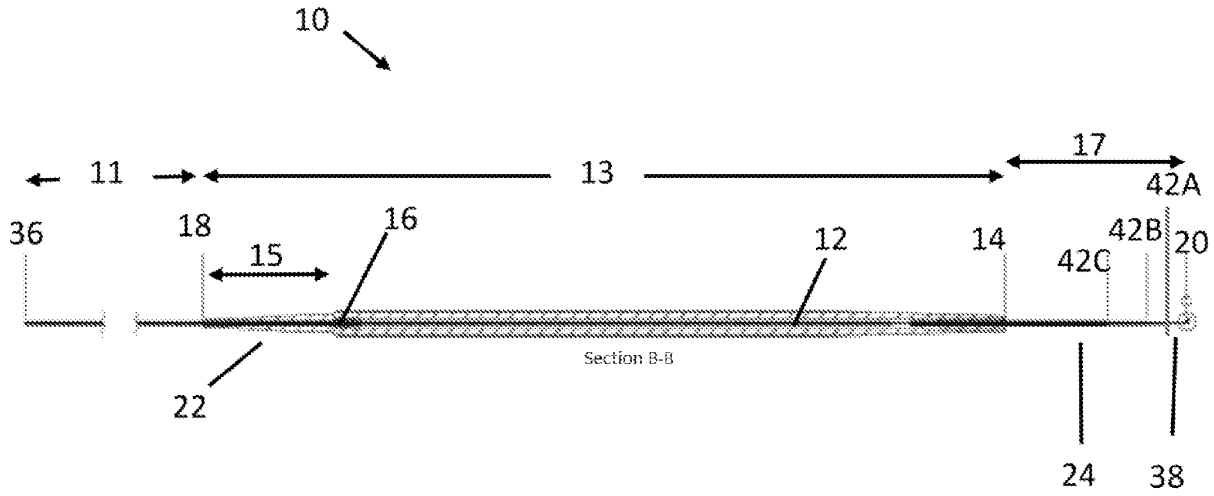

FIG. 17

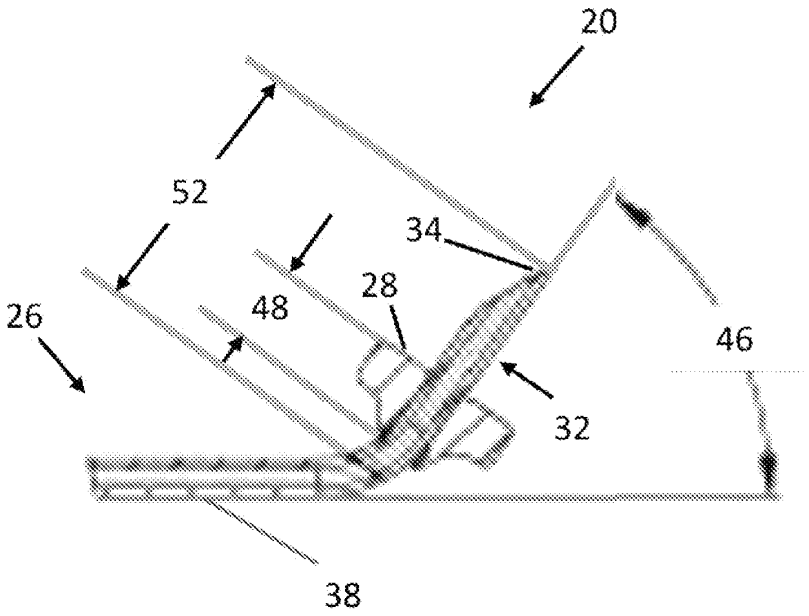

FIG. 18