(12) INTERNATIONAL APPLICATION PUBLISHED UNDER THE PATENT COOPERATION TREATY (PCT)

(19) World Intellectual Property Organization
International Bureau

(43) International Publication Date
4 November 2010 (04.11.2010)

PCT

(10) International Publication Number
WO 2010/125331 A3

(51) **International Patent Classification**:
E21B 19/14 (2006.01)

(21) **International Application Number**:
PCT/GB2010/000822

(22) **International Filing Date**:
27 April 2010 (27.04.2010)

(25) **Filing Language**: English

(26) **Publication Language**: English

(30) **Priority Data**:
0907199.4 27 April 2009 (27.04.2009) GB

(71) **Applicant** *(for all designated States except US)*: **DERRICK SERVICES (UK) LIMITED** [GB/GB]; Falcongate House, Faraday Road, Harfreys Industrial Estate, Great Yarmouth NR31 0NF (GB).

(72) **Inventor; and**

(75) **Inventor/Applicant** *(for US only)*: **MILLAR, Robert** [GB/GB]; Derrick Services (UK) Limited, Falcongate House, Faraday Road, Harfreys Industrial Estate, Great Yarmouth NR31 0NF (GB).

(74) **Agent**: **NOVAGRAAF NORWICH**; 12 Meridian Way, Meridian Business Park, Norwich, Norfolk NR7 0TA (GB).

(81) **Designated States** *(unless otherwise indicated, for every kind of national protection available)*: AE, AG, AL, AM, AO, AT, AU, AZ, BA, BB, BG, BH, BR, BW, BY, BZ, CA, CH, CL, CN, CO, CR, CU, CZ, DE, DK, DM, DO, DZ, EC, EE, EG, ES, FI, GB, GD, GE, GH, GM, GT, HN, HR, HU, ID, IL, IN, IS, JP, KE, KG, KM, KN, KP, KR, KZ, LA, LC, LK, LR, LS, LT, LU, LY, MA, MD, ME, MG, MK, MN, MW, MX, MY, MZ, NA, NG, NI, NO, NZ, OM, PE, PG, PH, PL, PT, RO, RS, RU, SC, SD, SE, SG, SK, SL, SM, ST, SV, SY, TH, TJ, TM, TN, TR, TT, TZ, UA, UG, US, UZ, VC, VN, ZA, ZM, ZW.

(84) **Designated States** *(unless otherwise indicated, for every kind of regional protection available)*: ARIPO (BW, GH, GM, KE, LR, LS, MW, MZ, NA, SD, SL, SZ, TZ, UG, ZM, ZW), Eurasian (AM, AZ, BY, KG, KZ, MD, RU, TJ, TM), European (AT, BE, BG, CH, CY, CZ, DE, DK, EE, ES, FI, FR, GB, GR, HR, HU, IE, IS, IT, LT, LU, LV, MC, MK, MT, NL, NO, PL, PT, RO, SE, SI, SK, SM, TR), OAPI (BF, BJ, CF, CG, CI, CM, GA, GN, GQ, GW, ML, MR, NE, SN, TD, TG).

Published:

— *with international search report (Art. 21(3))*

— *before the expiration of the time limit for amending the claims and to be republished in the event of receipt of amendments (Rule 48.2(h))*

(88) **Date of publication of the international search report**:
30 June 2011

(54) **Title**: AN IMPROVED MEANS OF PIPE HANDLING

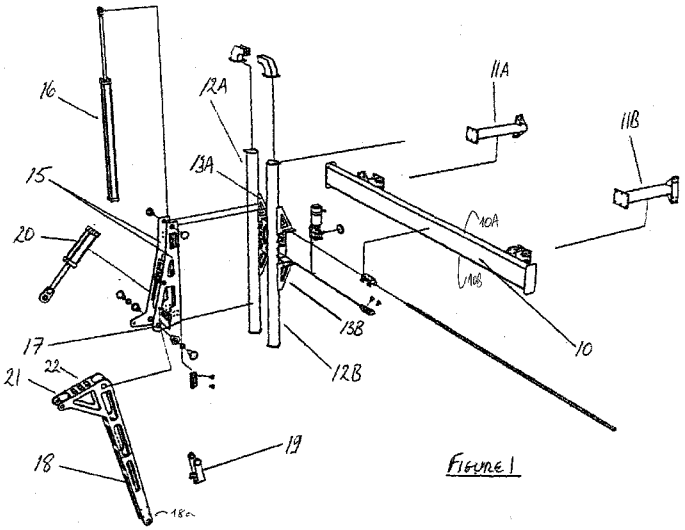

FIGURE 1

(57) **Abstract**: An apparatus to transfer a pipe length between a well bore and a storage location, the apparatus comprising a first support means (12A, 12B) mounted for linear movement in a first horizontal direction, a second support means (15), operably mounted to the first support means (12A, 12B) and mounted for linear movement in a vertical direction; a support boom (18) pivotally mounted to the second support means (15) and having gripping means (19) to retain a pipe section, the support boom (18) being pivotable to move the gripping means (19) in a substantially horizontal direction, perpendicular to the first horizontal direction.

WO 2010/125331 A3