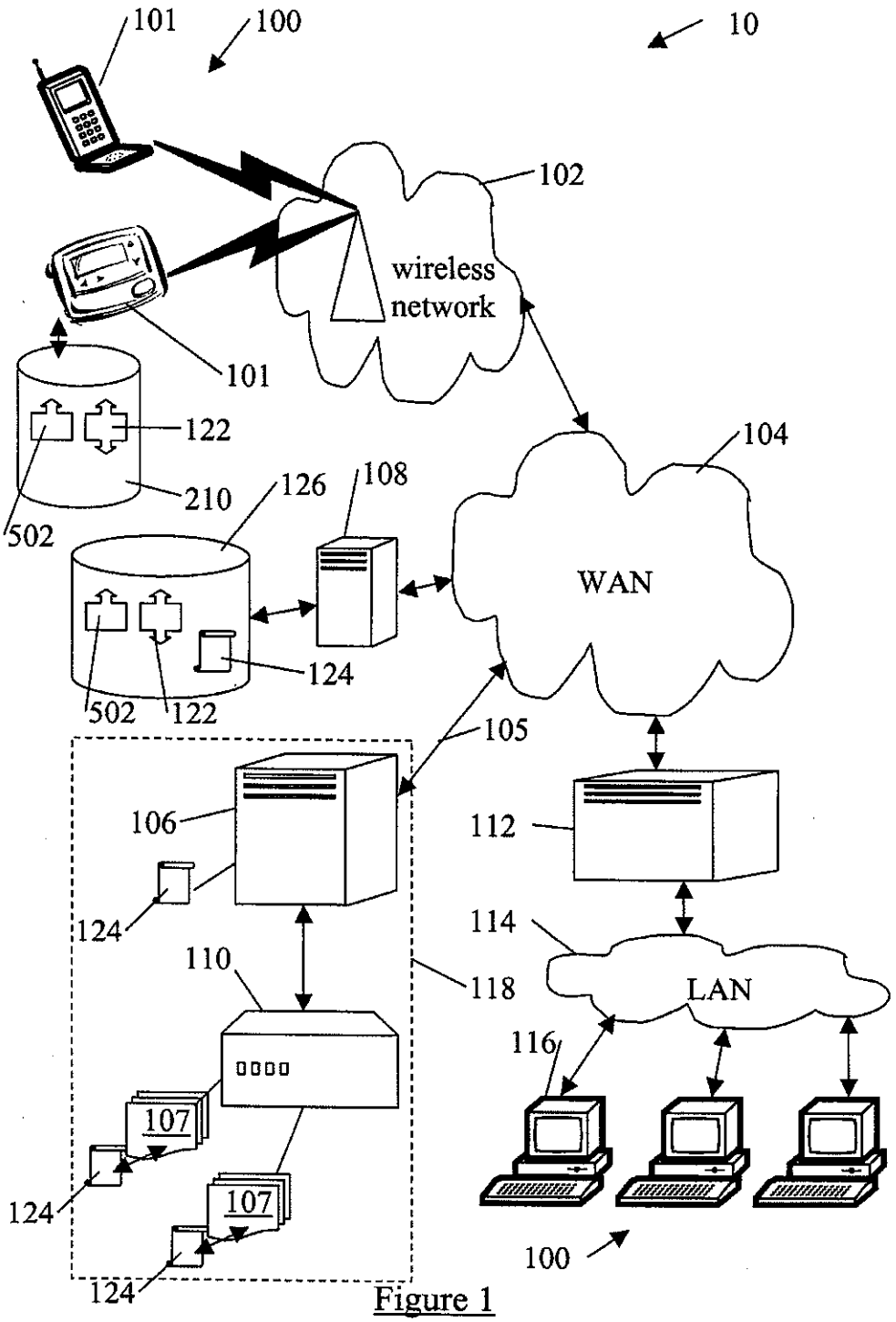
101
100
10
102
wireless
network
101
122
210
502
126
108
104
WAN
124
502
122
105
106
112
124
114
110
LAN
118
116
107
124
107
124
100

Figure 1

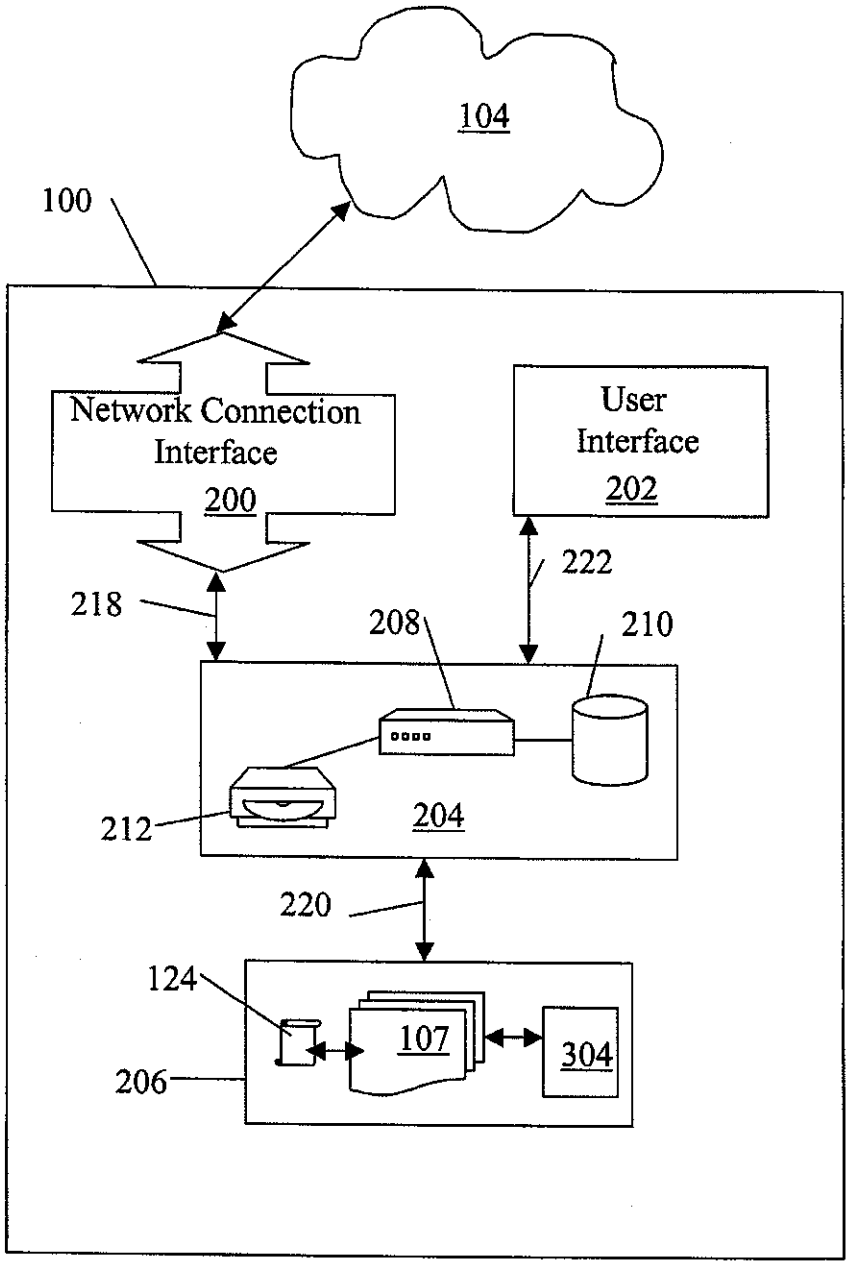
104
100
Network Connection Interface
200
User Interface
202
222
218
208
210
212
204
220
124
107
304
206

Figure 2

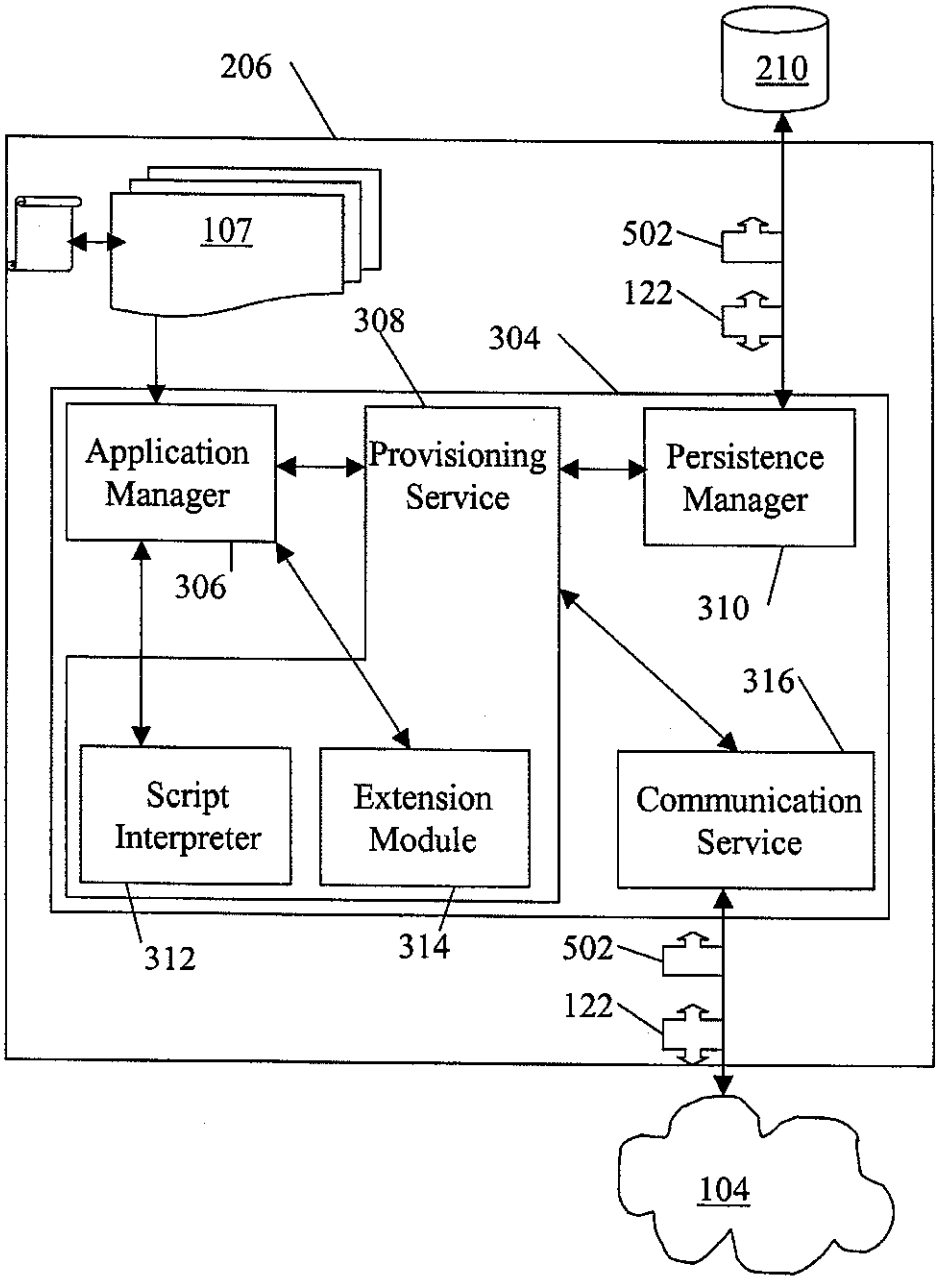
206
210
107
502
122
308
304
Application Manager
Provisioning Service
Persistence Manager
306
310
316
Script Interpreter
Extension Module
Communication Service
312
314
502
122
104

Figure 3

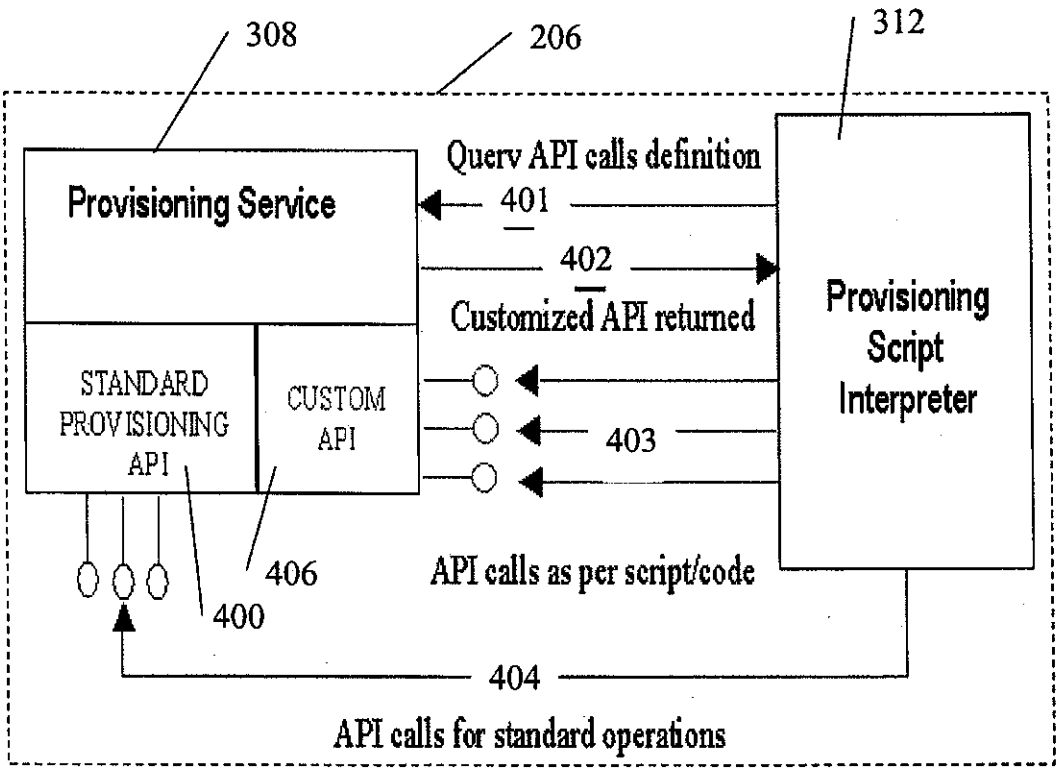
308
206
312
Provisioning Service
Query API calls definition
401
402
Customized API returned
Provisioning Script Interpreter
STANDARD PROVISIONING API
CUSTOM API
403
406
400
API calls as per script/code
404
API calls for standard operations

Figure 4

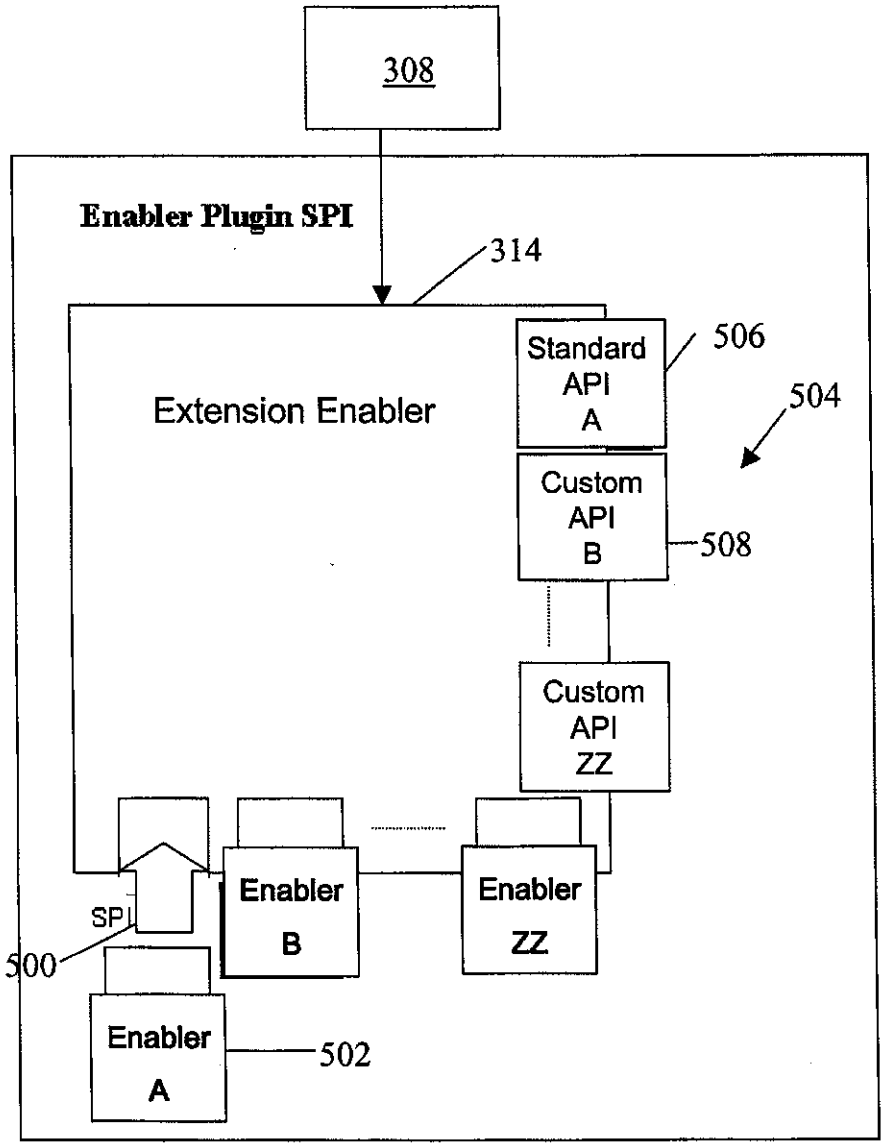
308
Enabler Plugin SPI
314
Extension Enabler
Standard API A
506
504
Custom API B
508
Custom API ZZ
Enabler B
Enabler ZZ
SPI
500
Enabler A
502

Figure 5

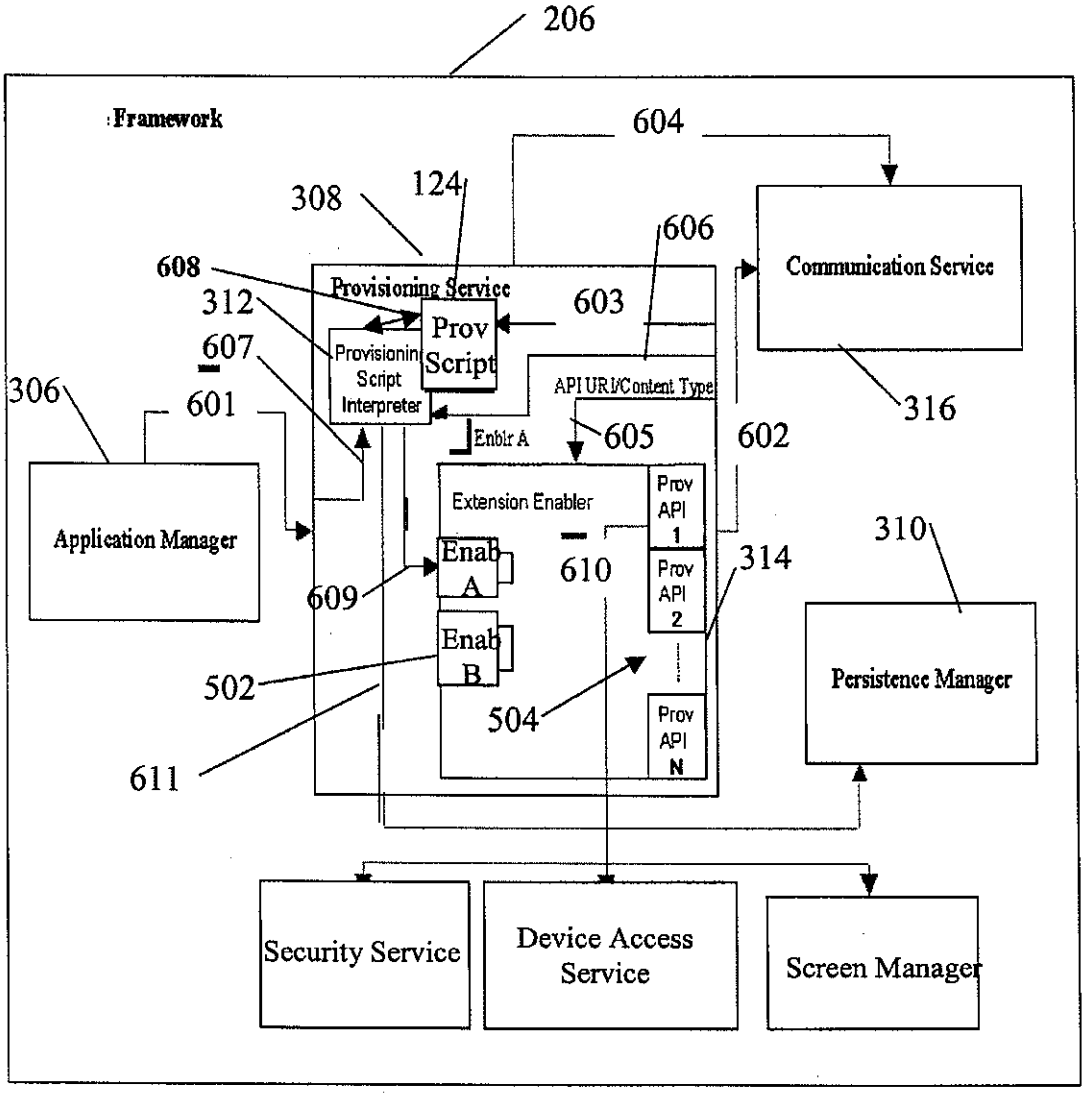
206
Framework
604
308
124
606
608
Provisioning Service
603
Communication Service
312
Prov Script
607
Provisionin Script Interpreter
API URI/Content Type
306
601
316
Enblr A
605
602
Application Manager
Extension Enabler
Prov API 1
310
Enab A
610
Prov API 2
314
609
Enab B
Persistence Manager
502
504
611
Prov API N
Security Service
Device Access Service
Screen Manager

Figure 6

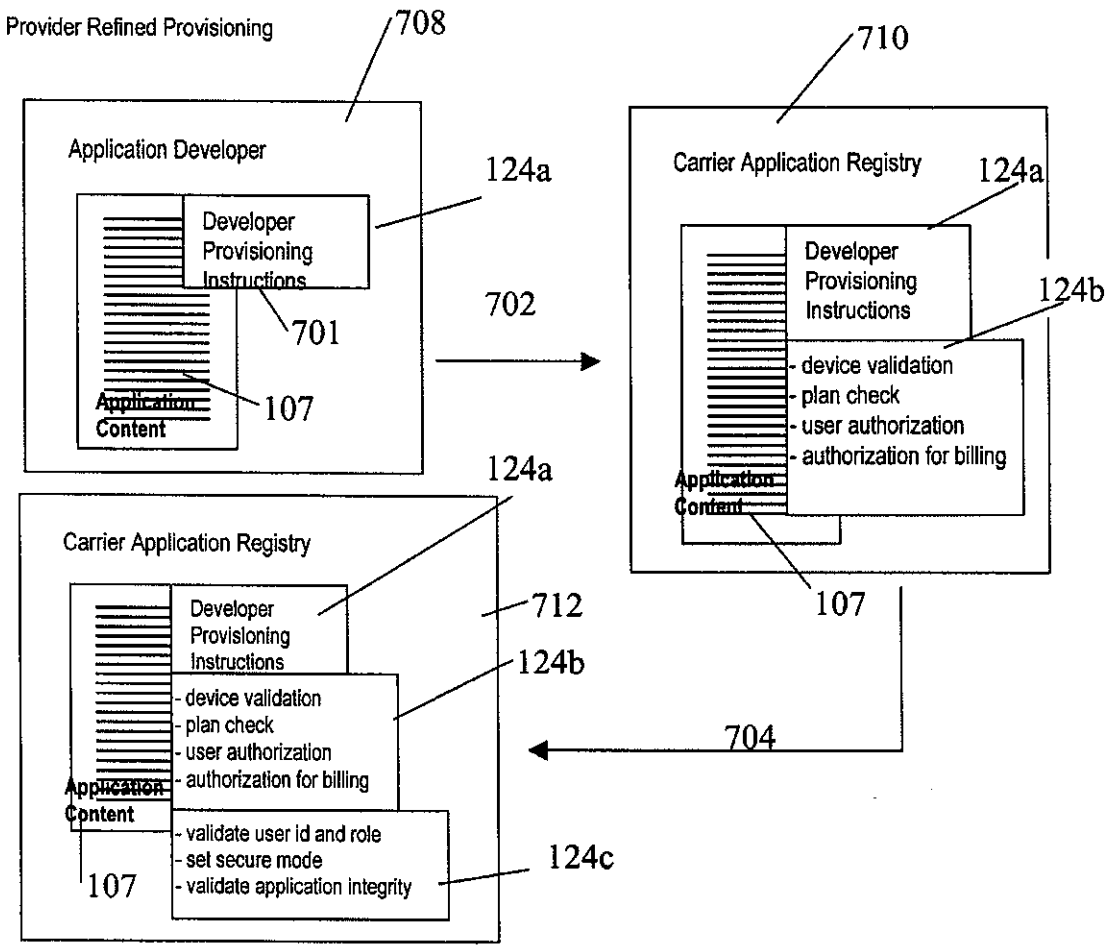
Provider Refined Provisioning
708
Application Developer
124a
Developer Provisioning Instructions
701
Application Content
107
702
710
Carrier Application Registry
124a
Developer Provisioning Instructions
124b
- device validation
- plan check
- user authorization
- authorization for billing
Application Content
107
704
124a
Carrier Application Registry
712
Developer Provisioning Instructions
124b
- device validation
- plan check
- user authorization
- authorization for billing
Application Content
107
- validate user id and role
- set secure mode
- validate application integrity
124c

Figure 7