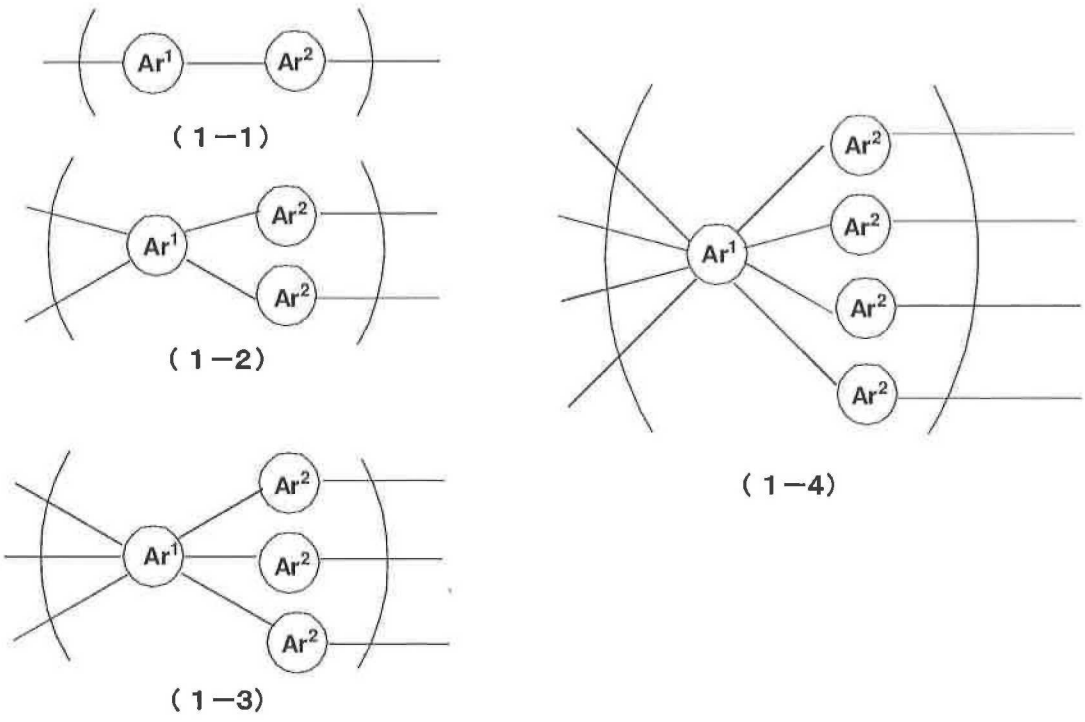


(where $Ar^1$ is a divalent, tetravalent, hexavalent, or octavalent organic group including at least one $C_{6-18}$ aromatic ring; $Ar^2$ is a divalent organic group including a $C_{6-18}$ aromatic ring bonded to $Ar^1$ through methylene group or a tertiary carbon atom, and at least one of the aromatic rings have hydroxy group and/or carboxy group as a substituent)

The polymer having a structure unit of any one of Formulas (1-1) to (1-4) optionally further includes a linear or branched alkyl group having a carbon atom number of 1 to 10 in which a halogen atom is optionally substituted for at least one hydrogen atom.

[0012] The divalent, tetravalent, hexavalent, or octavalent organic group of $Ar^1$ is, for example, a group having bonded ends bonded to any two, four, six, or eight positions of aromatic rings in a compound of any one of Formulas (2-1) to (2-5); the bonded ends and the divalent organic group of $Ar^2$ are bonded; and $Ar^2$ is a divalent organic group of Formula (3-1), or a divalent organic group of Formula (3- 2).

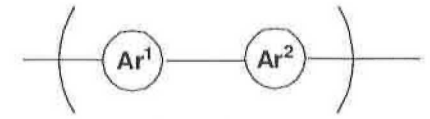


( 1 — 1 )

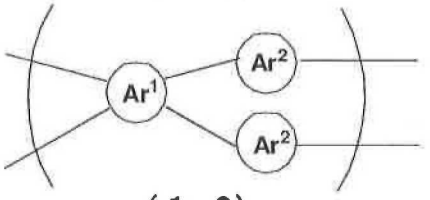


( 1 — 2 )

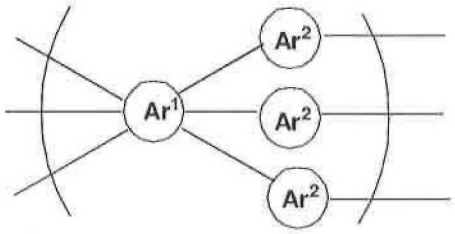


( 1 — 3 )

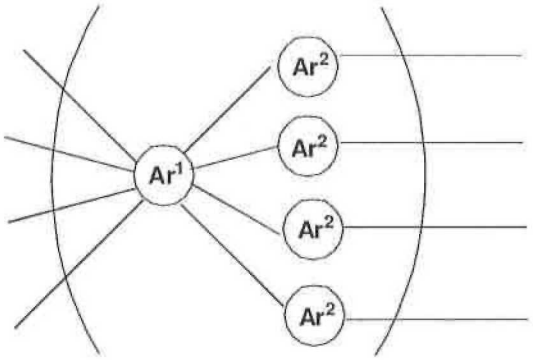


( 1 — 4 )

(where $Ar^1$ is a divalent, tetravalent, hexavalent, or octavalent organic group including at least one $C_{6-18}$ aromatic ring; $Ar^2$ is a divalent organic group including a $C_{6-18}$ aromatic ring bonded to $Ar^1$ through methylene group or a tertiary carbon atom, and at least one of the aromatic rings have hydroxy group and/or carboxy group as a substituent).

7. The coating liquid for resist pattern coating according to claim 6, wherein

the divalent, tetravalent, hexavalent, or octavalent organic group of $Ar^1$ is a group having bonded ends bonded to any two, four, six, or eight positions of aromatic rings in a compound of any one of Formulas (2-1) to (2-5) below, and

$Ar^2$ is a divalent organic group of Formula (3-1) below, or a divalent organic group of Formula (3- 2) below: