(12) INTERNATIONAL APPLICATION PUBLISHED UNDER THE PATENT COOPERATION TREATY (PCT)

(19) World Intellectual Property Organization
International Bureau

(43) International Publication Date
29 May 2008 (29.05.2008)

PCT

(10) International Publication Number
WO 2008/063138 A2

(51) International Patent Classification:
G01R 1/04 (2006.01) *H05K 3/34* (2006.01)
H01L 23/498 (2006.01)

(21) International Application Number:
PCT/SG2007/000402

(22) International Filing Date:
22 November 2007 (22.11.2007)

(25) Filing Language: English

(26) Publication Language: English

(30) Priority Data:
200608015-4 22 November 2006 (22.11.2006) SG
200703231-1 7 May 2007 (07.05.2007) SG

(71) Applicant *(for all designated States except US)*: **ROKKO VENTURES PTE LTD** [SG/SG]; 18 Kaki Bukit Road 3, #02-01 Entrepreneur Business Centre, Singapore 415978 (SG).

(72) Inventors; and

(75) Inventors/Applicants *(for US only)*: **LING, Nee Seng** [SG/SG]; 962 Duneam Road #10-31, Singapore 589487 (SG). **ANG, Soo Loo** [SG/SG]; Blk 224 Serangoon Ave 4 #07-171, Singapore 550224 (SG). **PAI, Ter Siang** [MY/SG]; Blk 270 Toh Guan Road #04-101, Singapore 600270 (SG).

(74) Agent: **ENGLISH, Matthew**; Lloyd Wise, Tanjong Pagar, P.O. Box 636, Singapore 910816 (SG).

(81) Designated States *(unless otherwise indicated, for every kind of national protection available)*: AE, AG, AL, AM, AT, AU, AZ, BA, BB, BG, BH, BR, BW, BY, BZ, CA, CH, CN, CO, CR, CU, CZ, DE, DK, DM, DO, DZ, EC, EE, EG, ES, FI, GB, GD, GE, GH, GM, GT, HN, HR, HU, ID, IL, IN, IS, JP, KE, KG, KM, KN, KP, KR, KZ, LA, LC, LK, LR, LS, LT, LU, LY, MA, MD, ME, MG, MK, MN, MW, MX, MY, MZ, NA, NG, NI, NO, NZ, OM, PG, PH, PL, PT, RO, RS, RU, SC, SD, SE, SG, SK, SL, SM, SV, SY, TJ, TM, TN, TR, TT, TZ, UA, UG, US, UZ, VC, VN, ZA, ZM, ZW.

(84) Designated States *(unless otherwise indicated, for every kind of regional protection available)*: ARIPO (BW, GH, GM, KE, LS, MW, MZ, NA, SD, SL, SZ, TZ, UG, ZM, ZW), Eurasian (AM, AZ, BY, KG, KZ, MD, RU, TJ, TM), European (AT, BE, BG, CH, CY, CZ, DE, DK, EE, ES, FI, FR, GB, GR, HU, IE, IS, IT, LT, LU, LV, MC, MT, NL, PL, PT, RO, SE, SI, SK, TR), OAPI (BF, BJ, CF, CG, CI, CM, GA, GN, GQ, GW, ML, MR, NE, SN, TD, TG).

Declaration under Rule 4.17:
— *of inventorship (Rule 4.17(iv))*

[Continued on next page]

(54) Title: AN IMPROVED BALL MOUNTING APPARATUS AND METHOD

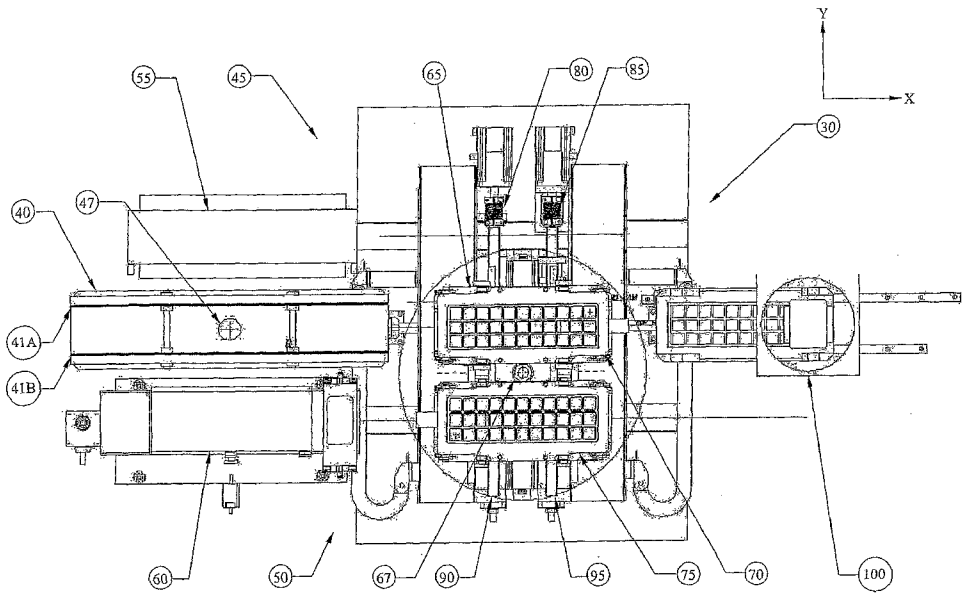

(57) Abstract: A device for mounting an array of solder balls to a plurality of substrates of integrated circuits, comprising: a first plate for receiving a first substrate in a loading position; said first plate adapted to translate laterally from a substrate loading position to a flux receiving position; said first plate further adapted to rotate 180° from the substrate loading position to a such that the first plate is in a solder ball receiving position, and; mounting solder balls to the first plate.

WO 2008/063138 A2

Published:

— *without international search report and to be republished upon receipt of that report*