(12) INTERNATIONAL APPLICATION PUBLISHED UNDER THE PATENT COOPERATION TREATY (PCT)

(19) World Intellectual Property Organization
International Bureau

(43) International Publication Date
4 July 2002 (04.07.2002)

PCT

(10) International Publication Number
WO 02/052565 A1

(51) International Patent Classification[7]: G11B 27/031, H04N 5/91, G06F 3/14

(21) International Application Number: PCT/SG00/00197

(22) International Filing Date:
22 December 2000 (22.12.2000)

(25) Filing Language: English

(26) Publication Language: English

(71) Applicant *(for all designated States except US)*: **KENT RIDGE DIGITAL LABS** [SG/SG]; 21 Heng Mui Keng Terrace, Singapore 119613 (SG).

(72) Inventors; and
(75) Inventors/Applicants *(for US only)*: **KELLOCK, Peter, Rowan** [GB/SG]; 97a Upper Thomson Road, #08-02 Lakeview, Singapore 574327 (SG). **ALTMAN, Edward, James** [US/SG]; 41 Hume Avenue, #05-12 Symphony Heights, Singapore 598738 (SG).

(74) Agent: **GREENE-KELLY, James, Patrick**; Lloyd Wise, Tanjong Pagar, P.O. Box 636, Singapore 910816 (SG).

(81) Designated States *(national)*: AE, AG, AL, AM, AT, AU, AZ, BA, BB, BG, BR, BY, BZ, CA, CH, CN, CR, CU, CZ, DE, DK, DM, DZ, EE, ES, FI, GB, GD, GE, GH, GM, HR, HU, ID, IL, IN, IS, JP, KE, KG, KP, KR, KZ, LC, LK, LR, LS, LT, LU, LV, MA, MD, MG, MK, MN, MW, MX, MZ, NO, NZ, PL, PT, RO, RU, SD, SE, SG, SI, SK, SL, TJ, TM, TR, TT, TZ, UA, UG, US, UZ, VN, YU, ZA, ZW.

(84) Designated States *(regional)*: ARIPO patent (GH, GM, KE, LS, MW, MZ, SD, SL, SZ, TZ, UG, ZW), Eurasian patent (AM, AZ, BY, KG, KZ, MD, RU, TJ, TM), European patent (AT, BE, CH, CY, DE, DK, ES, FI, FR, GB, GR, IE, IT, LU, MC, NL, PT, SE, TR), OAPI patent (BF, BJ, CF, CG, CI, CM, GA, GN, GW, ML, MR, NE, SN, TD, TG).

Published:
— *with international search report*

For two-letter codes and other abbreviations, refer to the "Guidance Notes on Codes and Abbreviations" appearing at the beginning of each regular issue of the PCT Gazette.

(54) Title: SYSTEM AND METHOD FOR MEDIA PRODUCTION

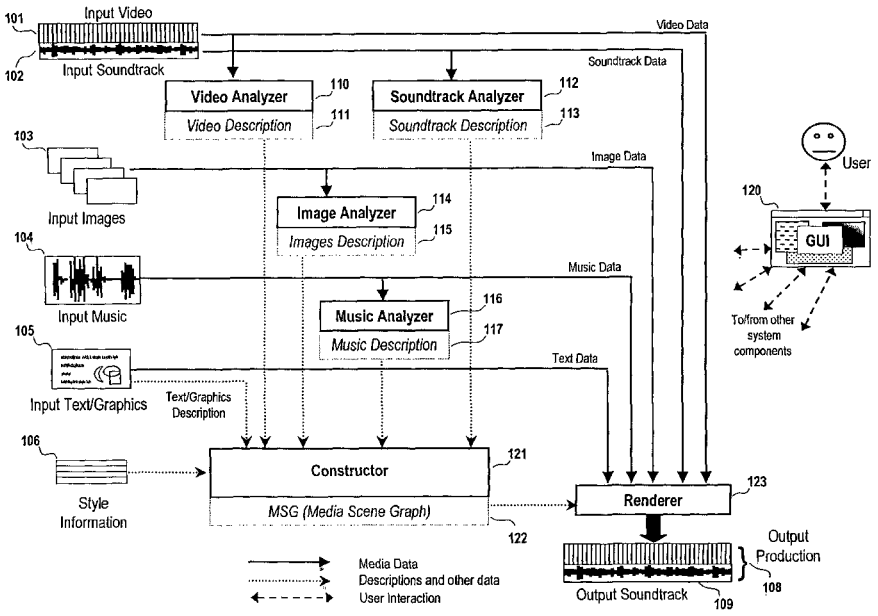

(57) Abstract: An editing system is proposed for automatically, or semi-automatically, editing input data to generate output production. The input material is annotated by, or analyzed to derive, a set of media descriptors which describe the input material and which are derived from the input material. The style of editing is controlled using style data which is optionally derived from a user. The input material may include any or more of motion video, still images, music, speech, sound effects, animated graphics and text. The style data and the descriptors are used to generate a set of operations which, when carried out on the input data, generate an edited output production.

WO 02/052565 A1