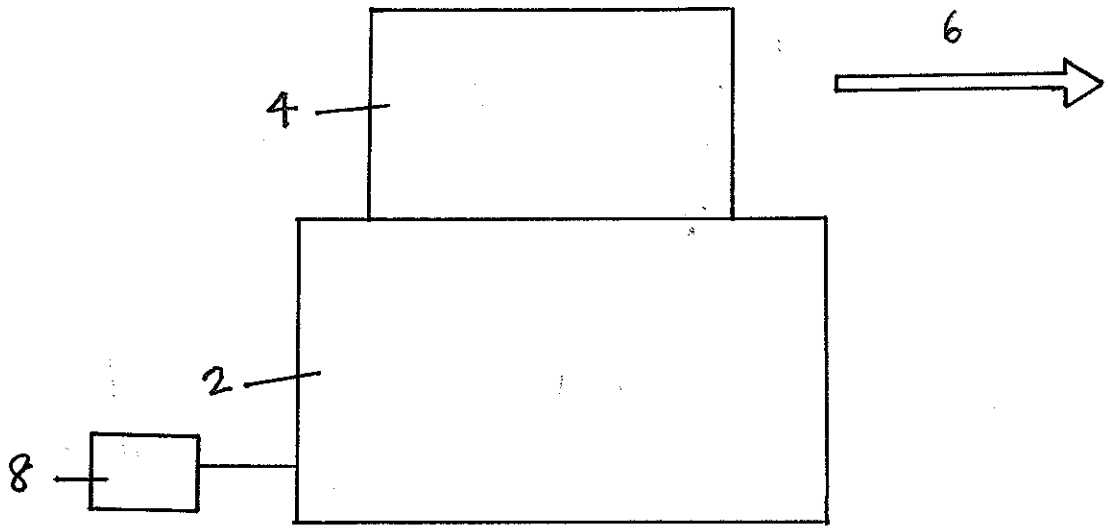

Figure 1

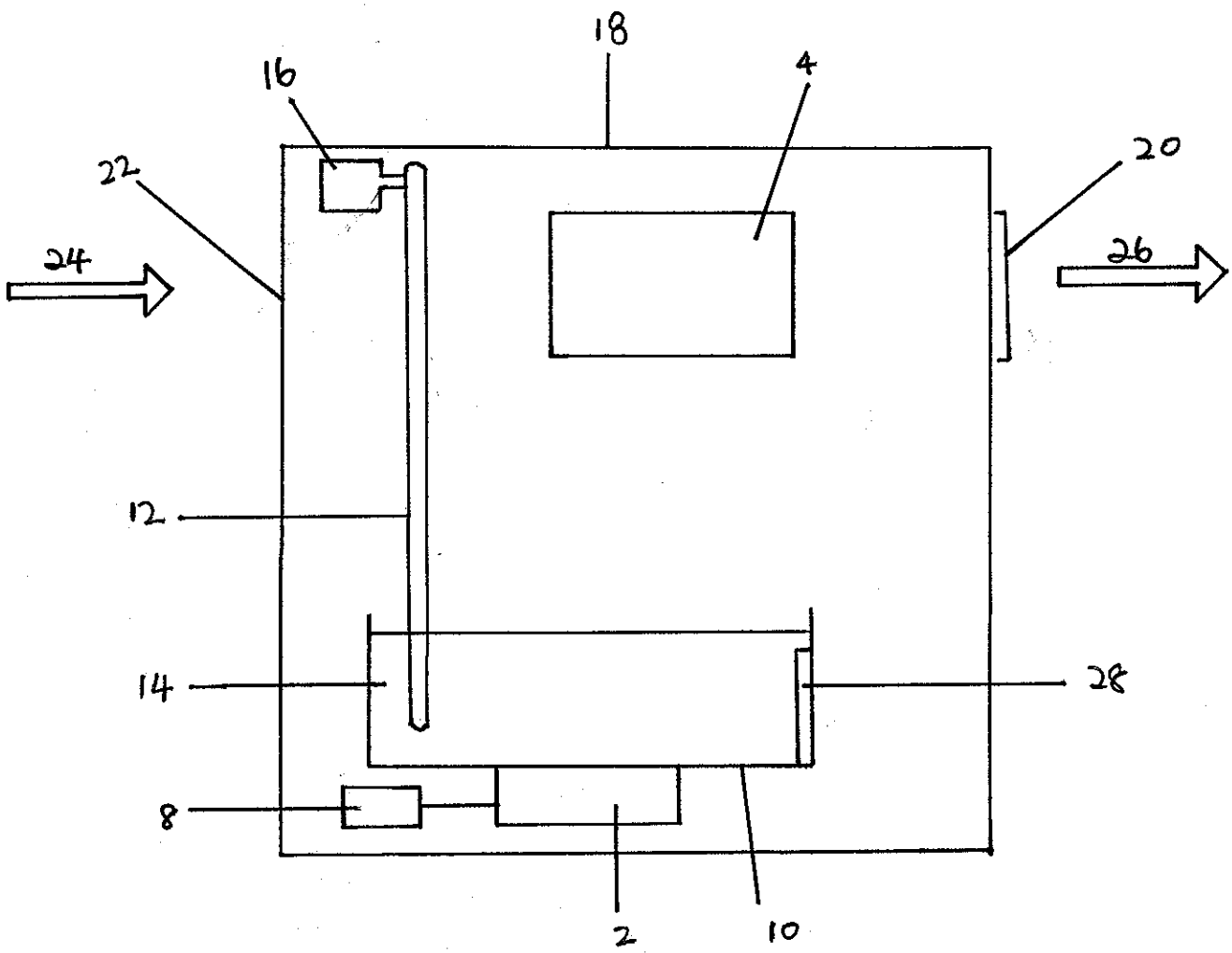

Figure 2

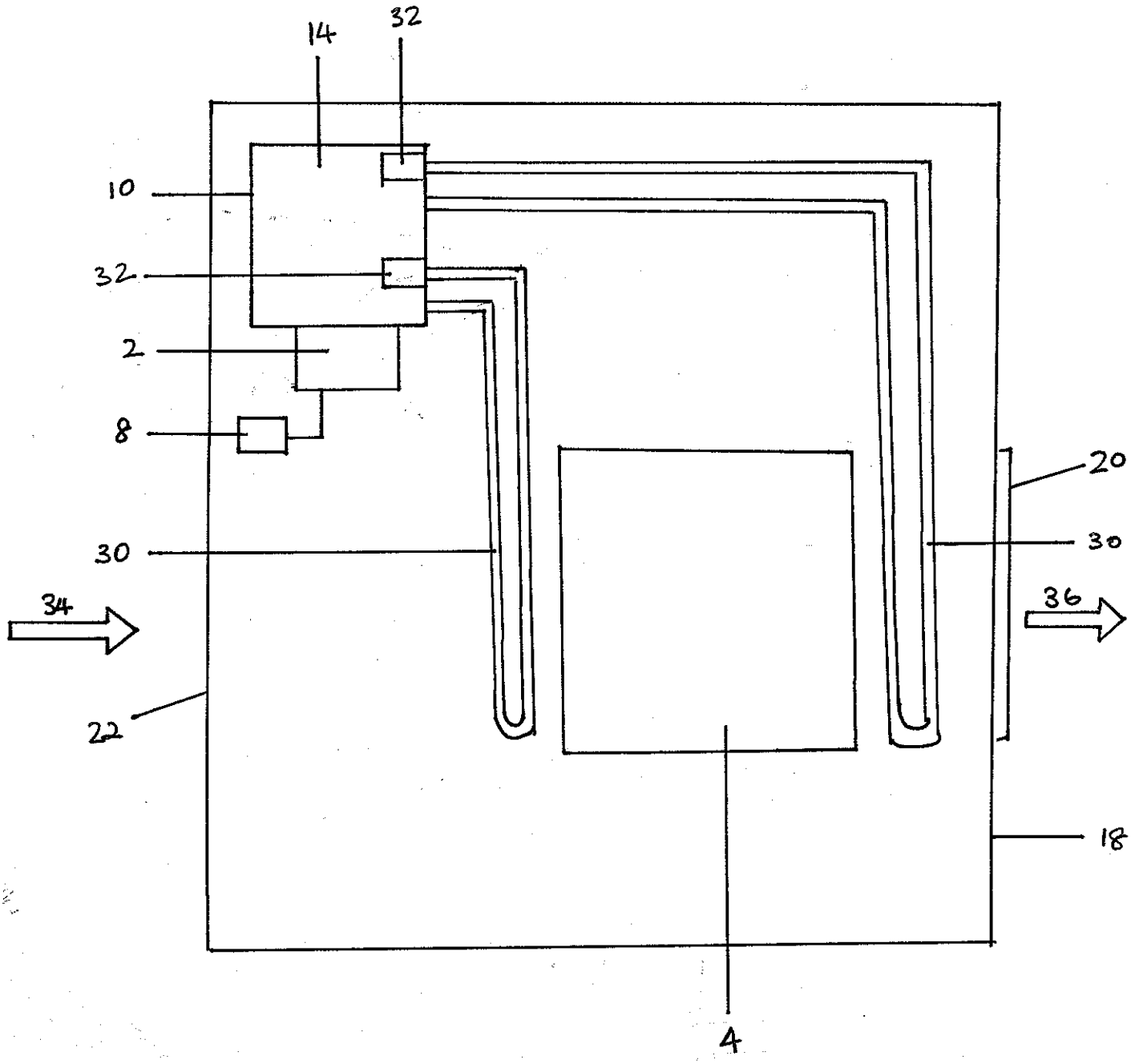

Figure 3

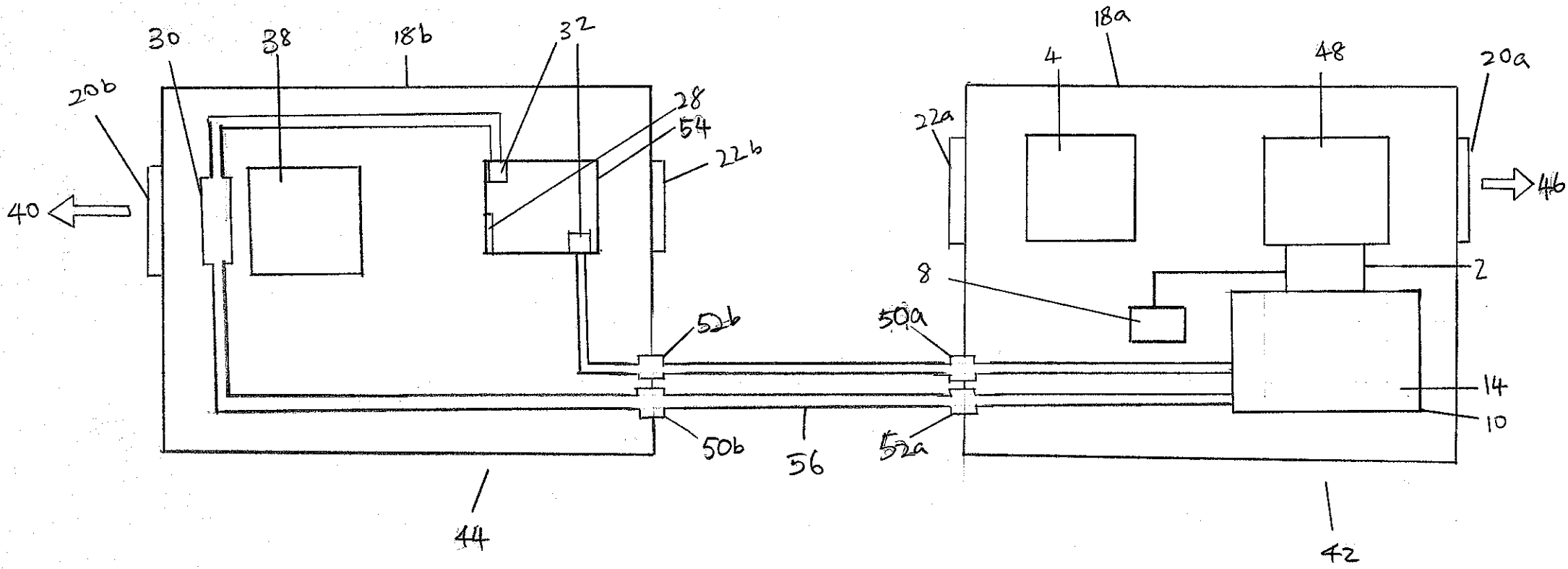
30
38
18b
32
20b
28
54
22b
40
18a
4
48
20a
22a
46
8
2
50a
52b
14
10
50b
56
52a
44
42

Figure 4

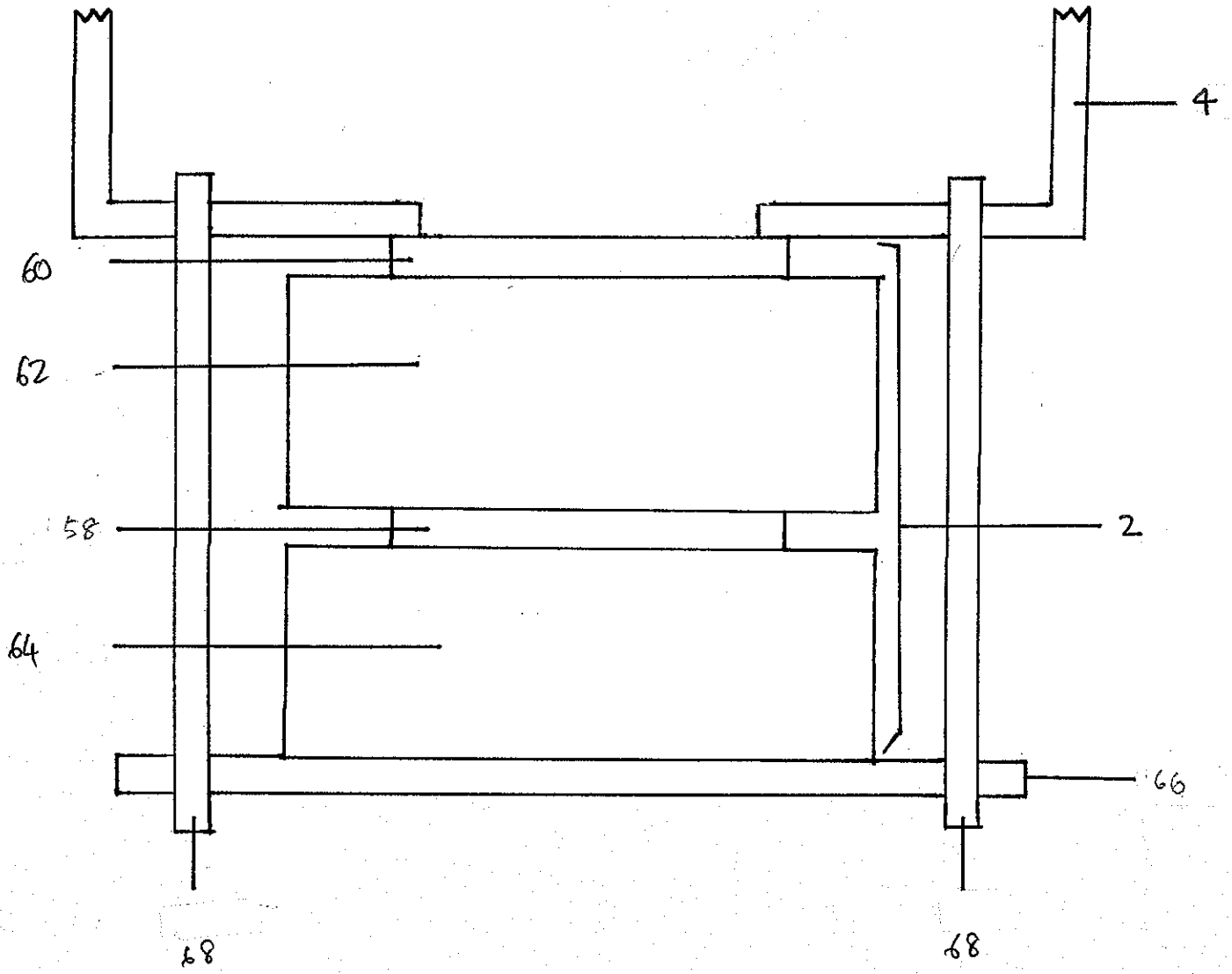

Figure 5

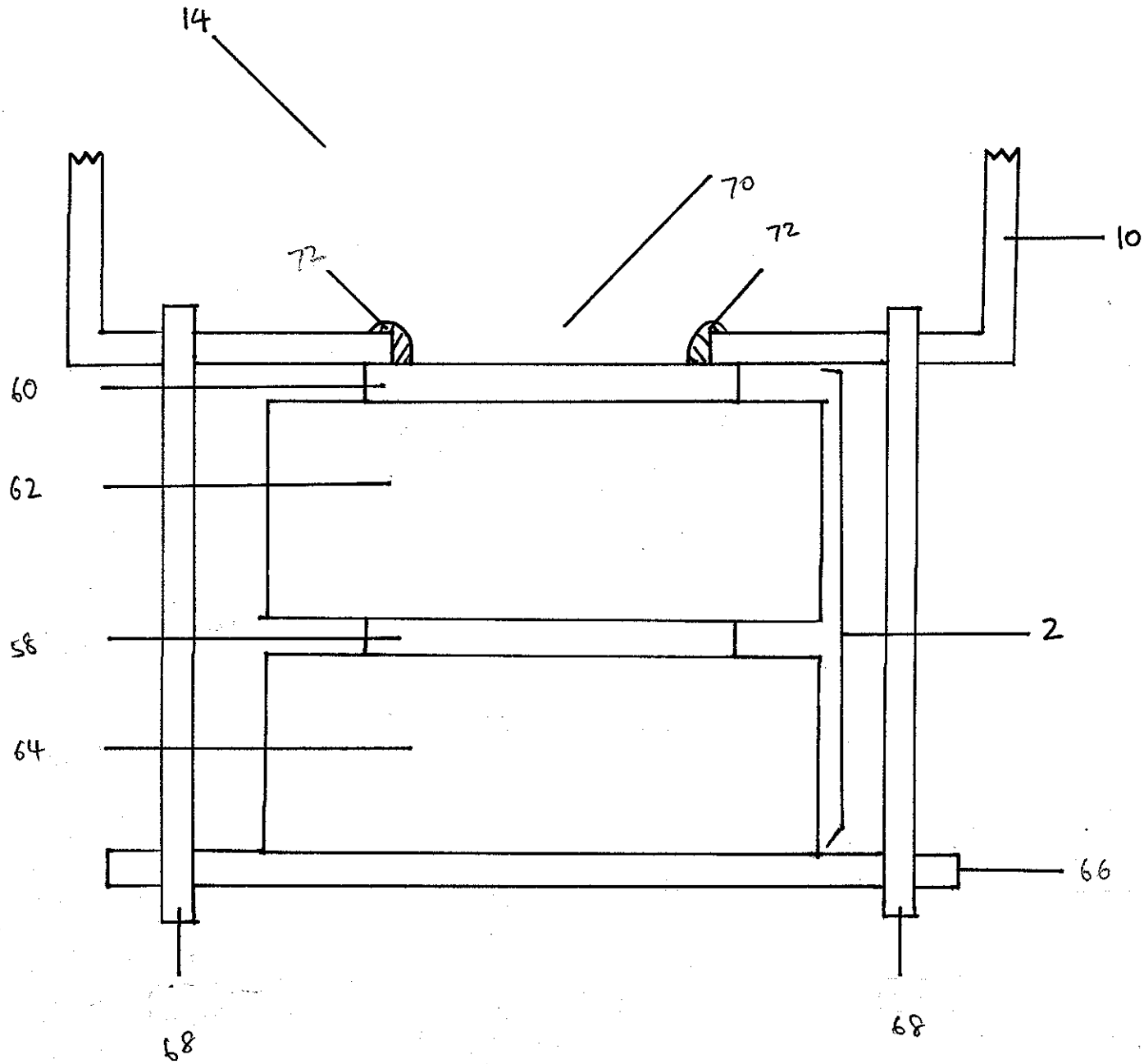

Figure 6

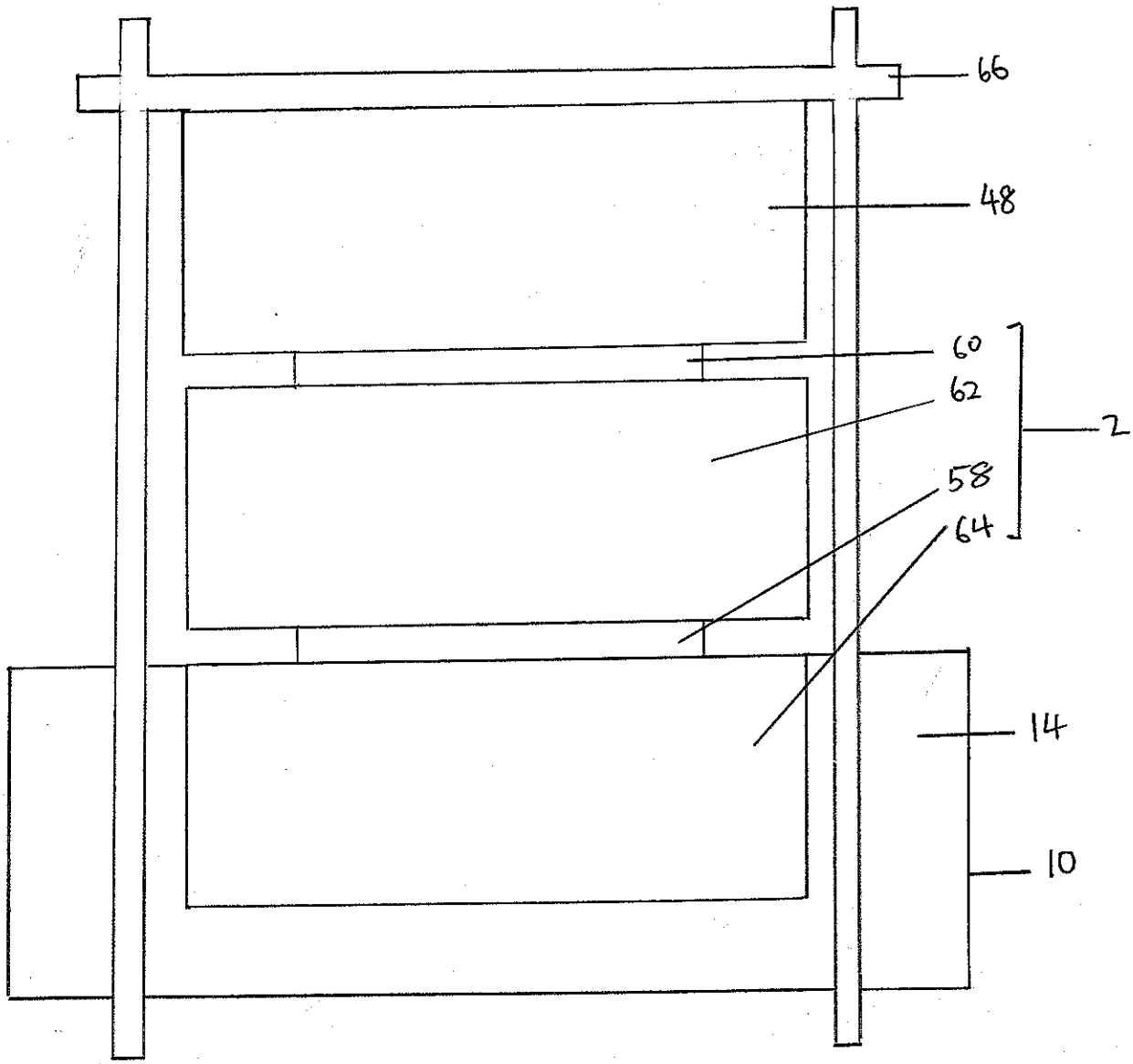

Figure 7

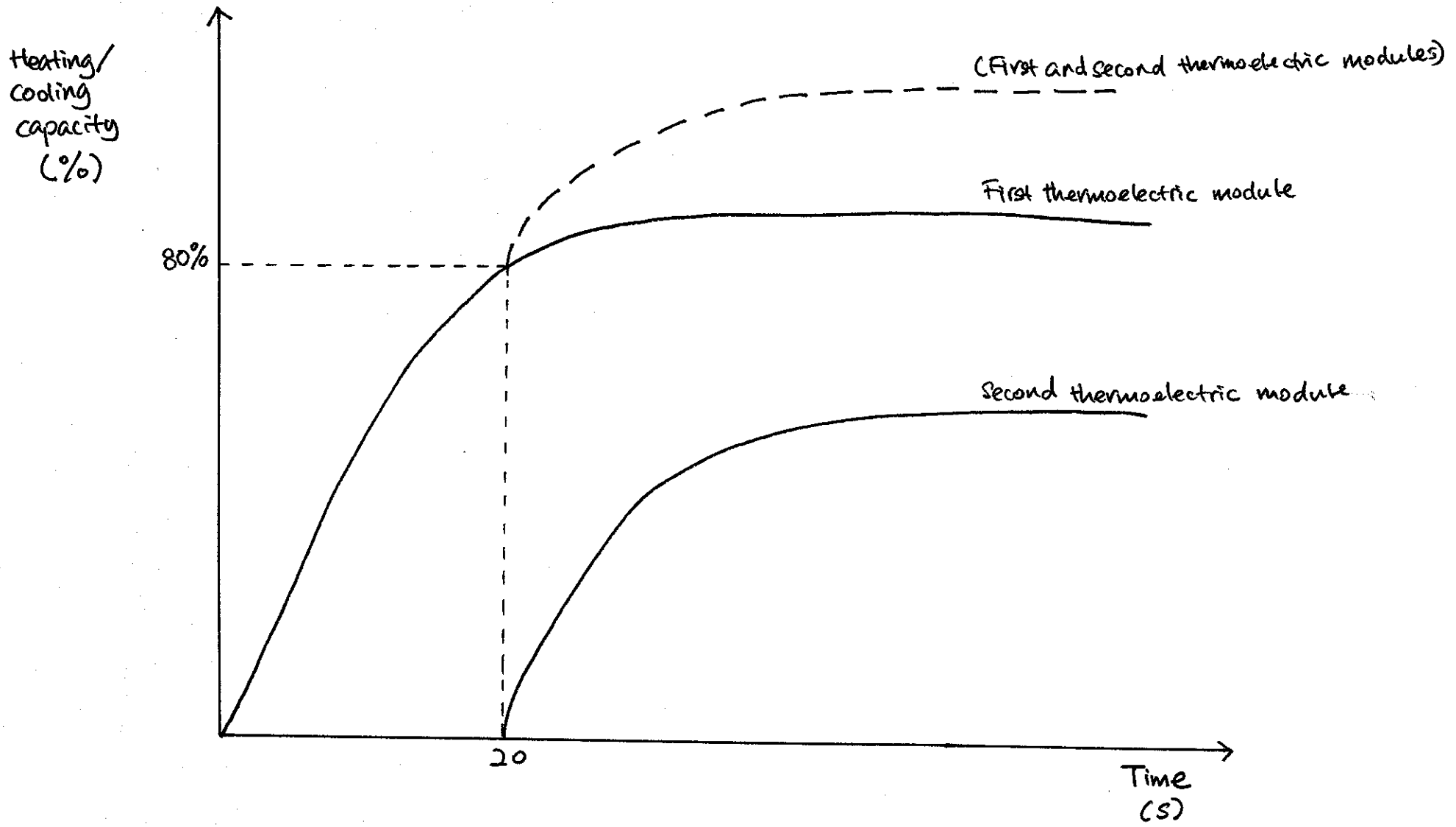
Heating/
cooling
capacity
(%)
80%
(First and second thermoelectric modules)
First thermoelectric module
Second thermoelectric module
20
Time
(s)

Figure 8

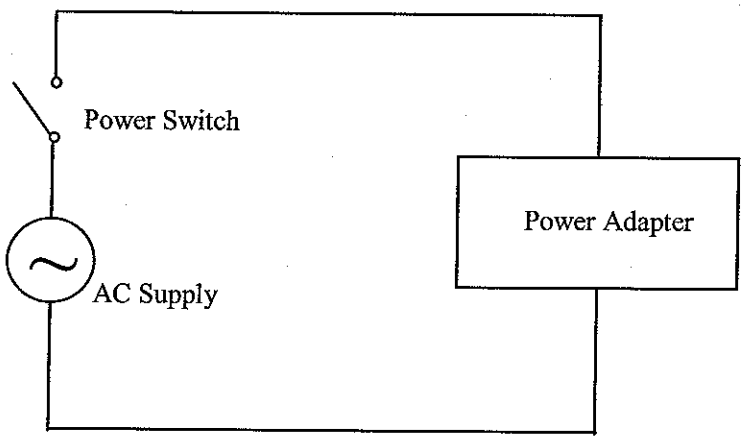

Figure 9

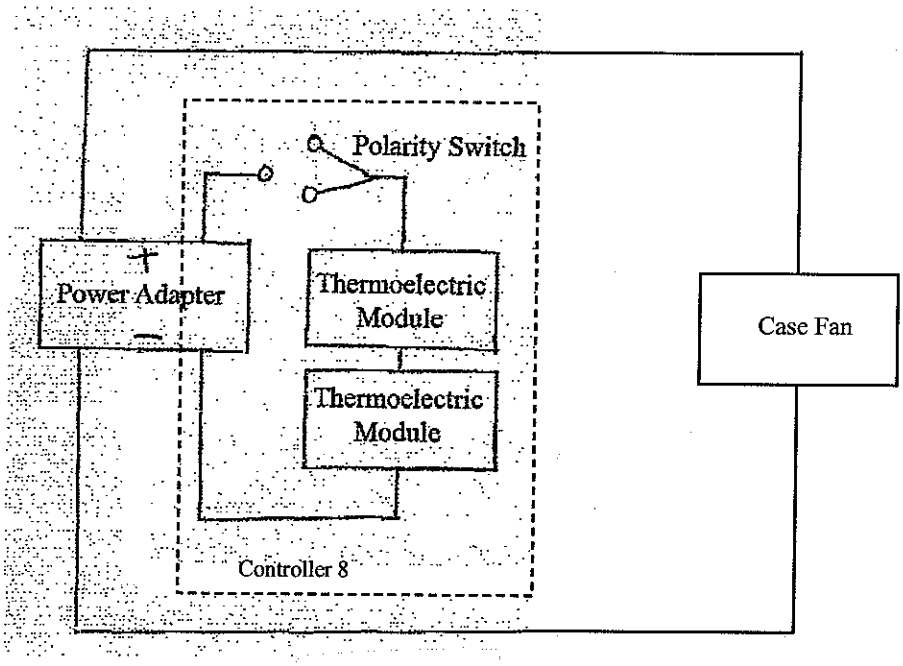

Figure 10

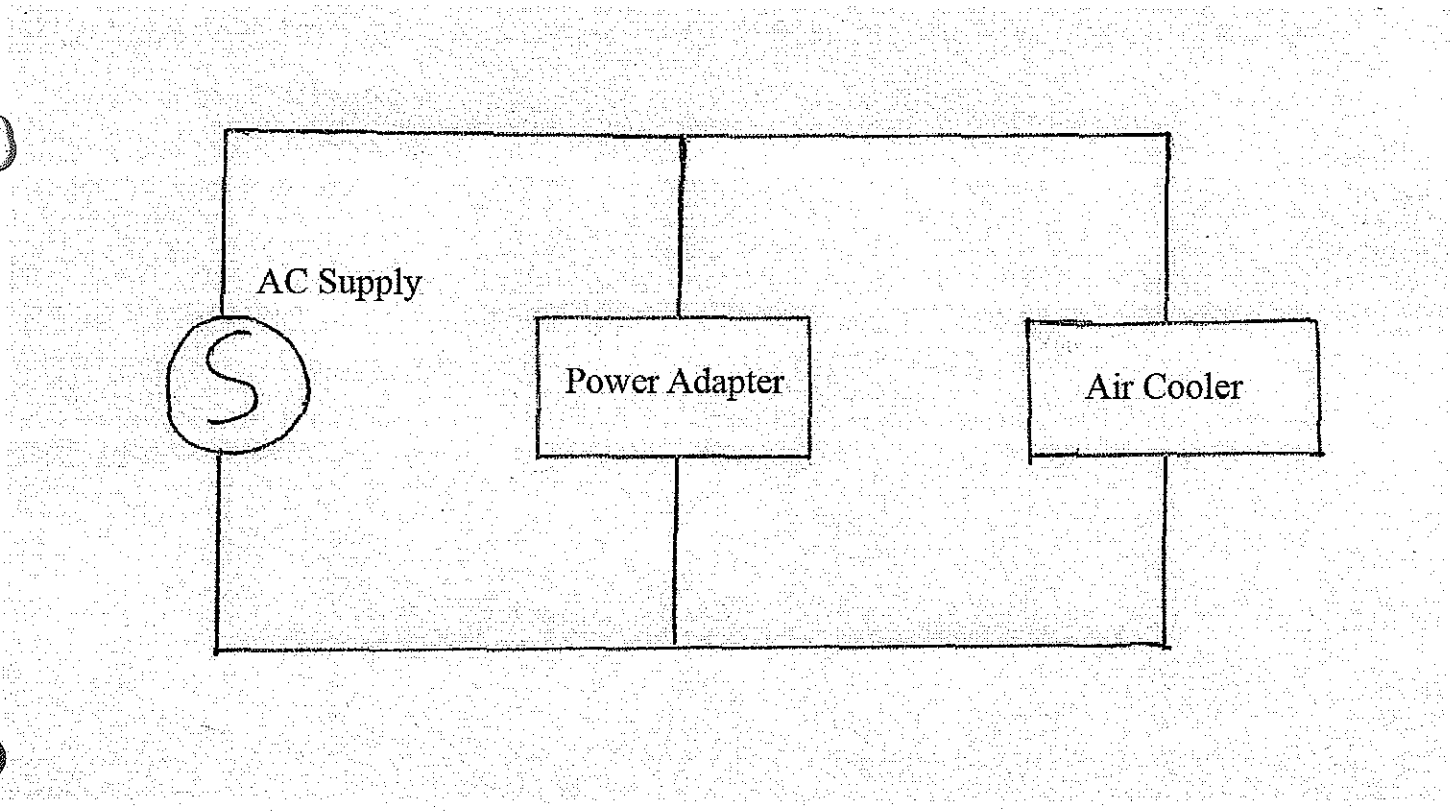

Figure 11

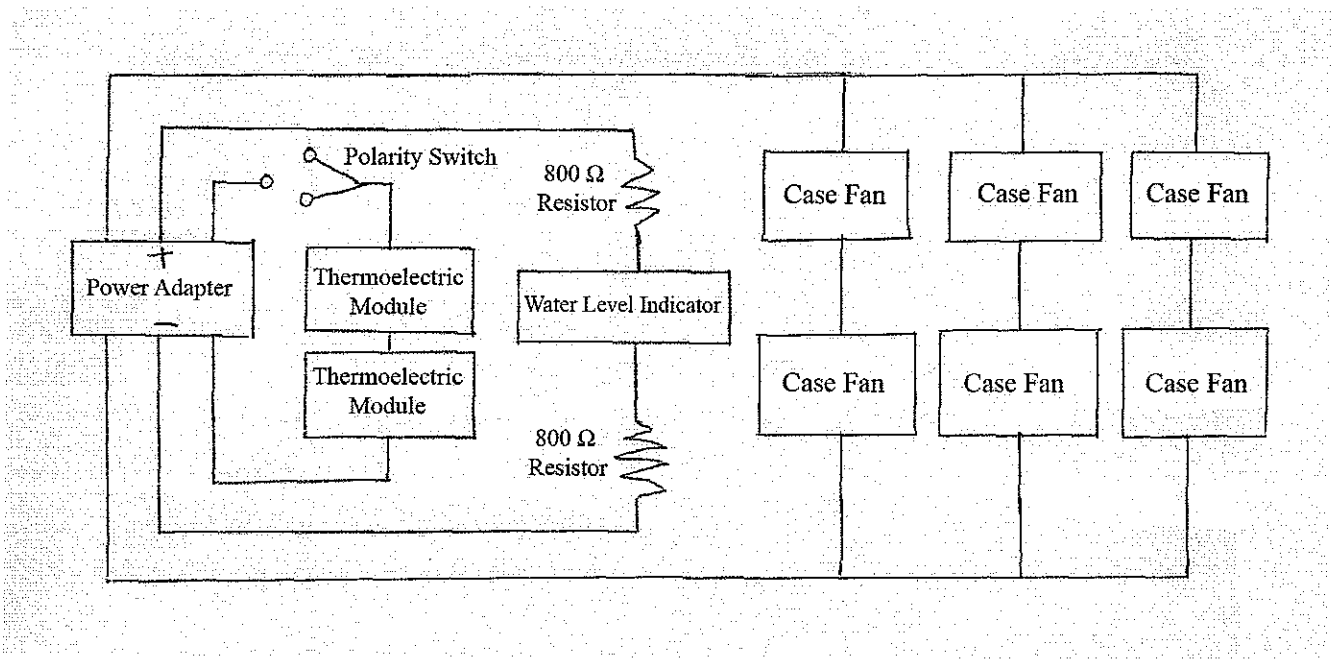
Polarity Switch
800 Ω
Resistor
Case Fan
Case Fan
Case Fan
+
Power Adapter
−
Thermoelectric
Module
Water Level Indicator
Thermoelectric
Module
Case Fan
Case Fan
Case Fan
800 Ω
Resistor

Figure 12

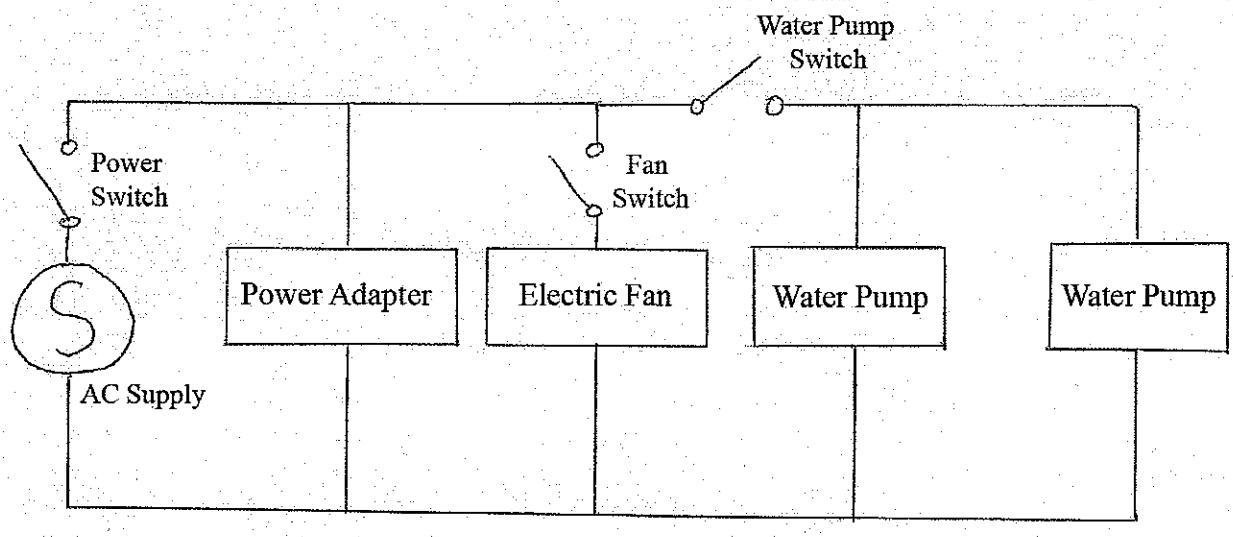
Water Pump
Switch
Power
Switch
Fan
Switch
S
Power Adapter
Electric Fan
Water Pump
Water Pump
AC Supply

Figure 13

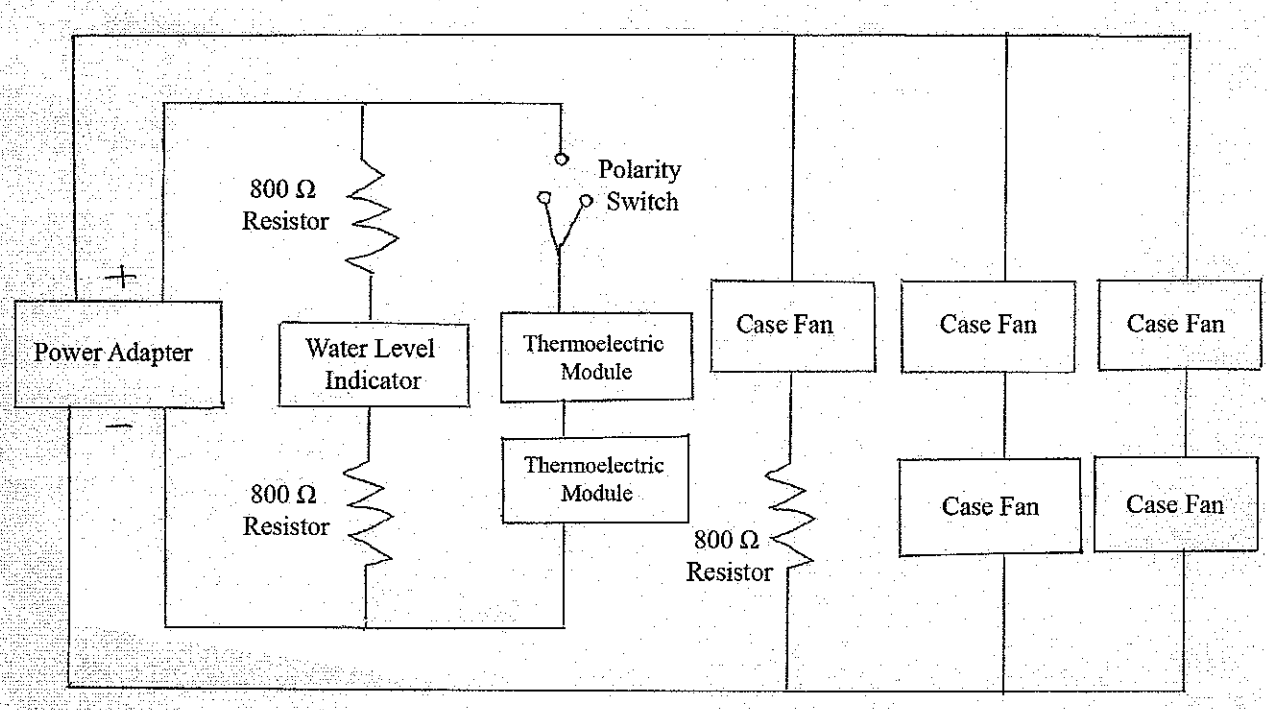
800 Ω
Resistor
Polarity
Switch
+
Power Adapter
−
Water Level
Indicator
Thermoelectric
Module
Case Fan
Case Fan
Case Fan
800 Ω
Resistor
Thermoelectric
Module
800 Ω
Resistor
Case Fan
Case Fan

Figure 14

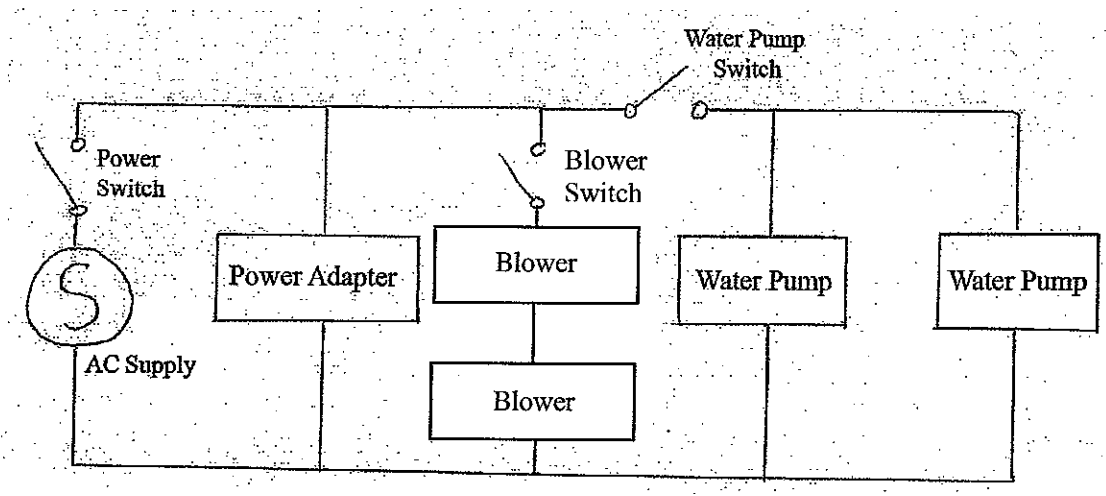

Figure 15

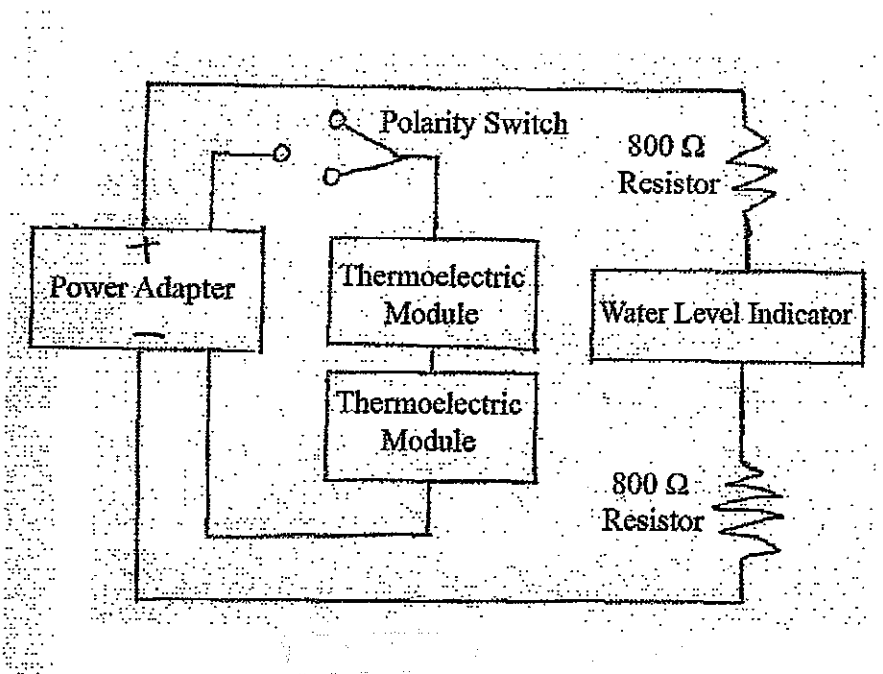

Figure 16