Fig. 1

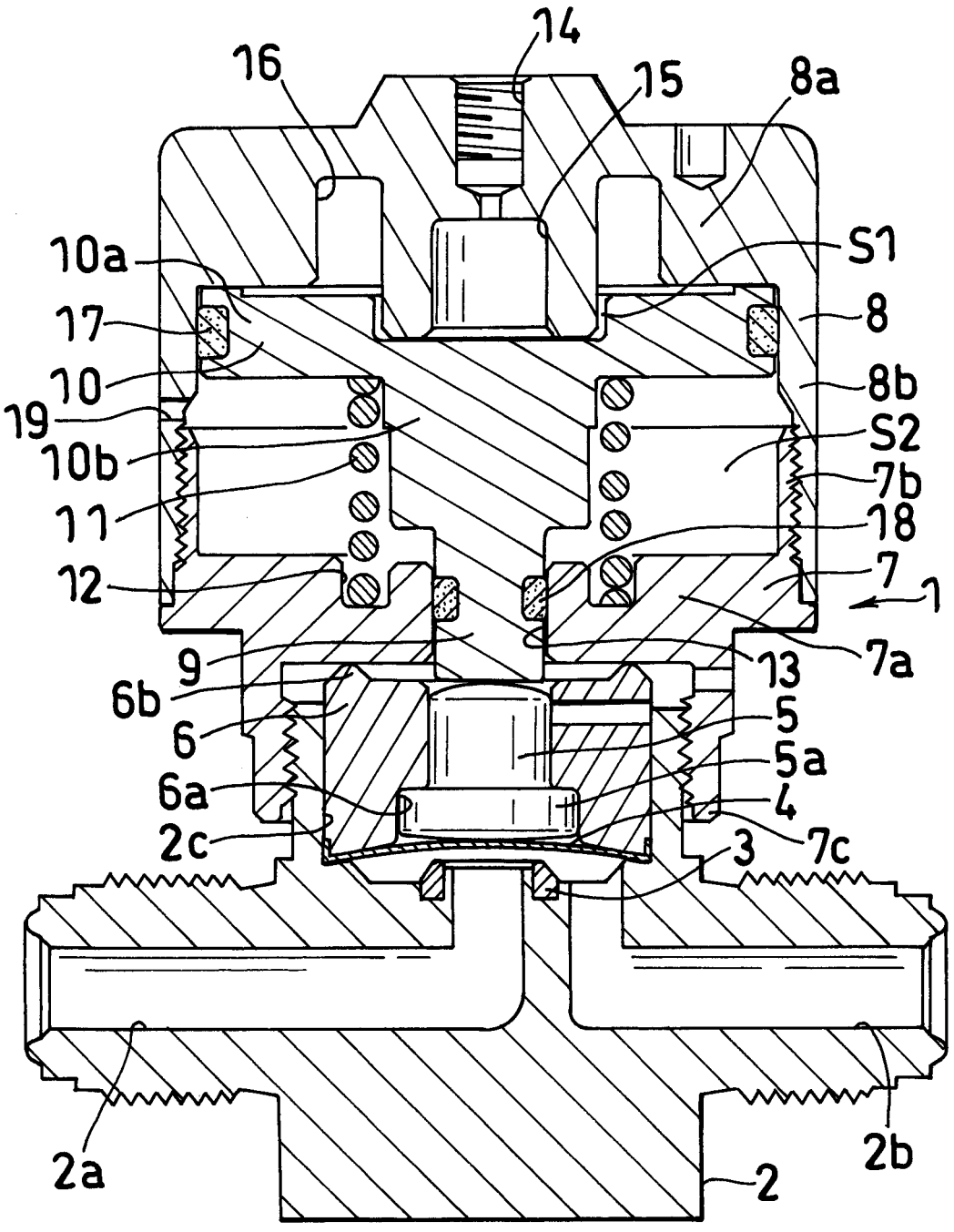
14
16
15
8a
10a
S1
17
8
10
8b
19
S2
10b
7b
11
18
12
7
1
9
13
7a
6b
5
6
5a
6a
4
2c
3
7c
2a
2b
2

Fig. 2

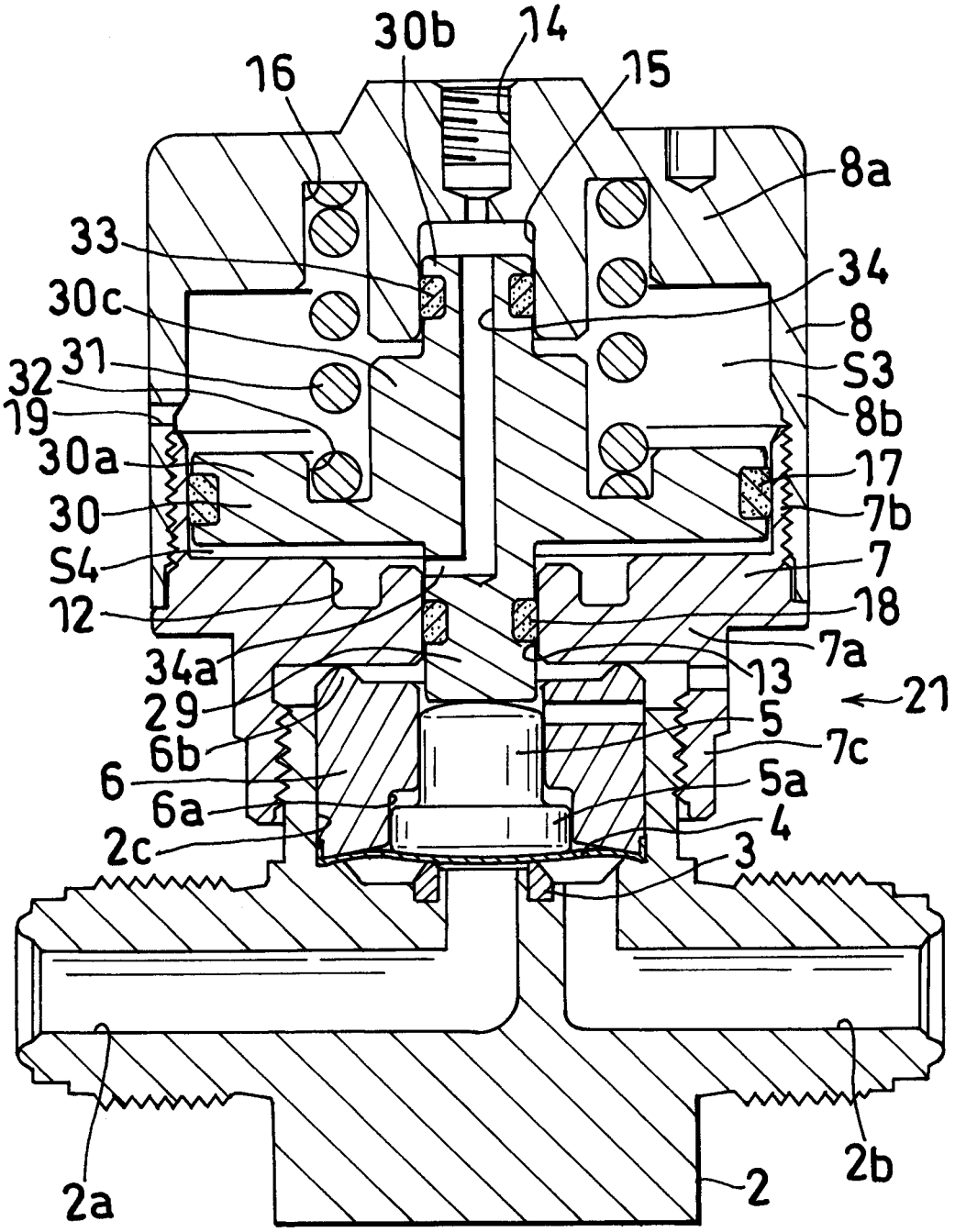
30b
14
16
15
8a
33
34
30c
8
31
S3
32
8b
19
17
30a
7b
30
7
S4
18
12
7a
34a
13
21
29
5
6b
7c
6
5a
6a
4
2c
3
2a
2b
2