Figure 1

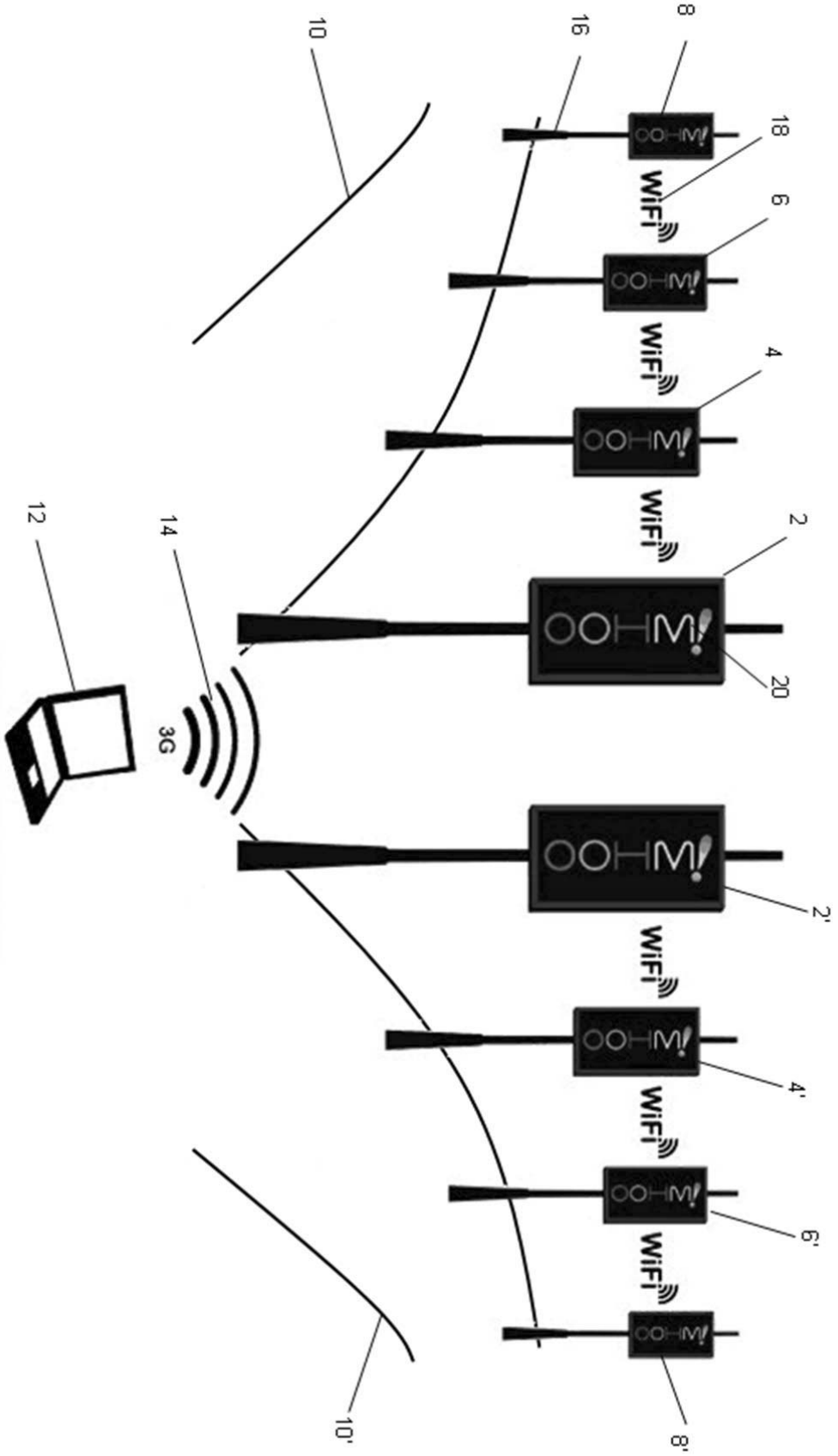

Figure 2

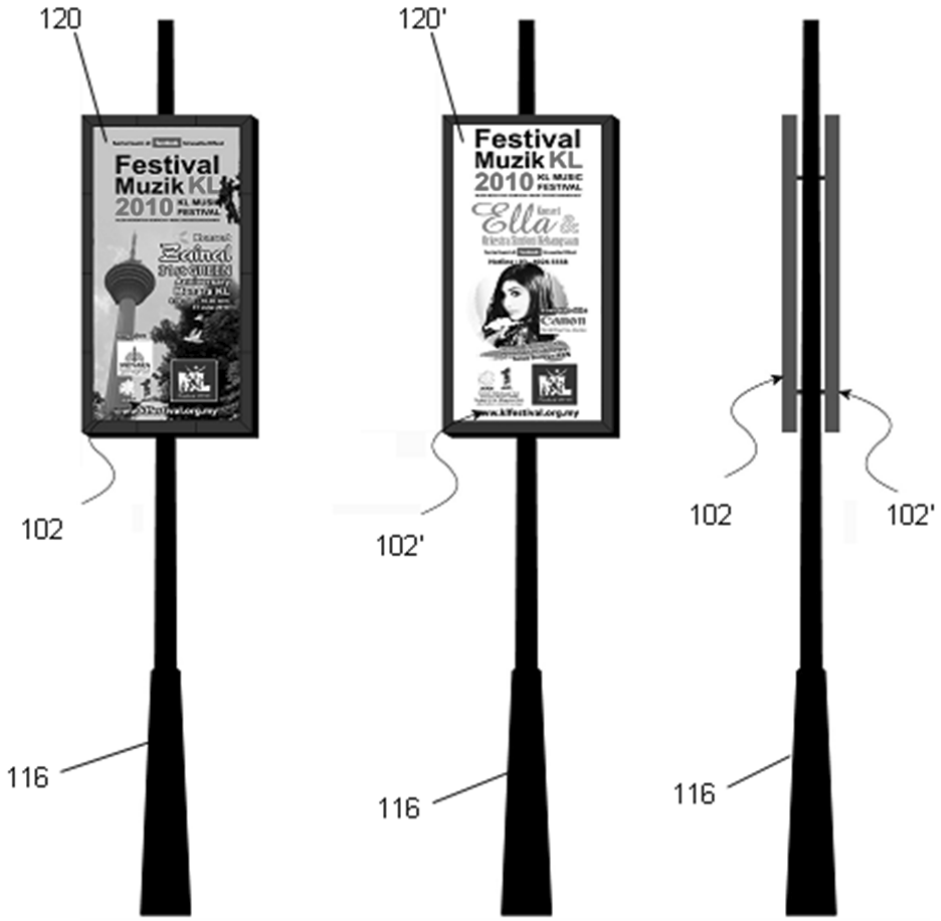

Figure 3

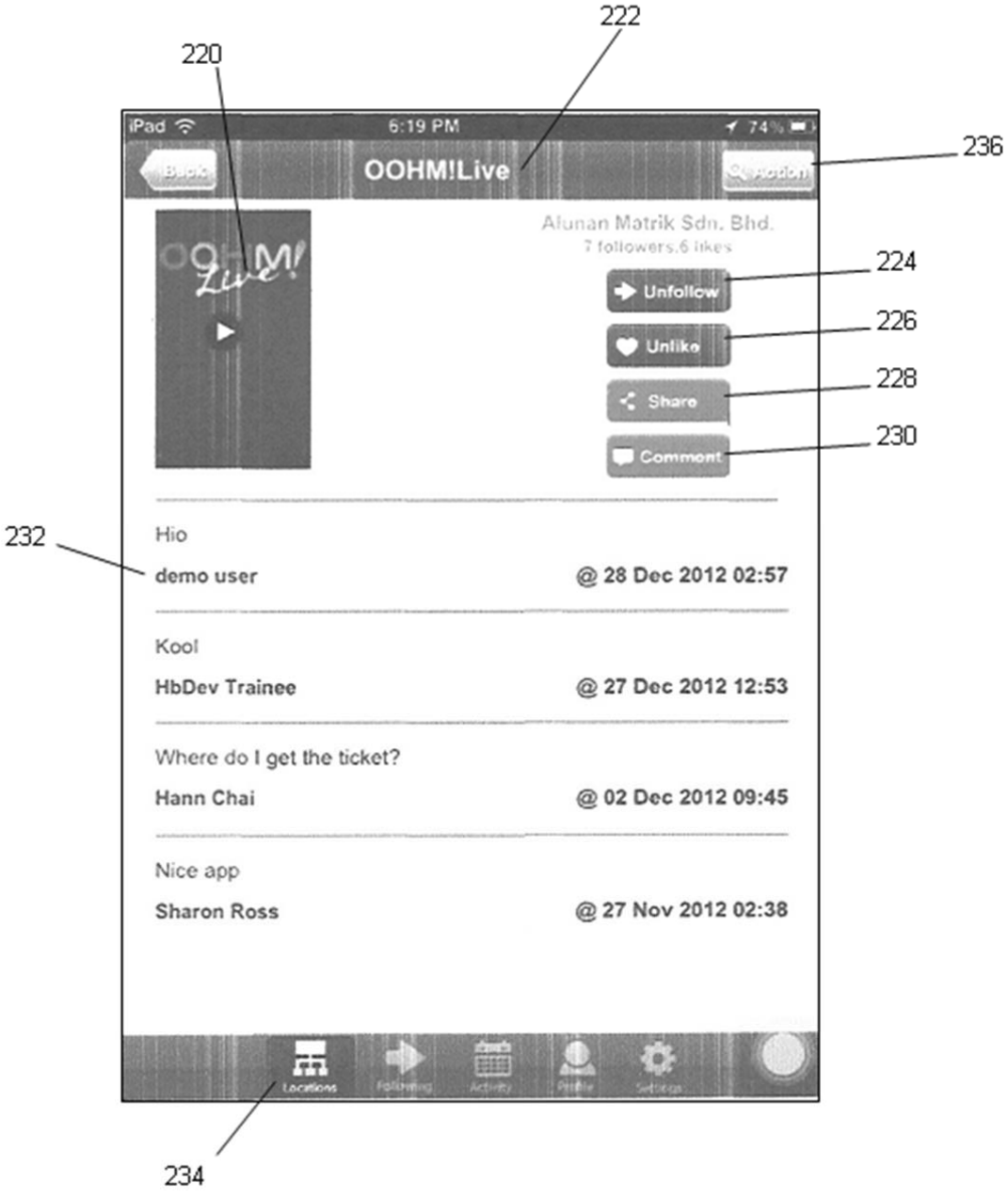
220
222
236
iPad
6:19 PM
74%
Back
OOHM!Live
Skeleton
Alunan Matrik Sdn. Bhd.
7 followers,6 likes
224
Unfollow
226
Unlike
228
Share
230
Comment
232
Hio
demo user
@ 28 Dec 2012 02:57
Kool
HbDev Trainee
@ 27 Dec 2012 12:53
Where do I get the ticket?
Hann Chai
@ 02 Dec 2012 09:45
Nice app
Sharon Ross
@ 27 Nov 2012 02:38
Locations
Following
Activity
Profile
Settings
234

Figure 4

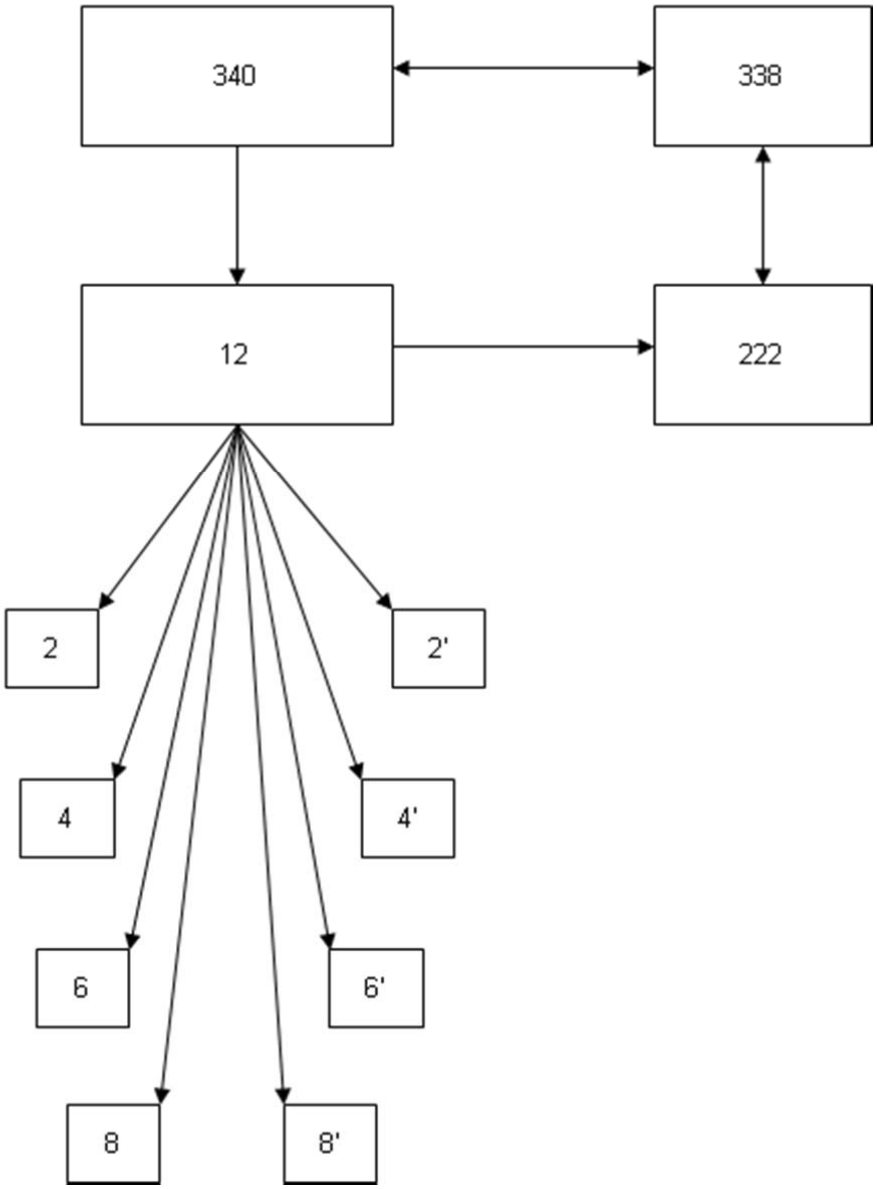

Figure 5

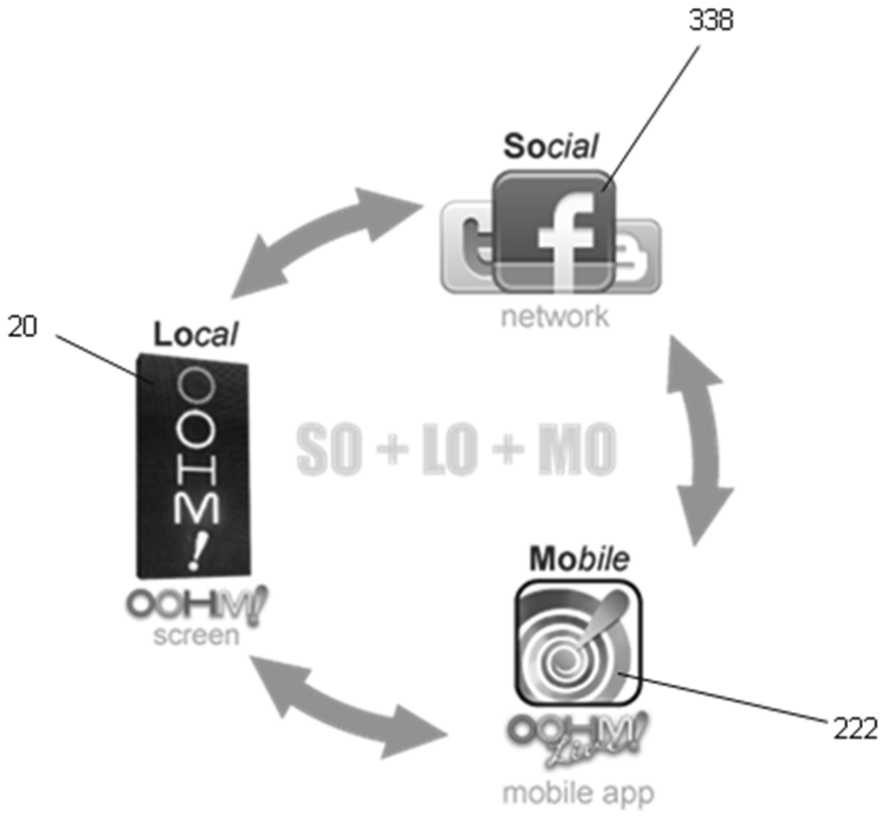
338
Social
network
20
Local
OOHM!
screen
SO + LO + MO
Mobile
222
mobile app