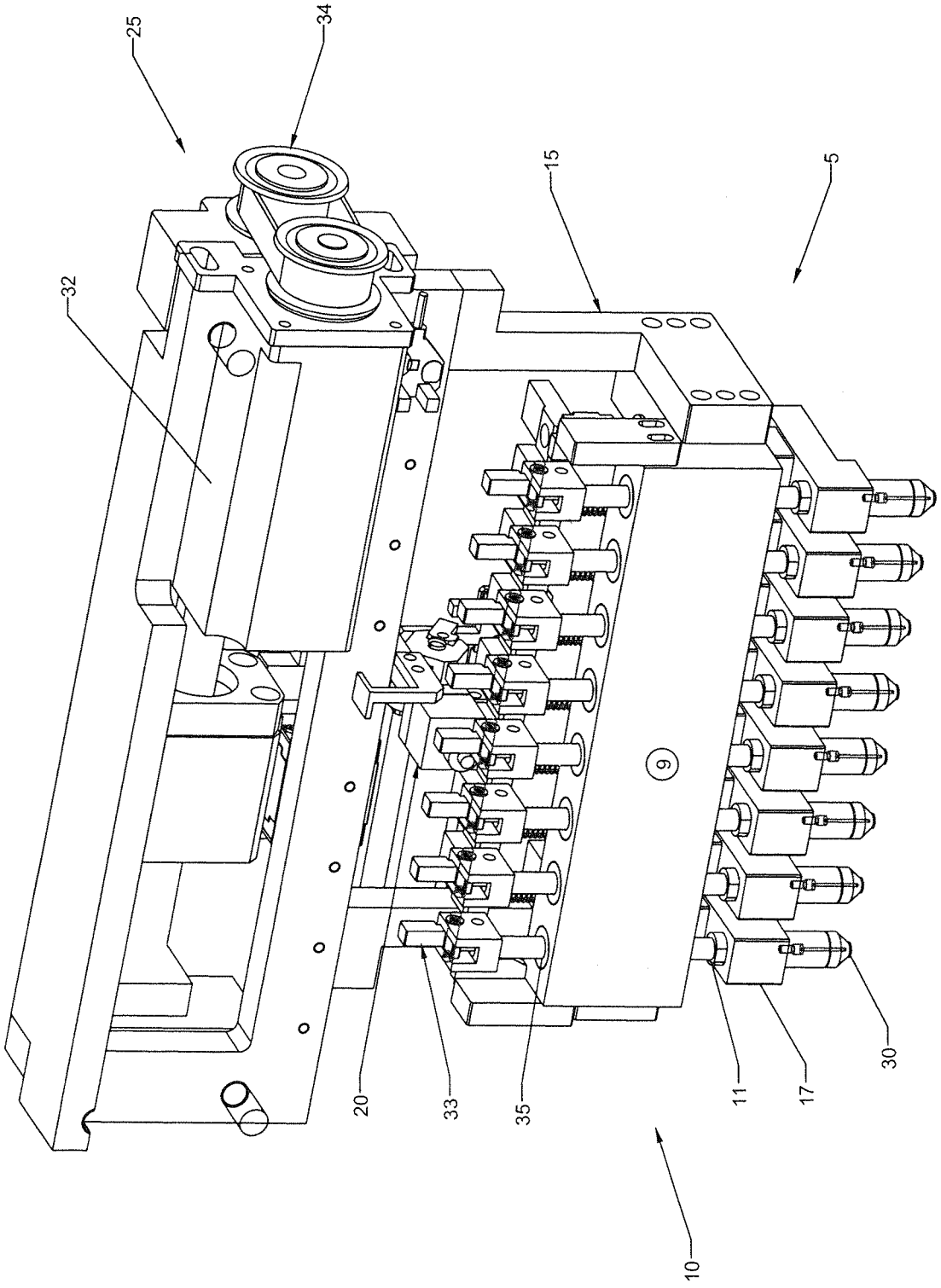

FIGURE 1A

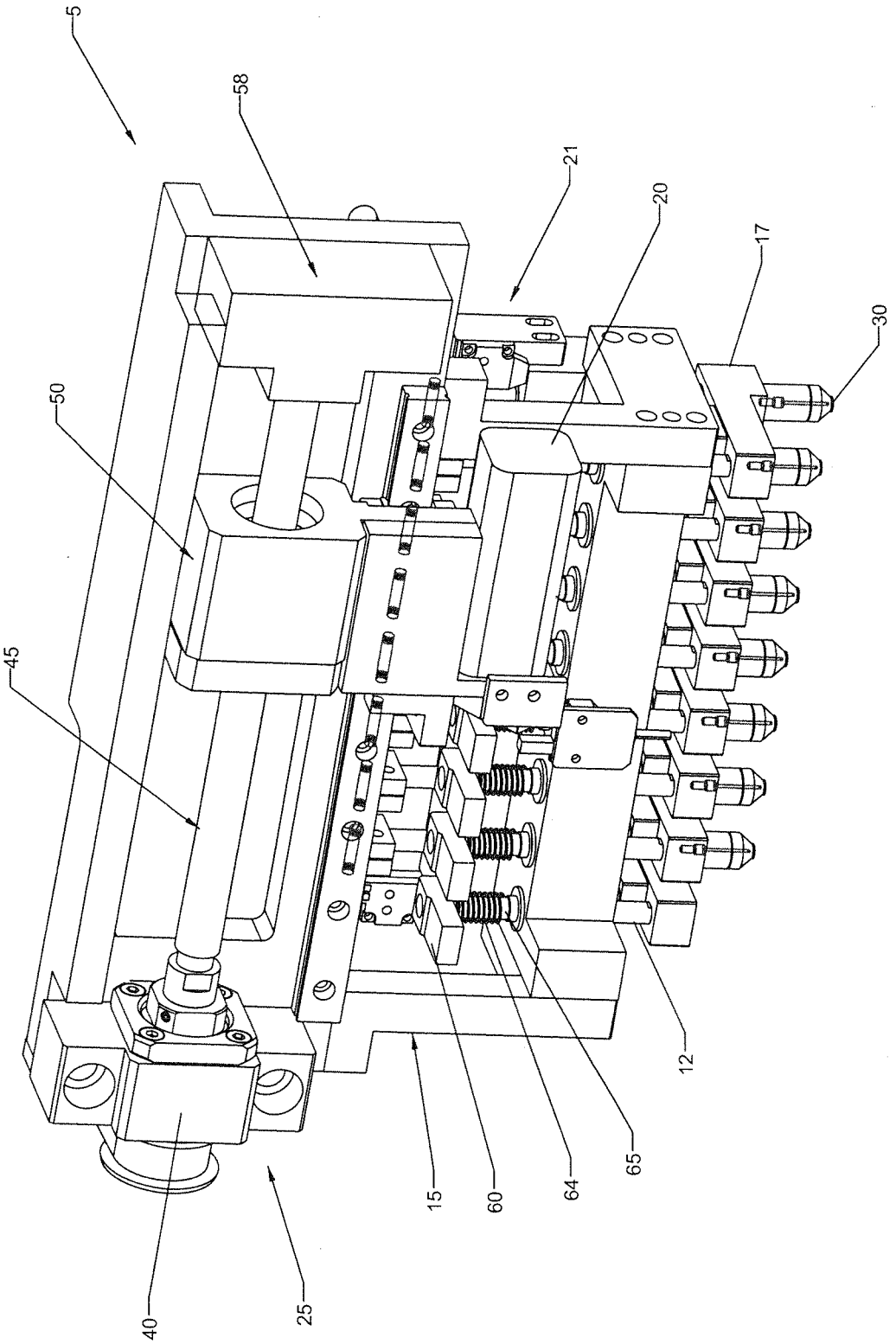

FIGURE 1B

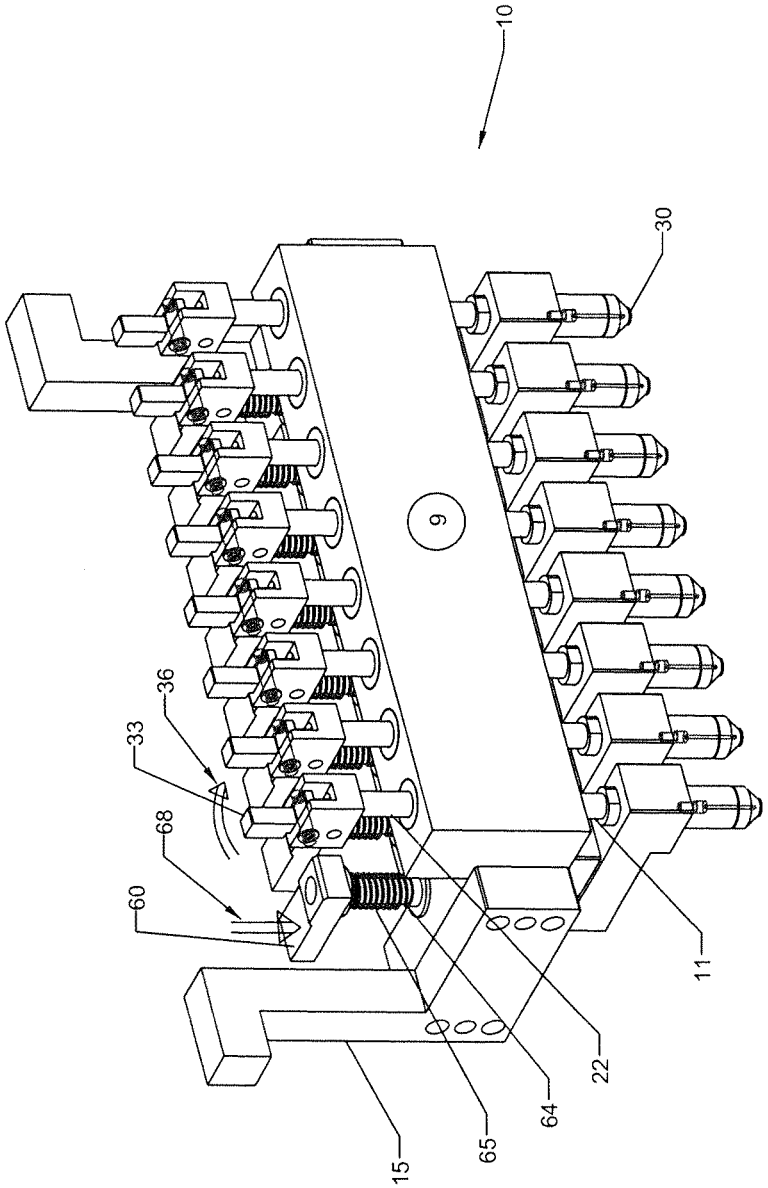

FIGURE 1C

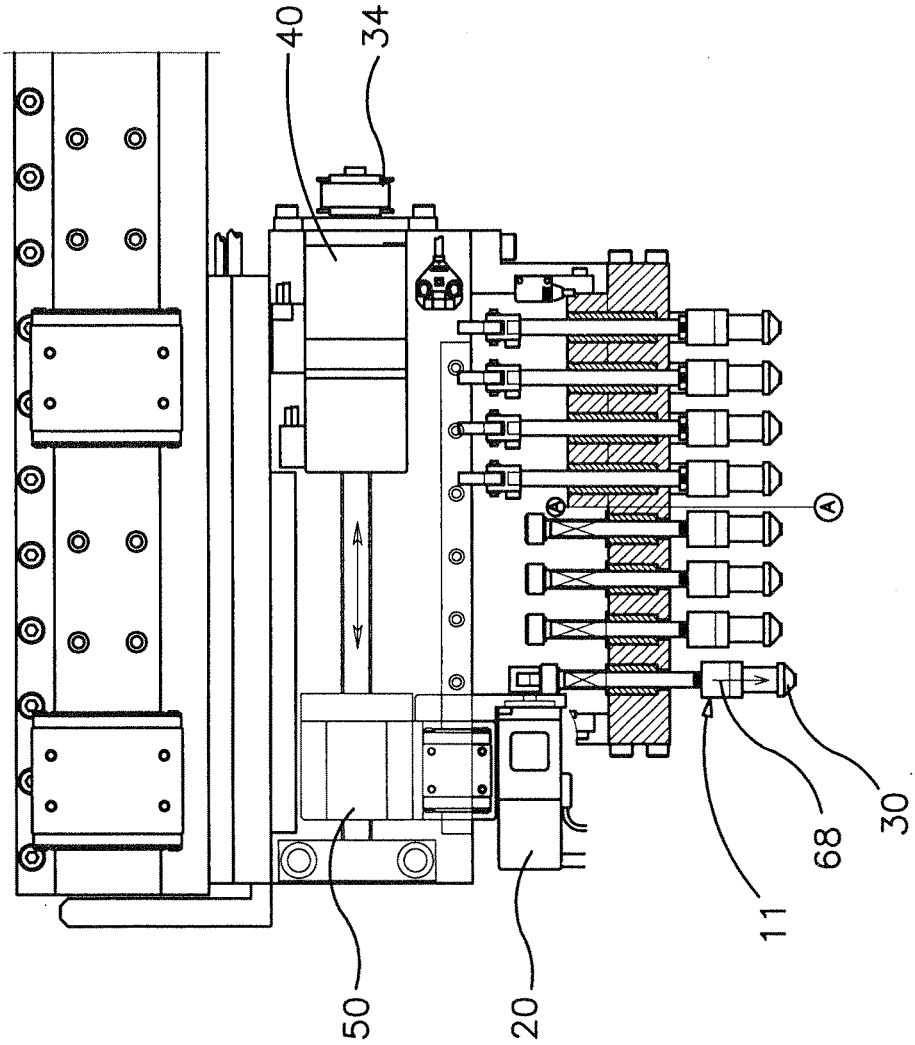

FIGURE 2B

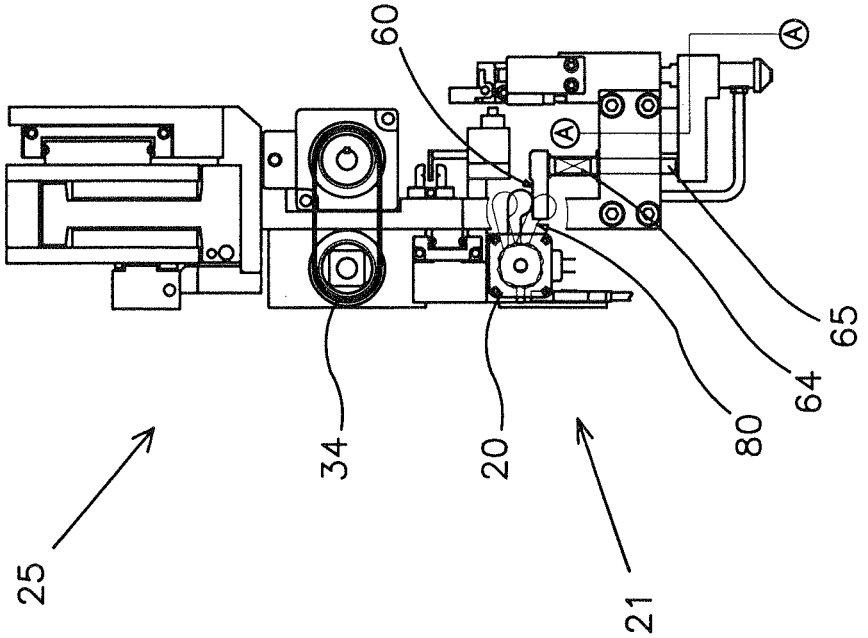

FIGURE 2A

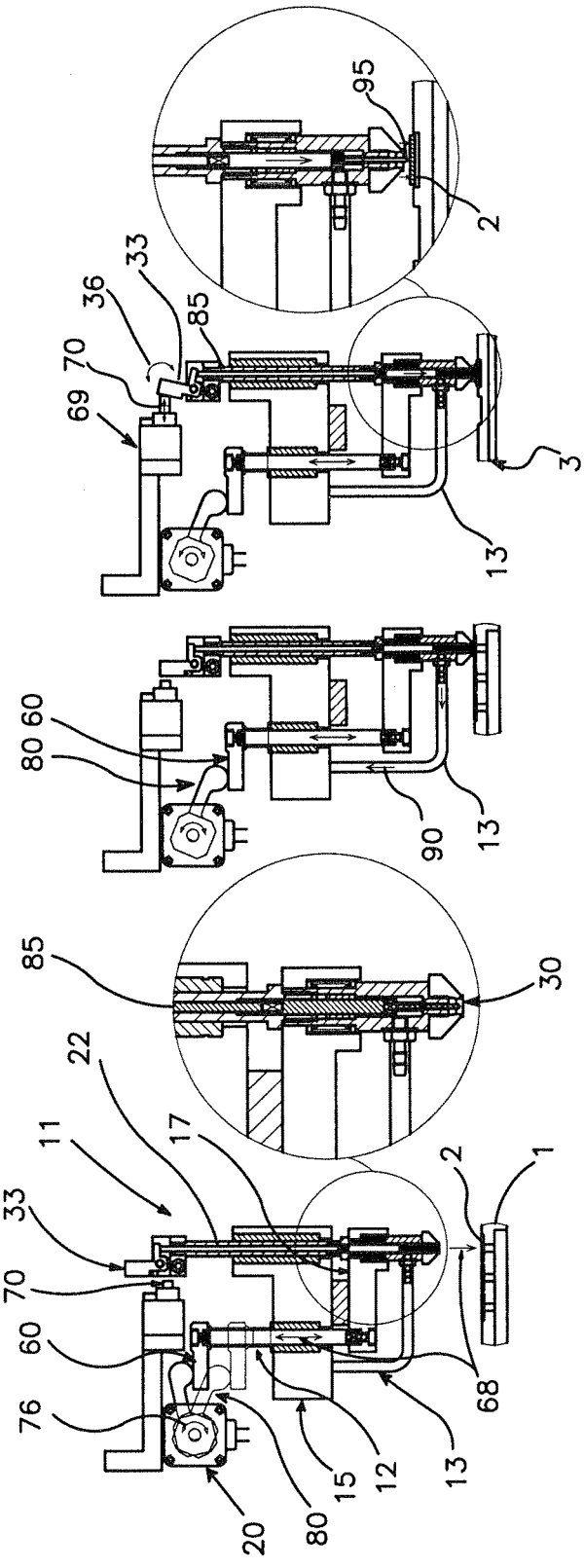

FIGURE 3C

FIGURE 3B

FIGURE 3A

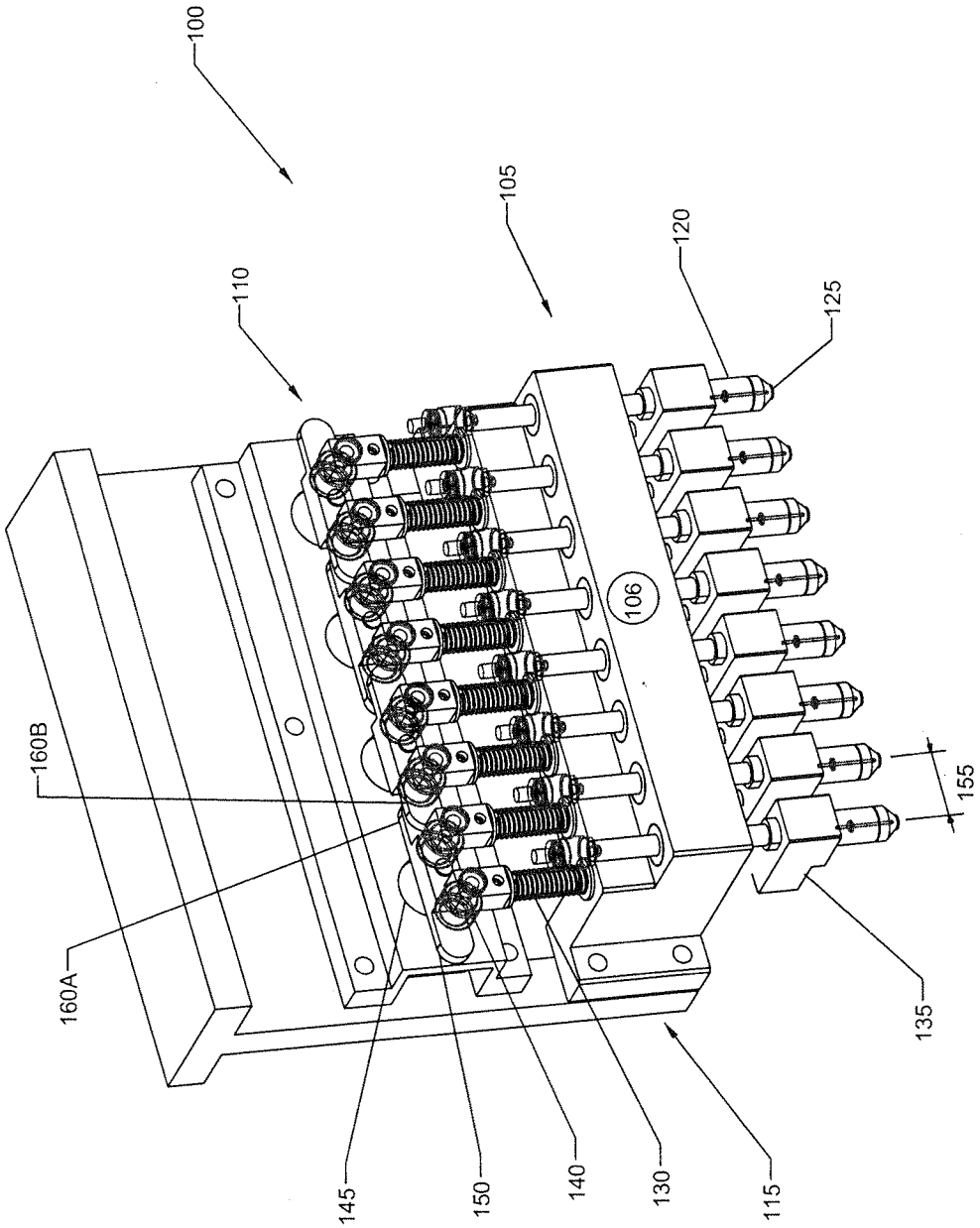

FIGURE 4A

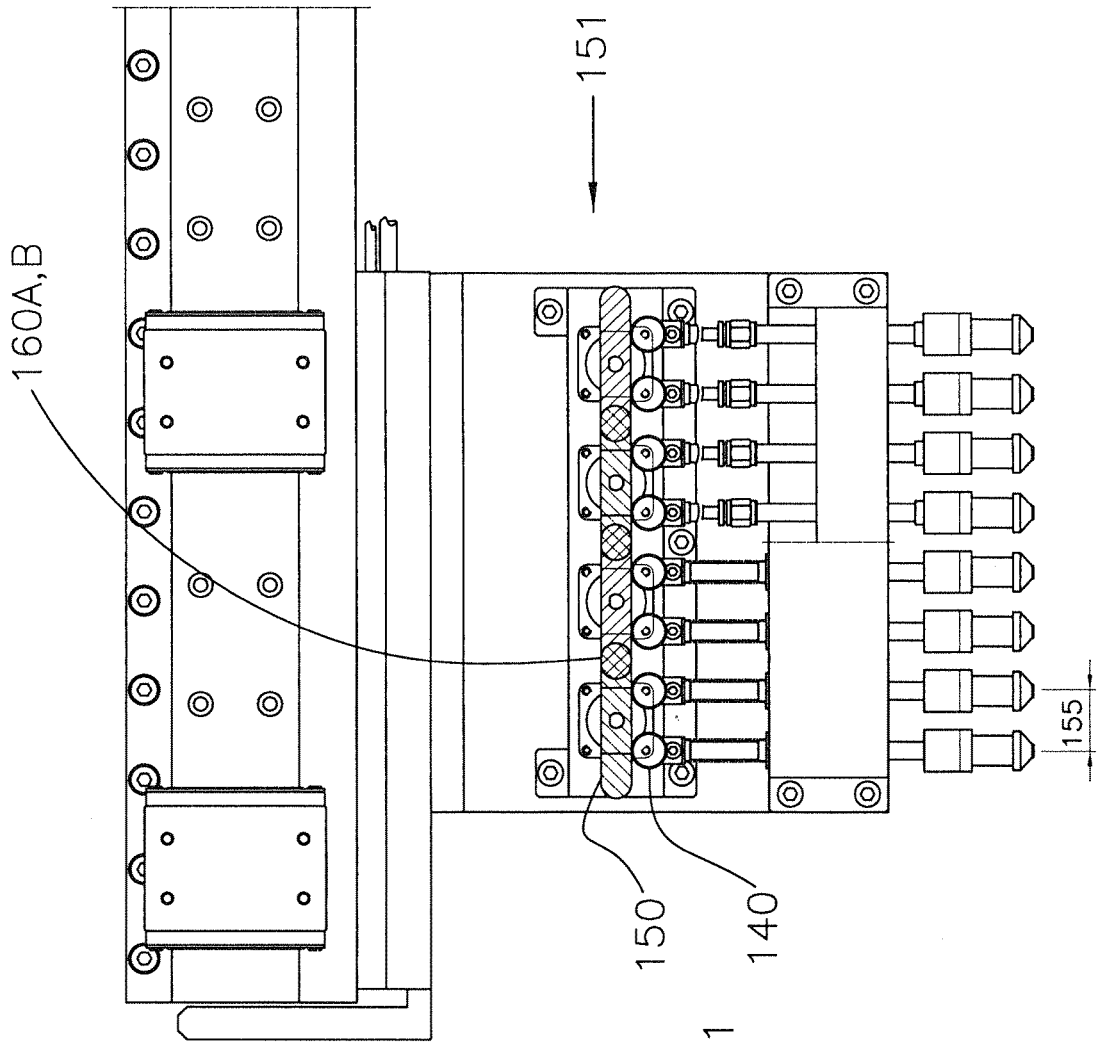

FIGURE 4C

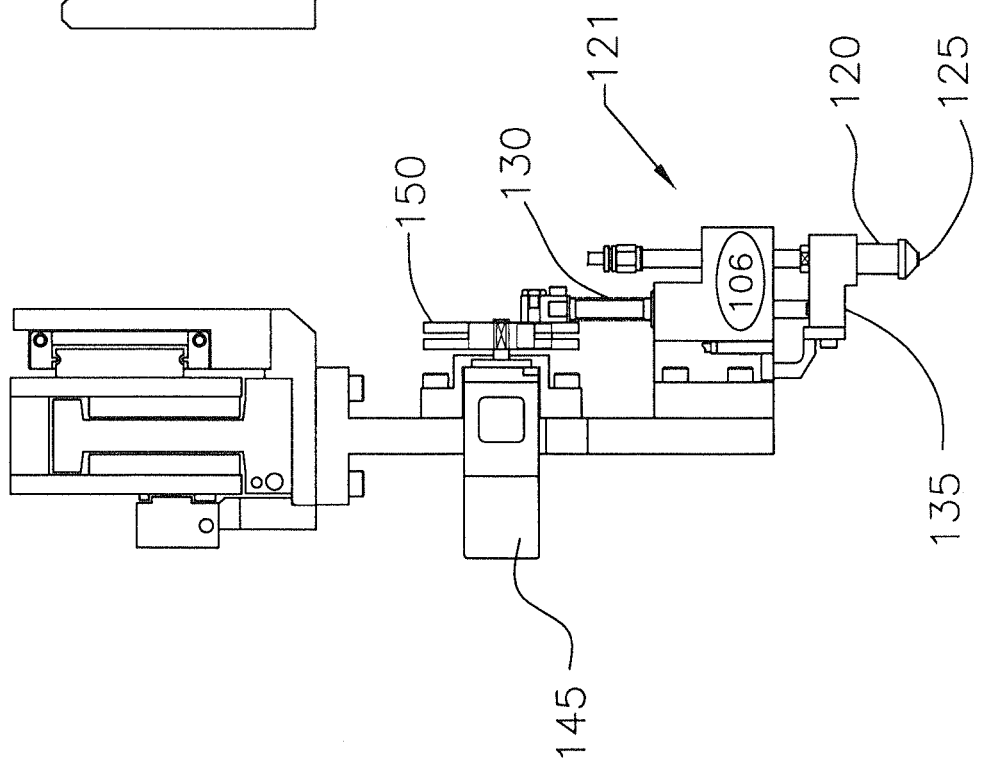

FIGURE 4B

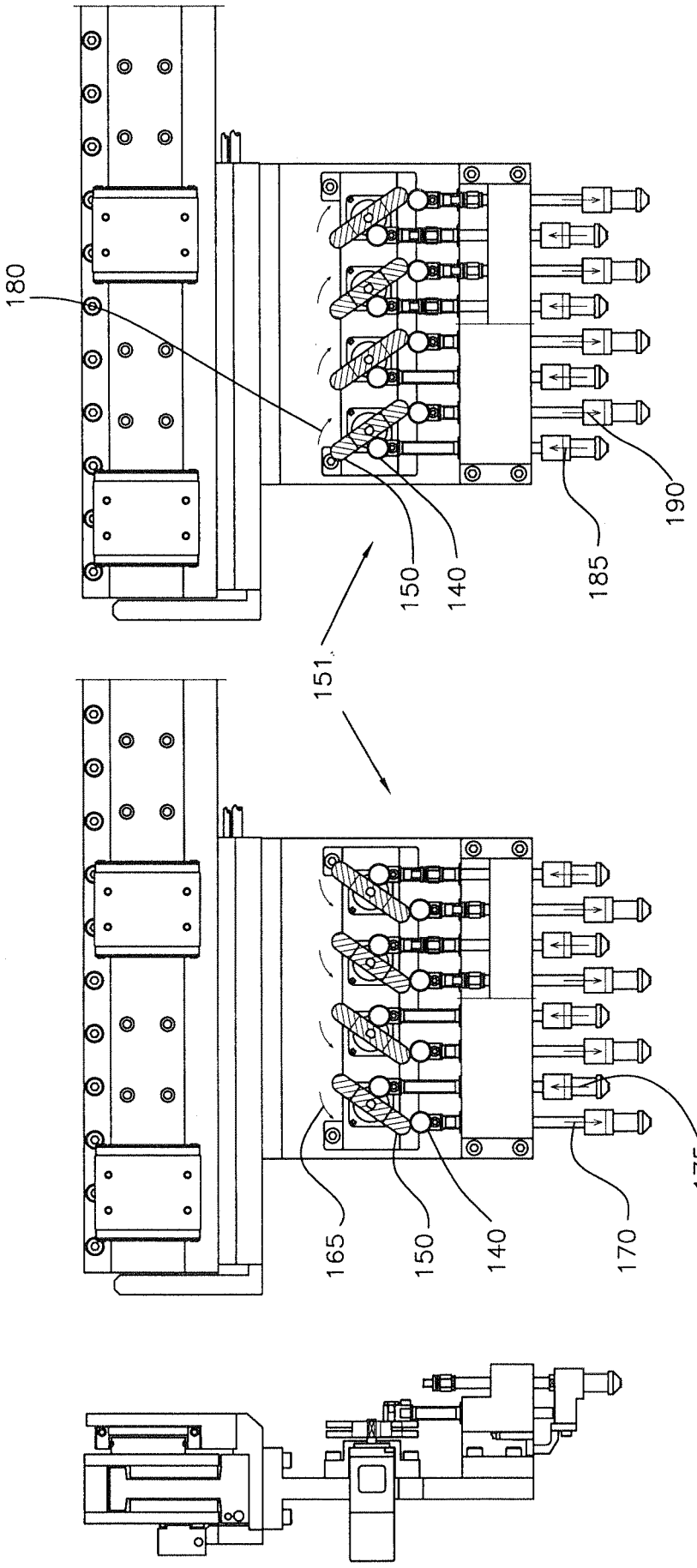

FIGURE 5C

FIGURE 5B

FIGURE 5A

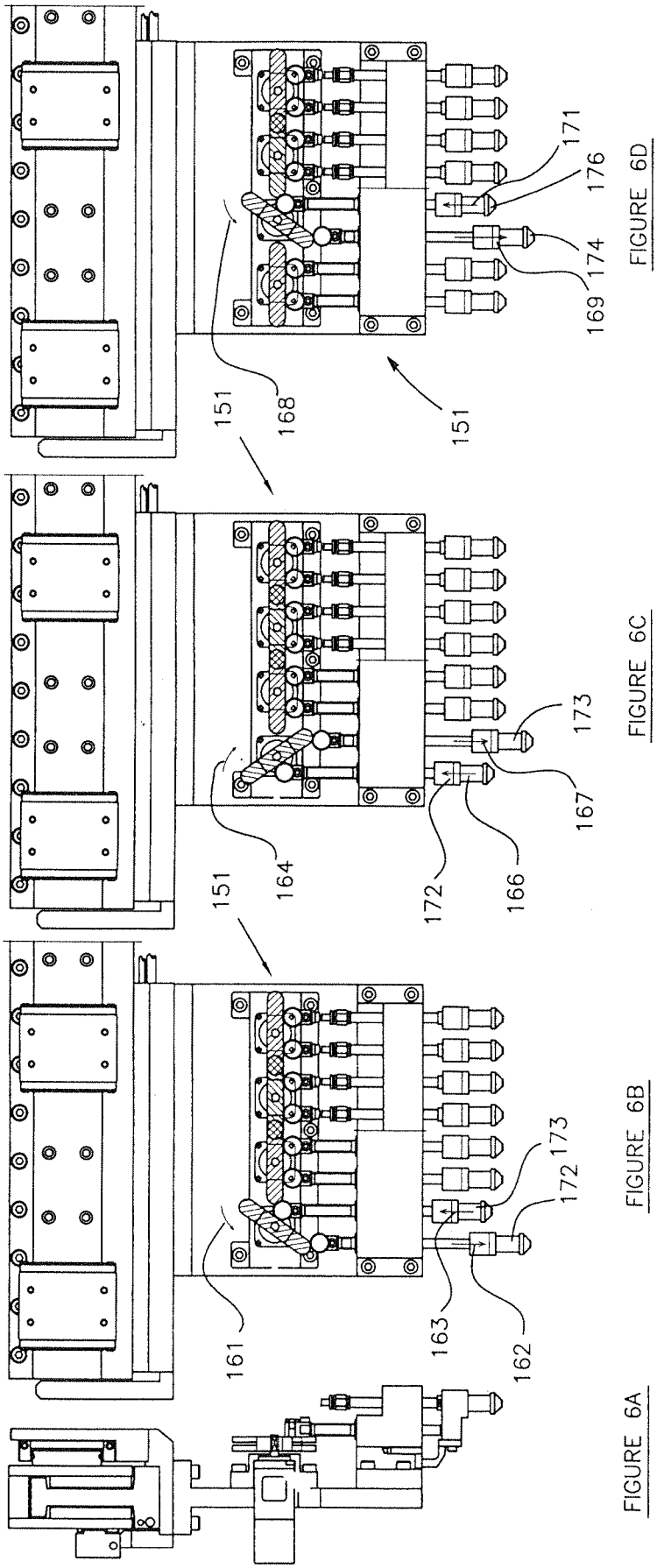

FIGURE 6D

FIGURE 6C

FIGURE 6B

FIGURE 6A

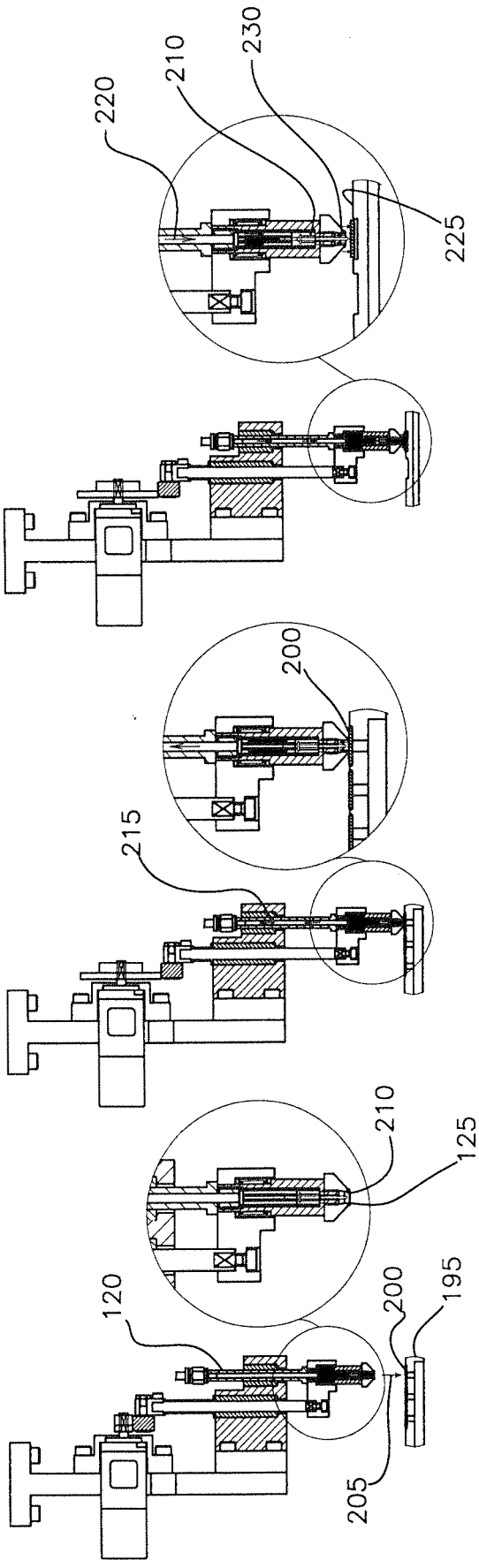

FIGURE 7C

FIGURE 7B

FIGURE 7A