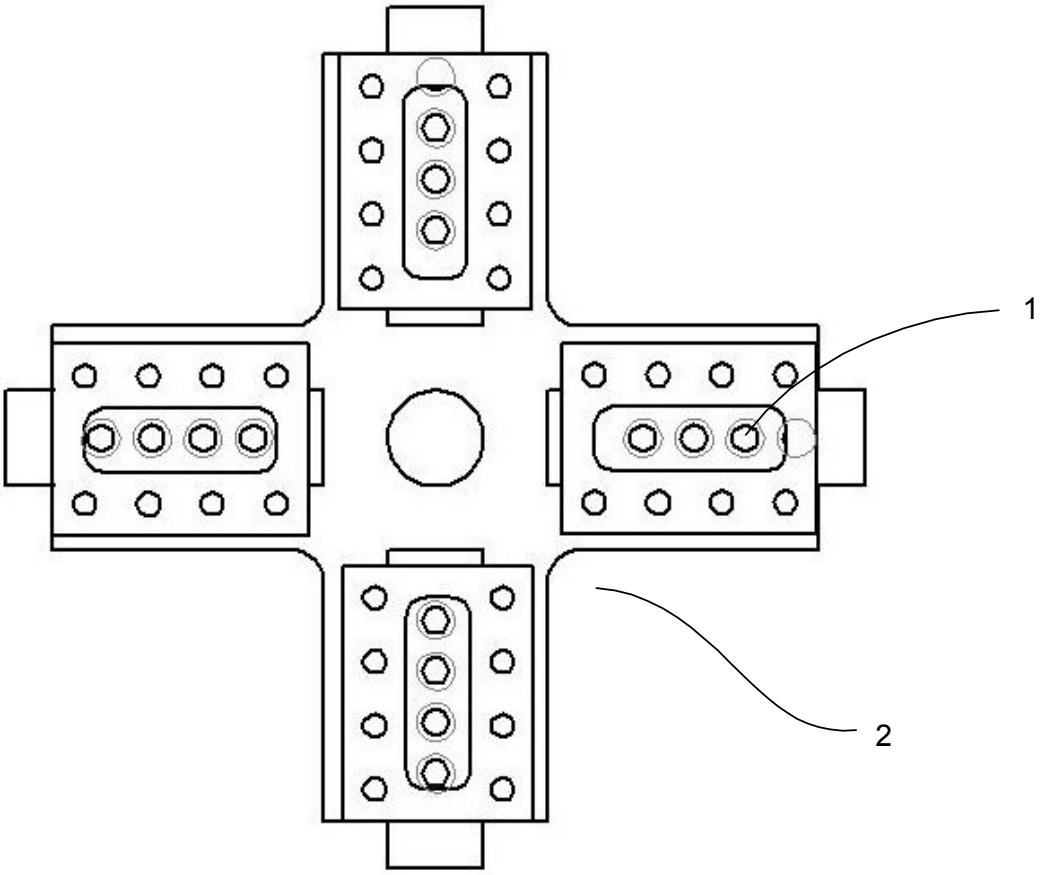

Figure 1

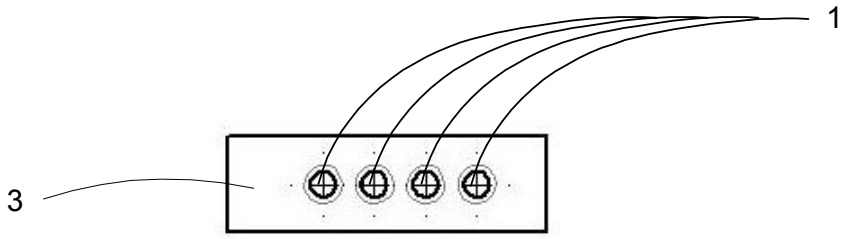

Figure 2

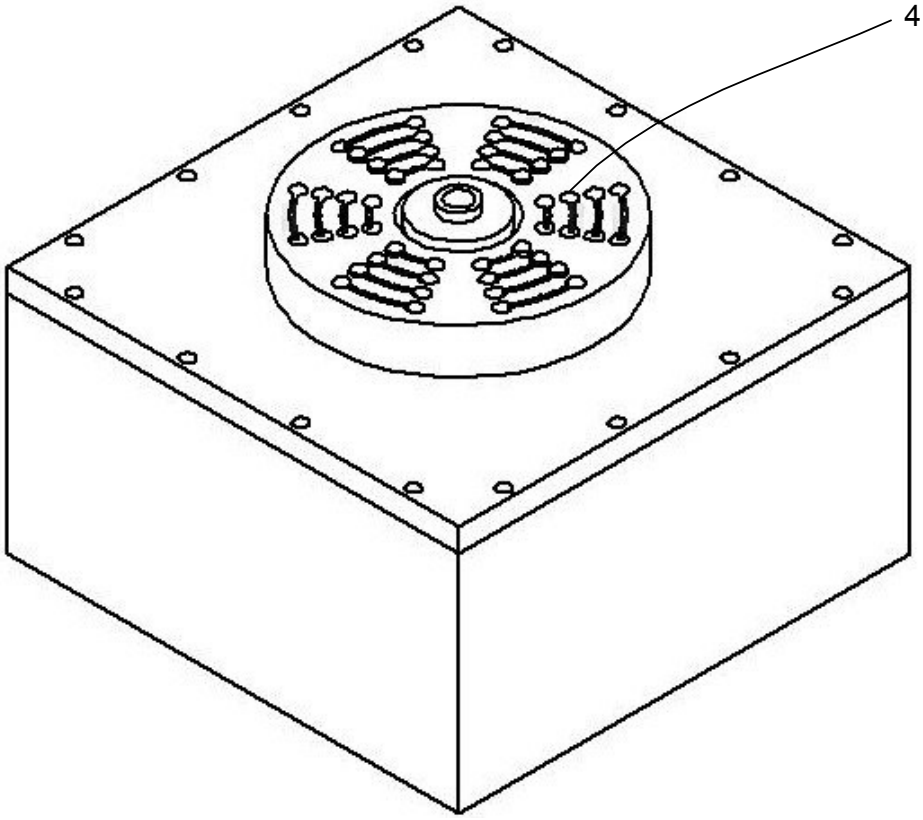

Figure 3

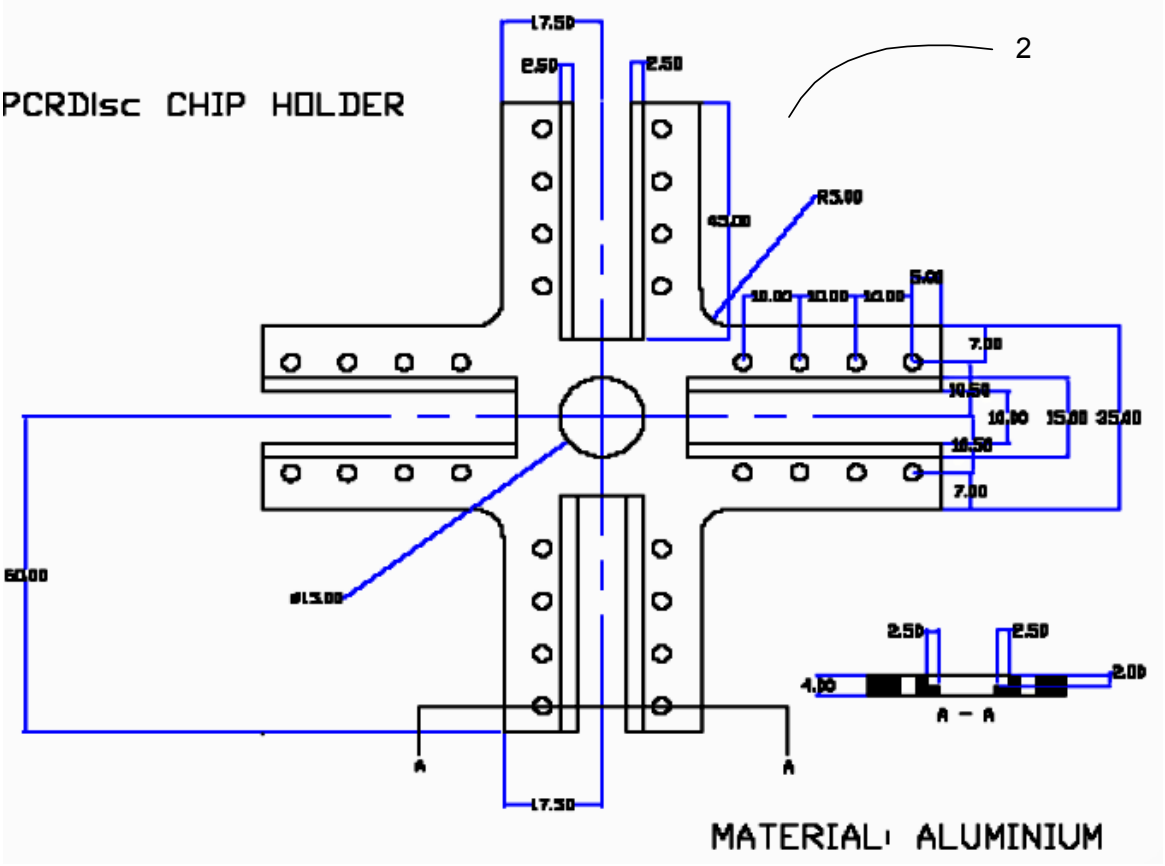
PCRDisc CHIP HOLDER
2
17.50
2.50
2.50
R3.00
45.00
5.00
10.00
10.00
10.00
7.00
10.50
10.00
15.00
35.00
10.50
7.00
60.00
Ø15.00
2.50
2.50
2.00
4.00
A - A
A
A
17.50
MATERIAL: ALUMINIUM

Figure 4

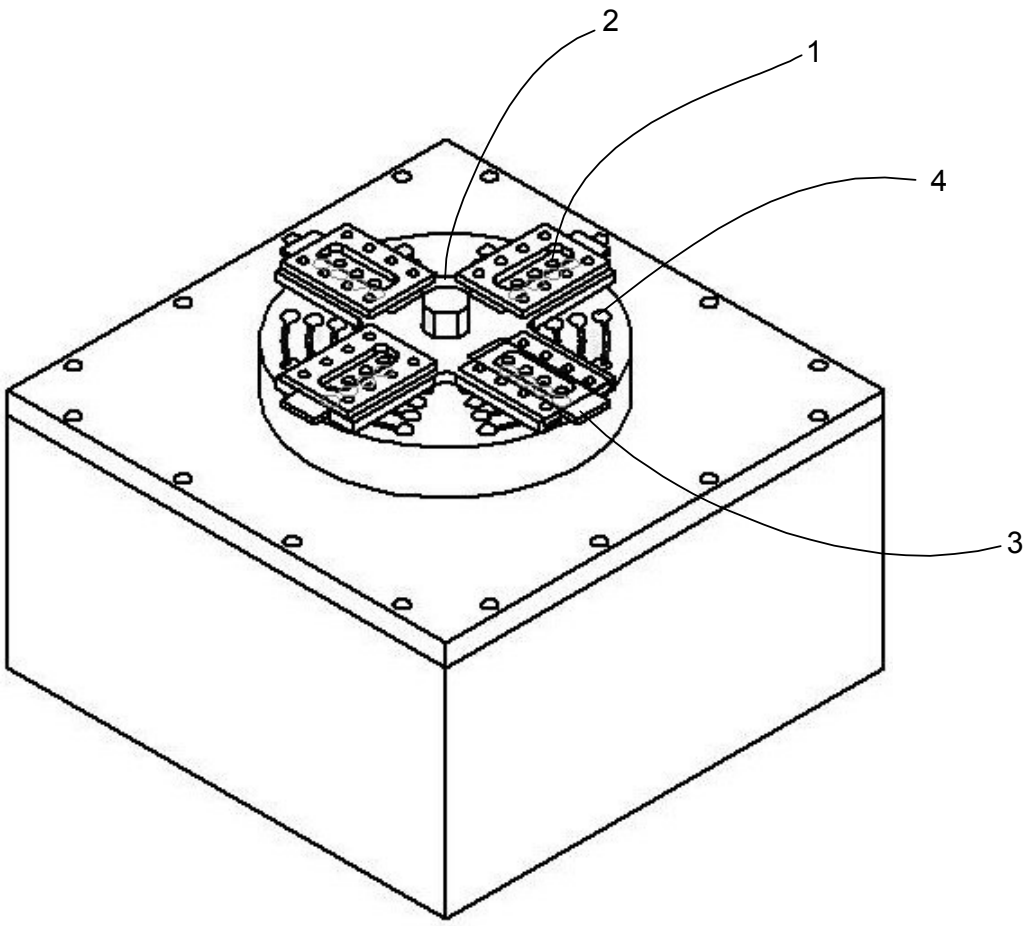

Figure 5