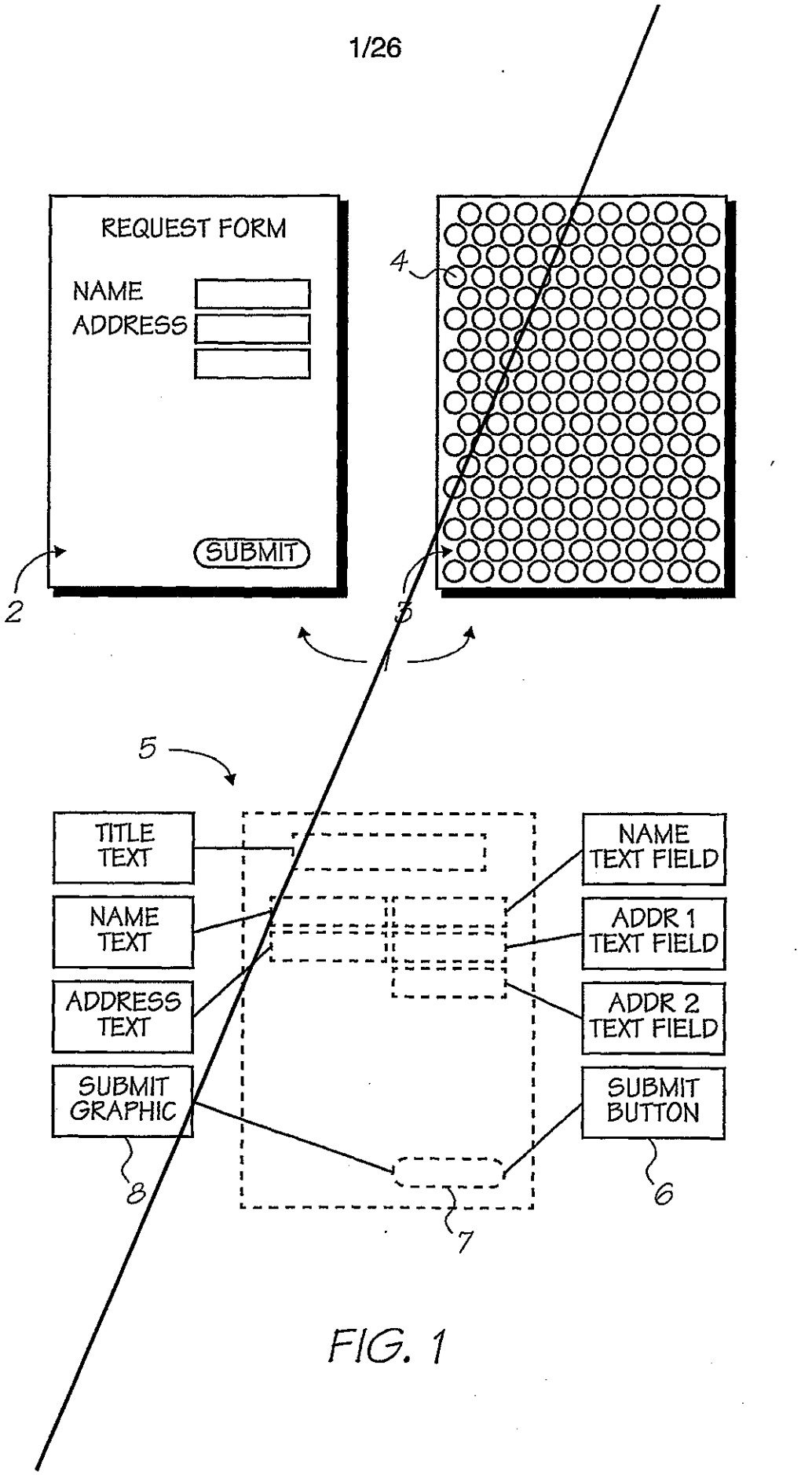
REQUEST FORM
NAME
ADDRESS
SUBMIT
2
4
3
1
5
TITLE TEXT
NAME TEXT
ADDRESS TEXT
SUBMIT GRAPHIC
NAME TEXT FIELD
ADDR 1 TEXT FIELD
ADDR 2 TEXT FIELD
SUBMIT BUTTON
8
6
7

FIG. 1

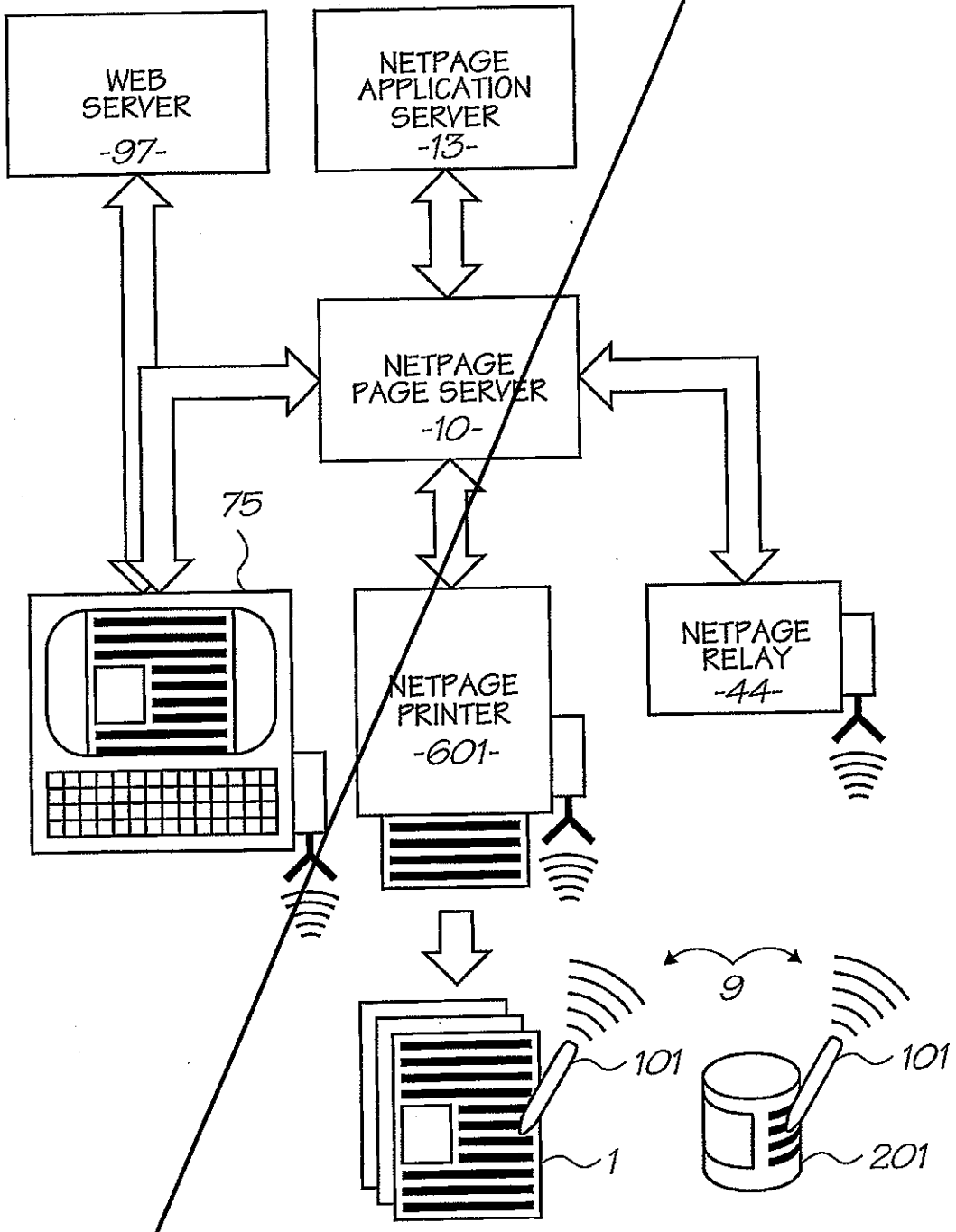
WEB SERVER -97-
NETPAGE APPLICATION SERVER -13-
NETPAGE PAGE SERVER -10-
75
NETPAGE PRINTER -601-
NETPAGE RELAY -44-
9
101
101
1
201

FIG. 2

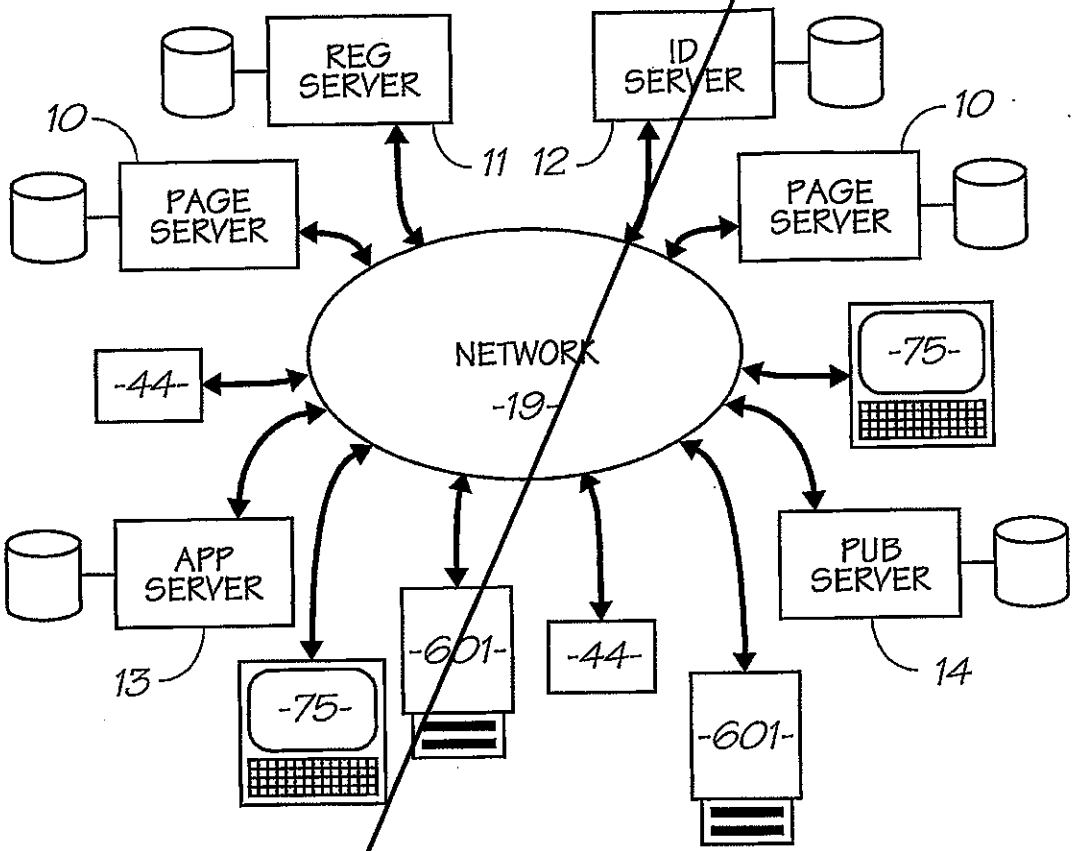
REG SERVER
ID SERVER
10
PAGE SERVER
11
12
10
PAGE SERVER
NETWORK
-19-
-44-
-75-
APP SERVER
13
-601-
-44-
-75-
-601-
PUB SERVER
14

FIG. 3

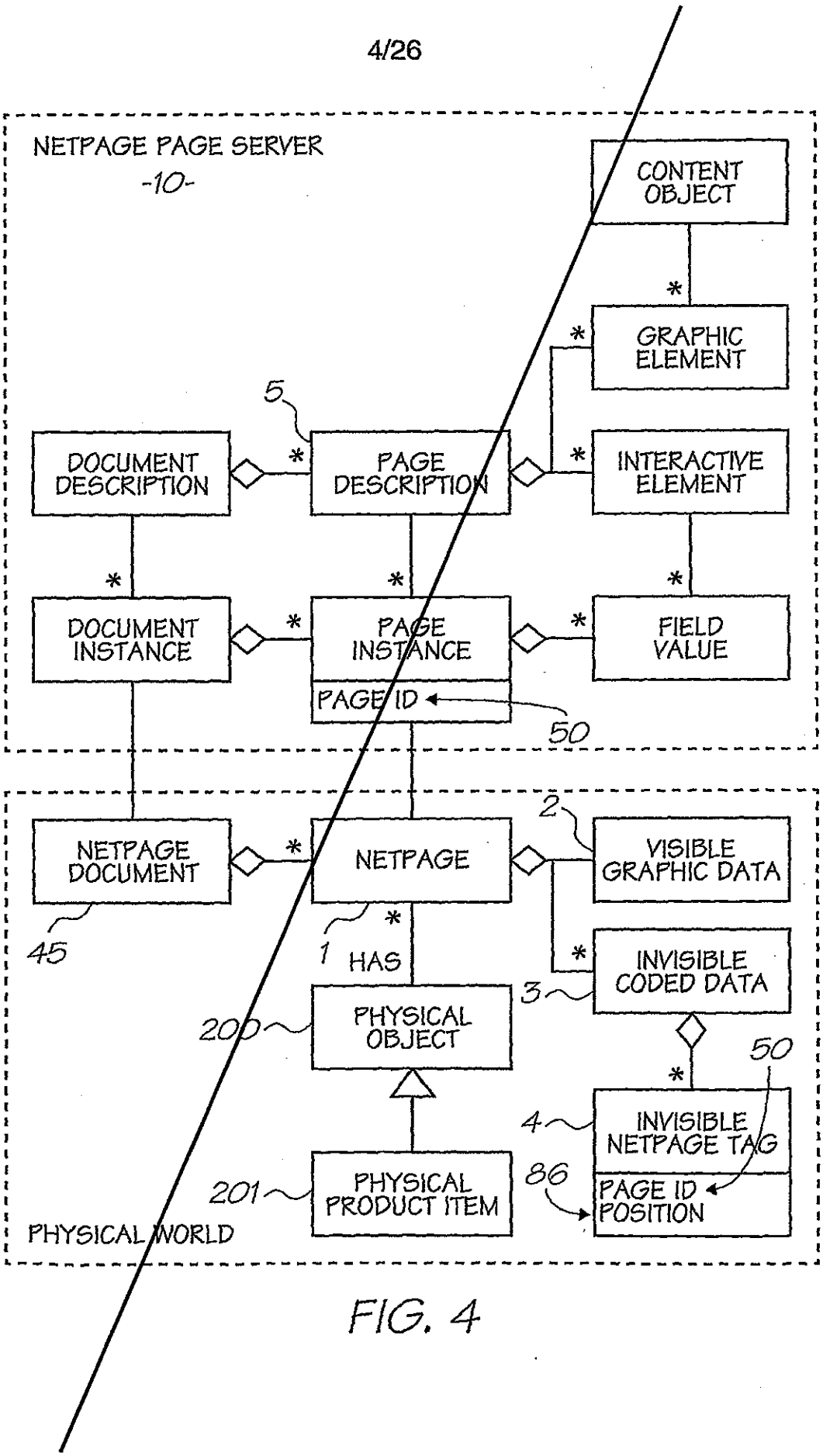
NETPAGE PAGE SERVER
-10-
CONTENT OBJECT
GRAPHIC ELEMENT
5
DOCUMENT DESCRIPTION
PAGE DESCRIPTION
INTERACTIVE ELEMENT
DOCUMENT INSTANCE
PAGE INSTANCE
FIELD VALUE
PAGE ID
50
NETPAGE DOCUMENT
NETPAGE
2
VISIBLE GRAPHIC DATA
45
1
HAS
INVISIBLE CODED DATA
3
200
PHYSICAL OBJECT
50
4
INVISIBLE NETPAGE TAG
86
PAGE ID
POSITION
201
PHYSICAL PRODUCT ITEM
PHYSICAL WORLD

FIG. 4

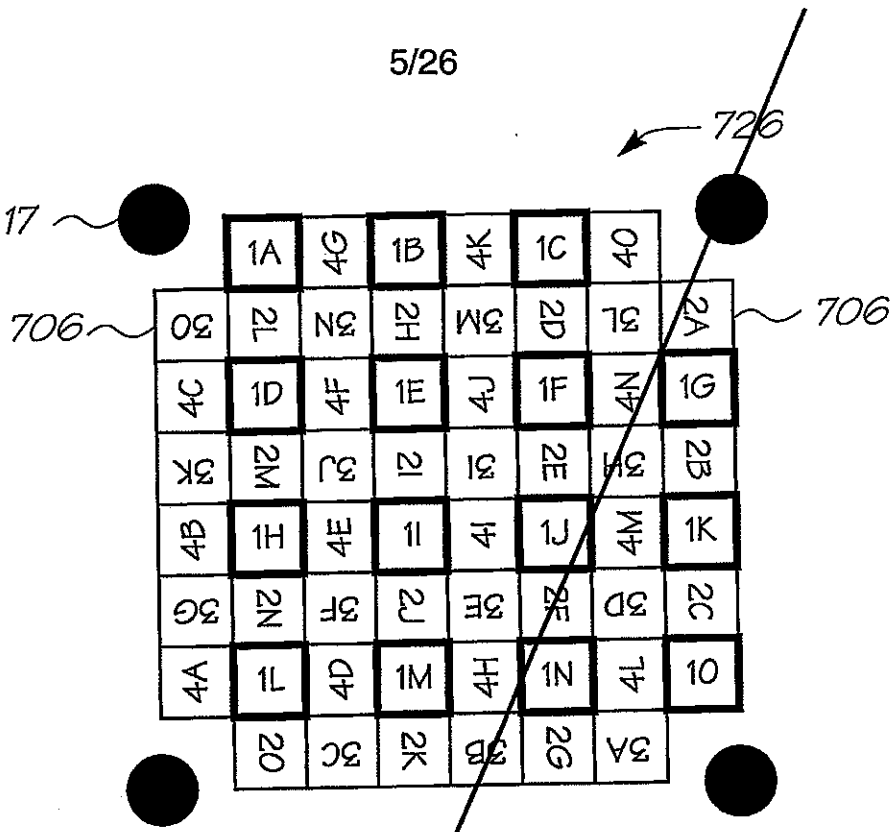
726
17
706
706
1A
4G
1B
4K
1C
4O
3O
2L
3N
2H
3M
2D
3L
2A
4C
1D
4F
1E
4J
1F
4N
1G
3K
2M
3J
2I
3I
2E
3H
2B
4B
1H
4E
1I
4I
1J
4M
1K
3G
2N
3F
2J
3E
2F
3D
2C
4A
1L
4D
1M
4H
1N
4L
1O
2O
3C
2K
3B
2G
3A

FIG. 5A

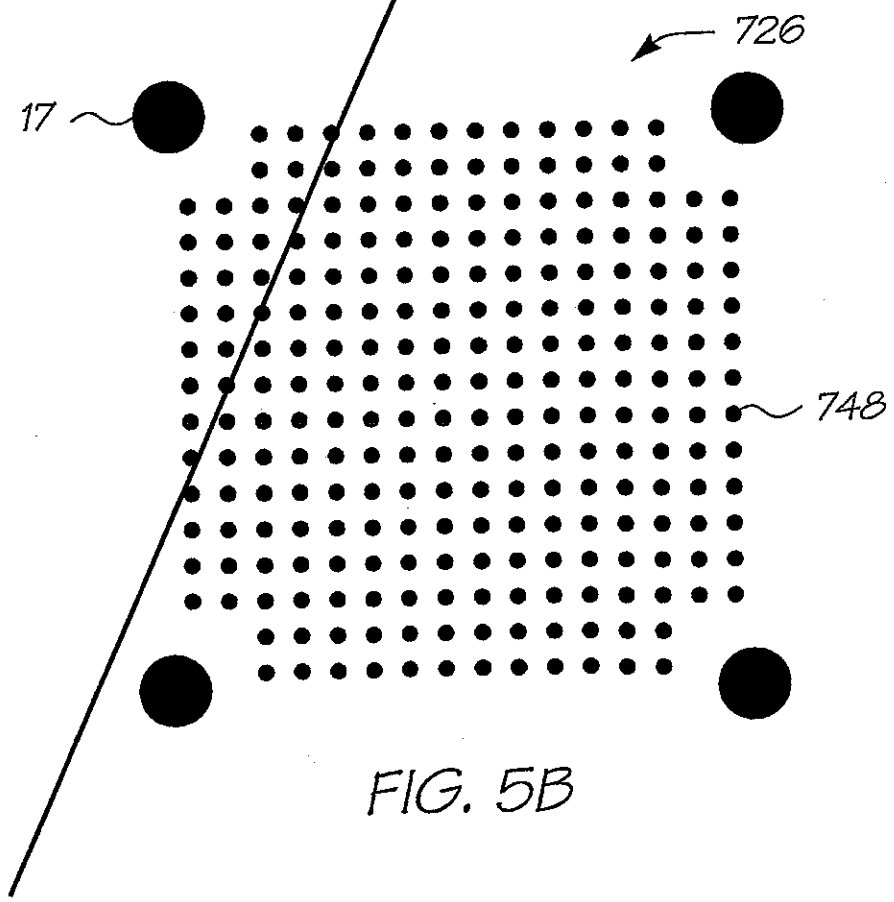
726
17
748

FIG. 5B

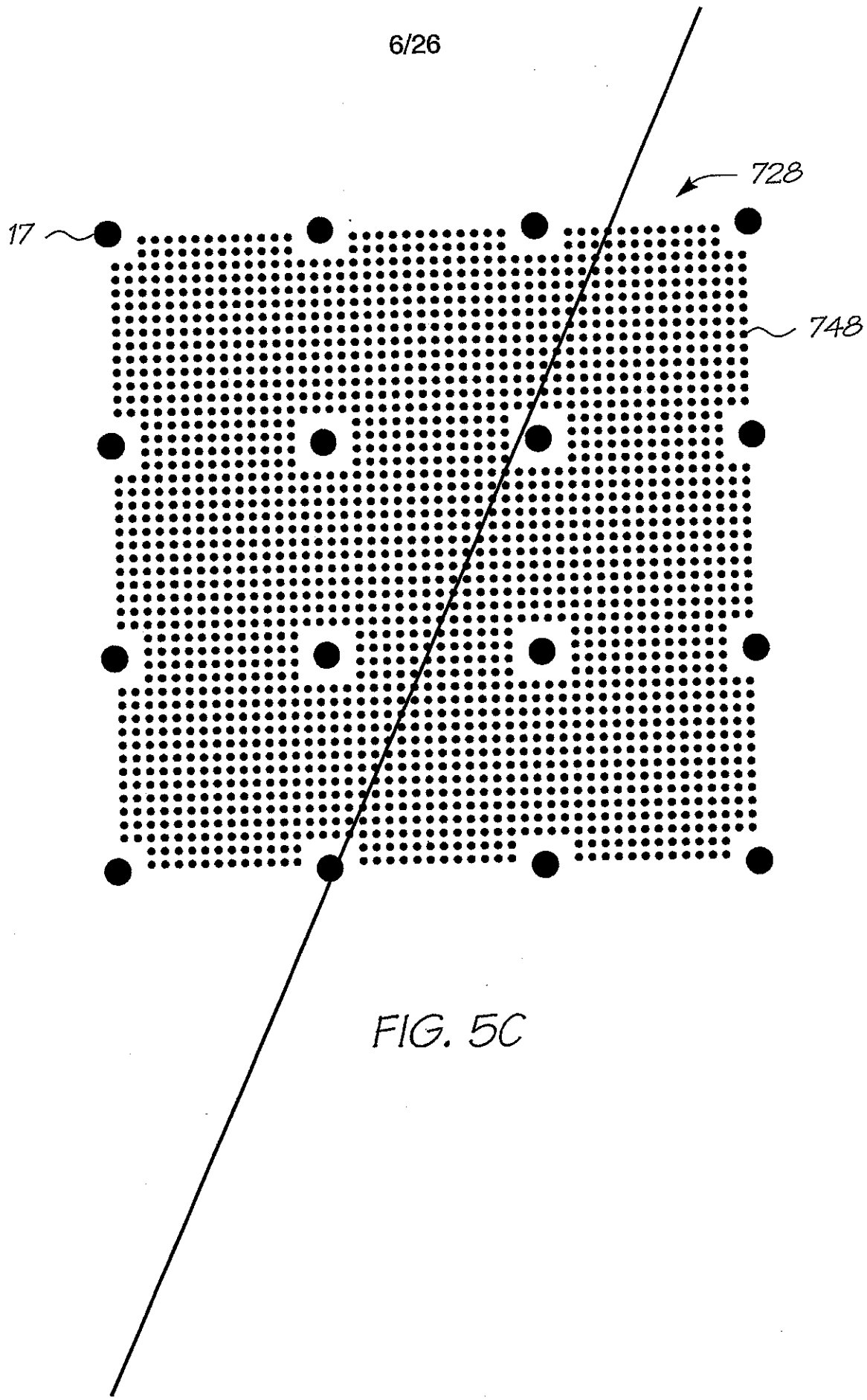

FIG. 5C

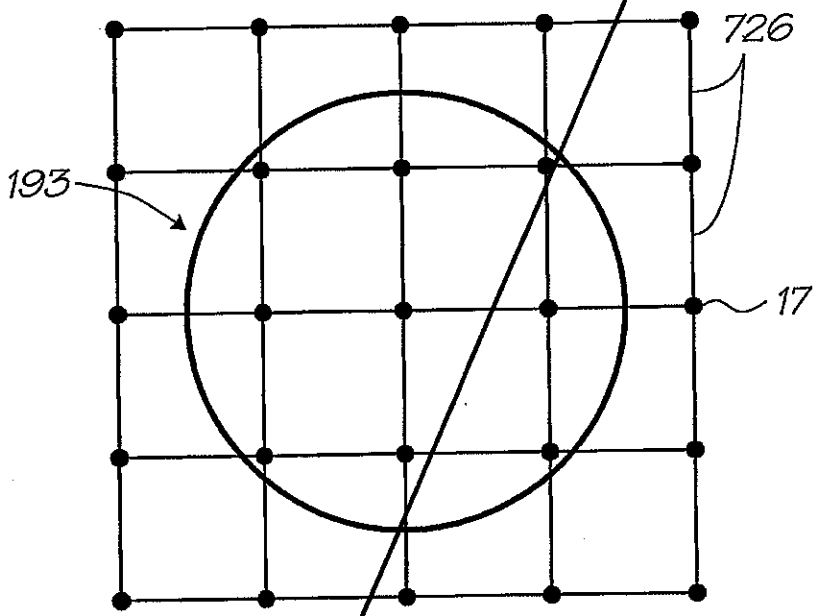

FIG. 5D

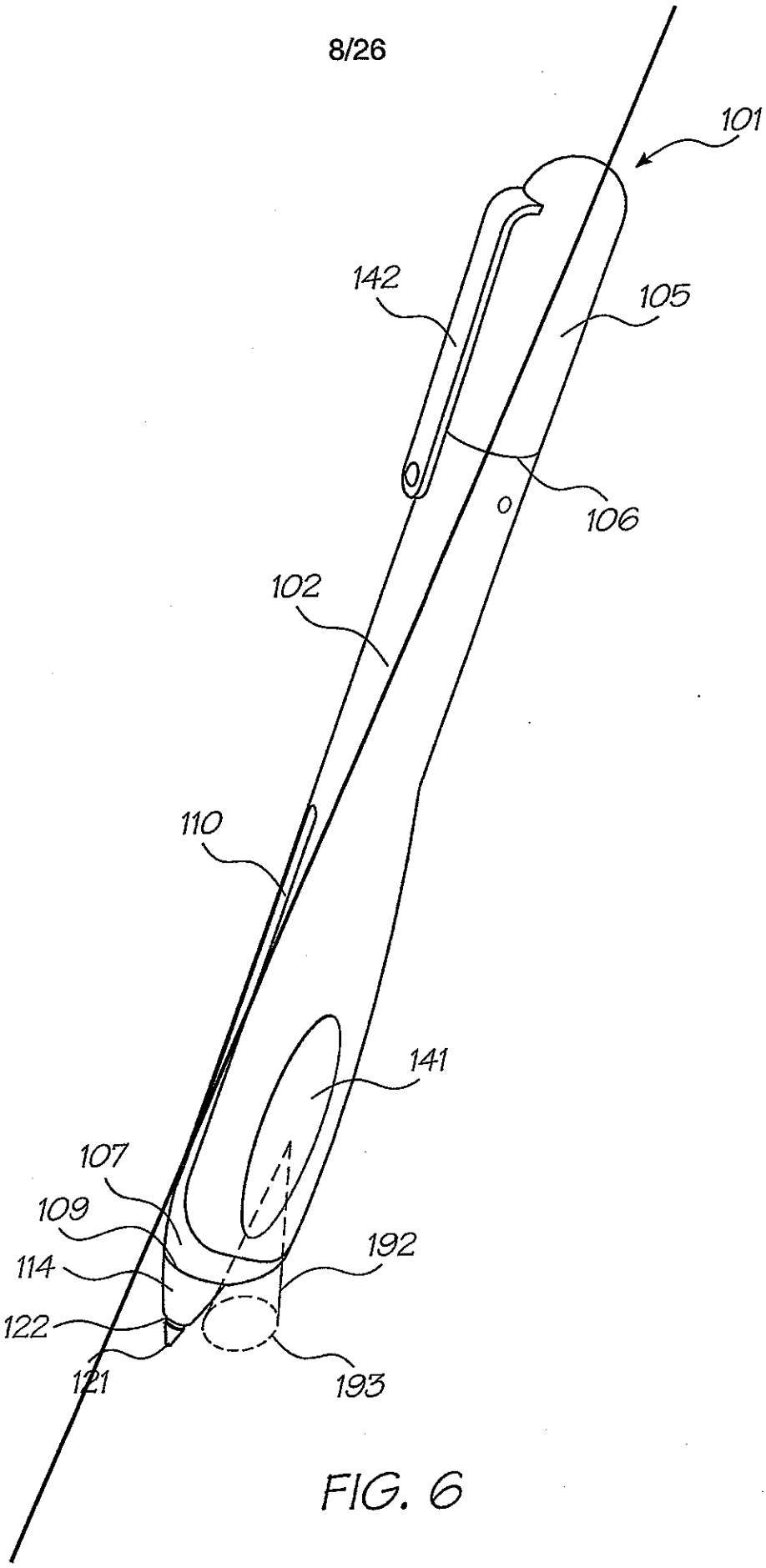

FIG. 6

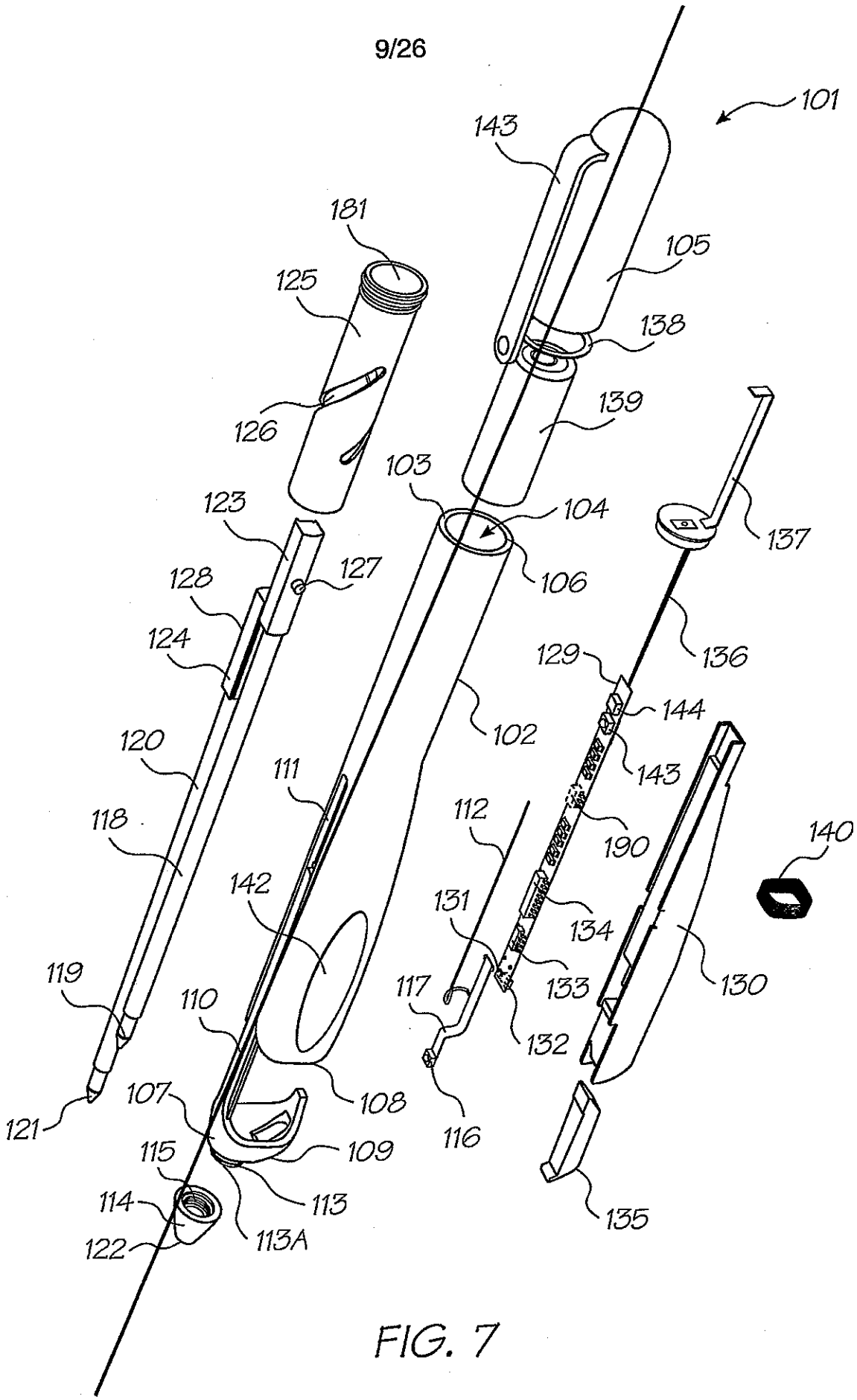
101
143
181
105
125
138
126
139
103
104
137
123
127
106
128
136
124
129
144
102
120
143
111
112
190
118
140
142
131
134
133
130
119
117
110
132
108
107
116
121
109
115
113
114
135
113A
122

FIG. 7

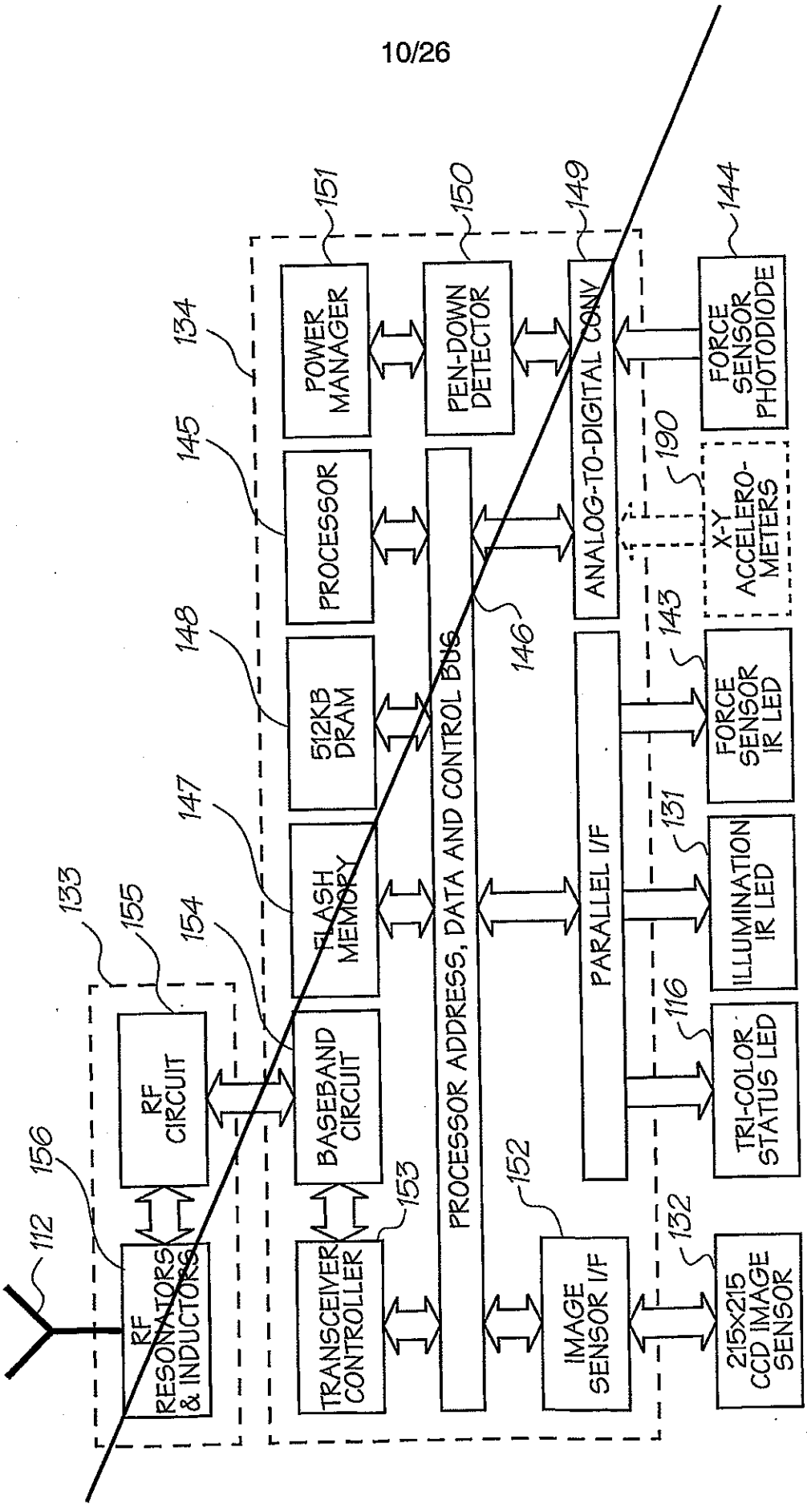
112
156
RF RESONATORS & INDUCTORS
133
155
RF CIRCUIT
154
BASEBAND CIRCUIT
153
TRANSCEIVER CONTROLLER
147
FLASH MEMORY
148
512KB DRAM
145
PROCESSOR
134
151
POWER MANAGER
150
PEN-DOWN DETECTOR
149
ANALOG-TO-DIGITAL CONV
144
FORCE SENSOR PHOTODIODE
190
X-Y ACCELERO-METERS
146
PROCESSOR ADDRESS, DATA AND CONTROL BUS
143
FORCE SENSOR IR LED
131
ILLUMINATION IR LED
116
TRI-COLOR STATUS LED
PARALLEL I/F
152
IMAGE SENSOR I/F
132
215X215 CCD IMAGE SENSOR

FIG. 8

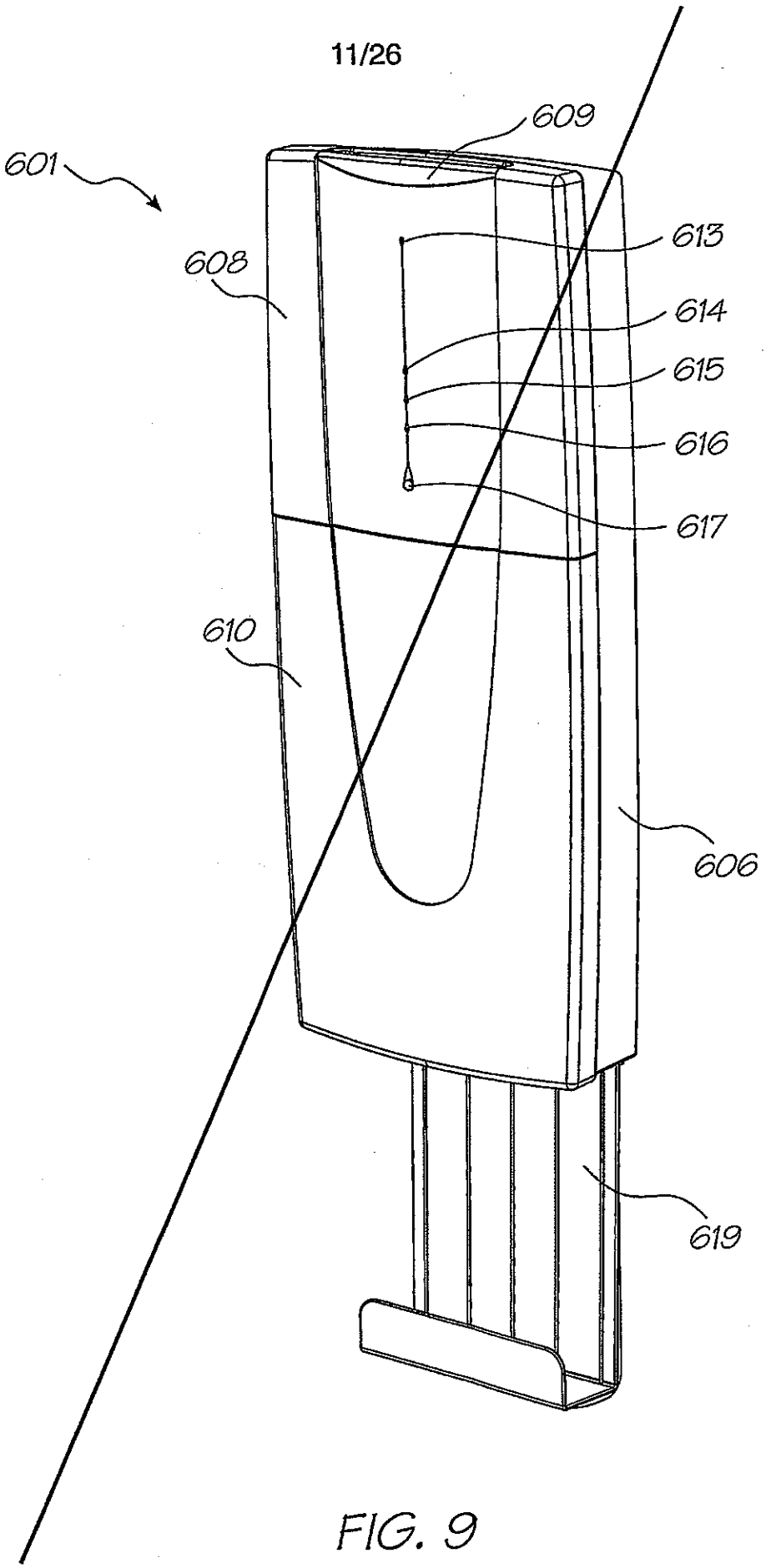

FIG. 9

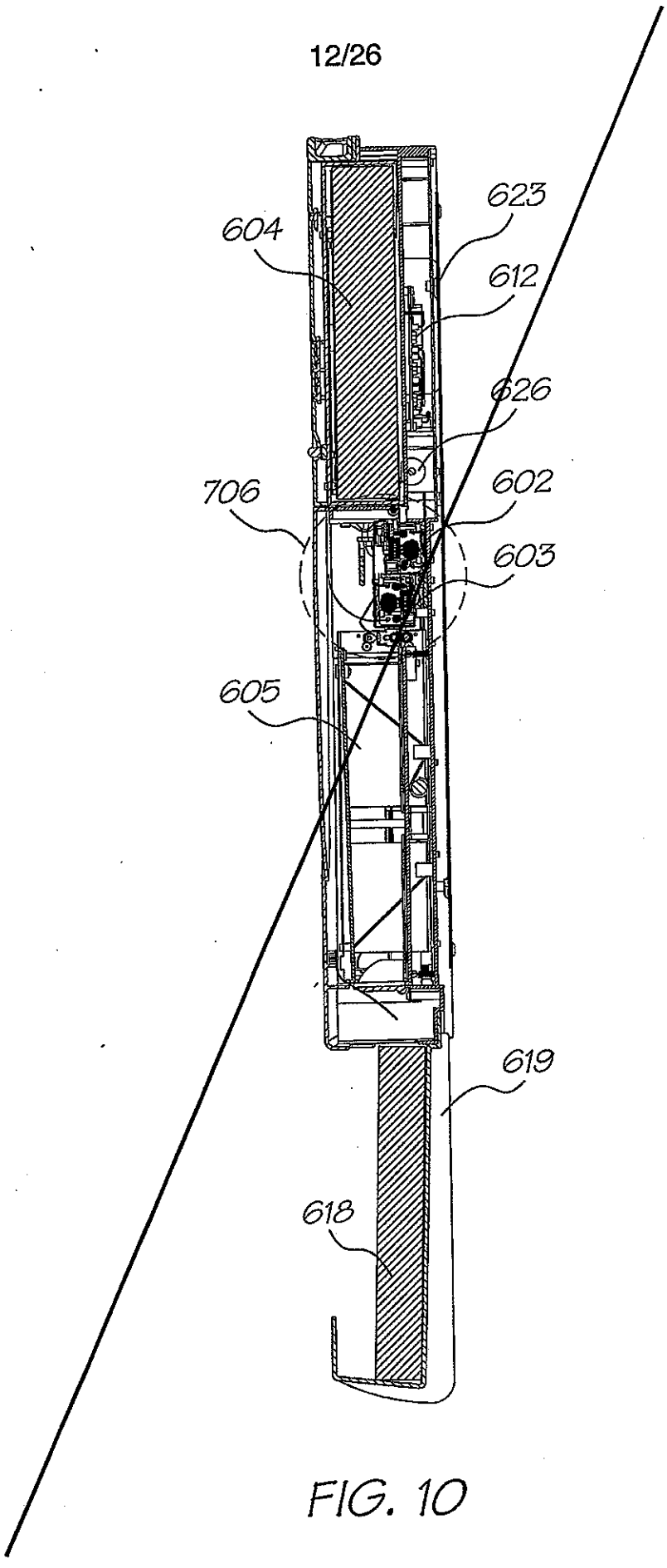

FIG. 10

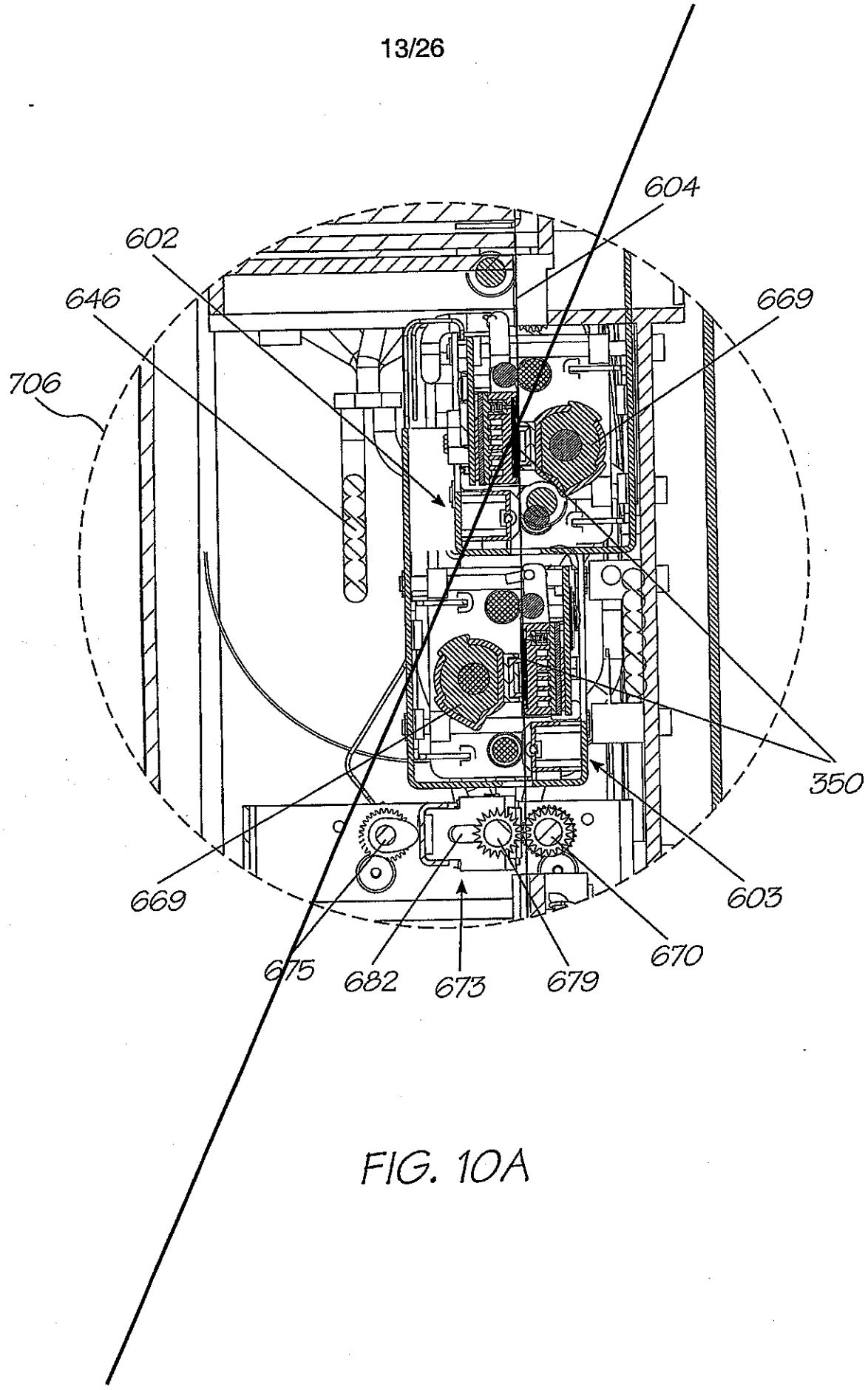

FIG. 10A

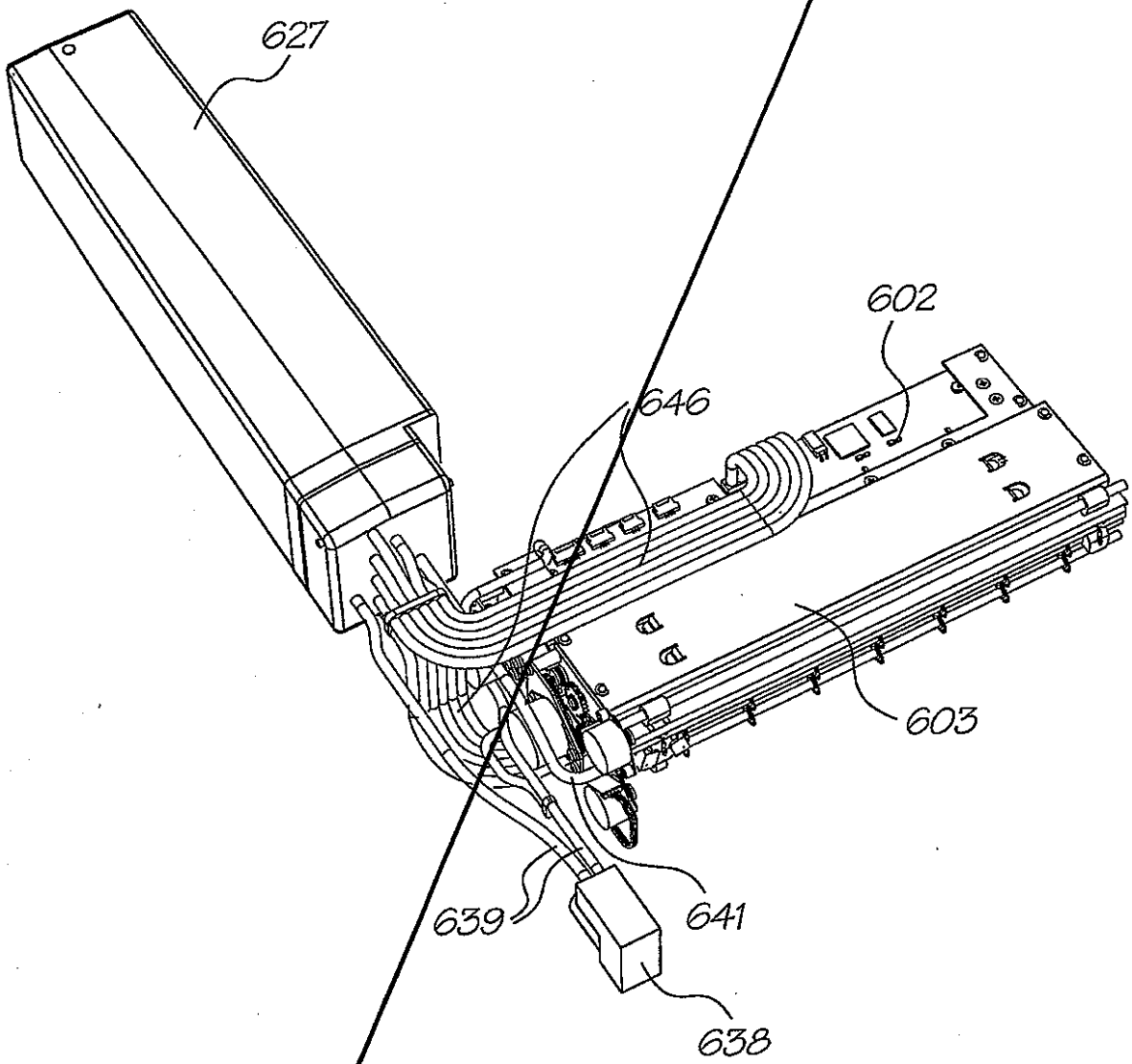

FIG. 11

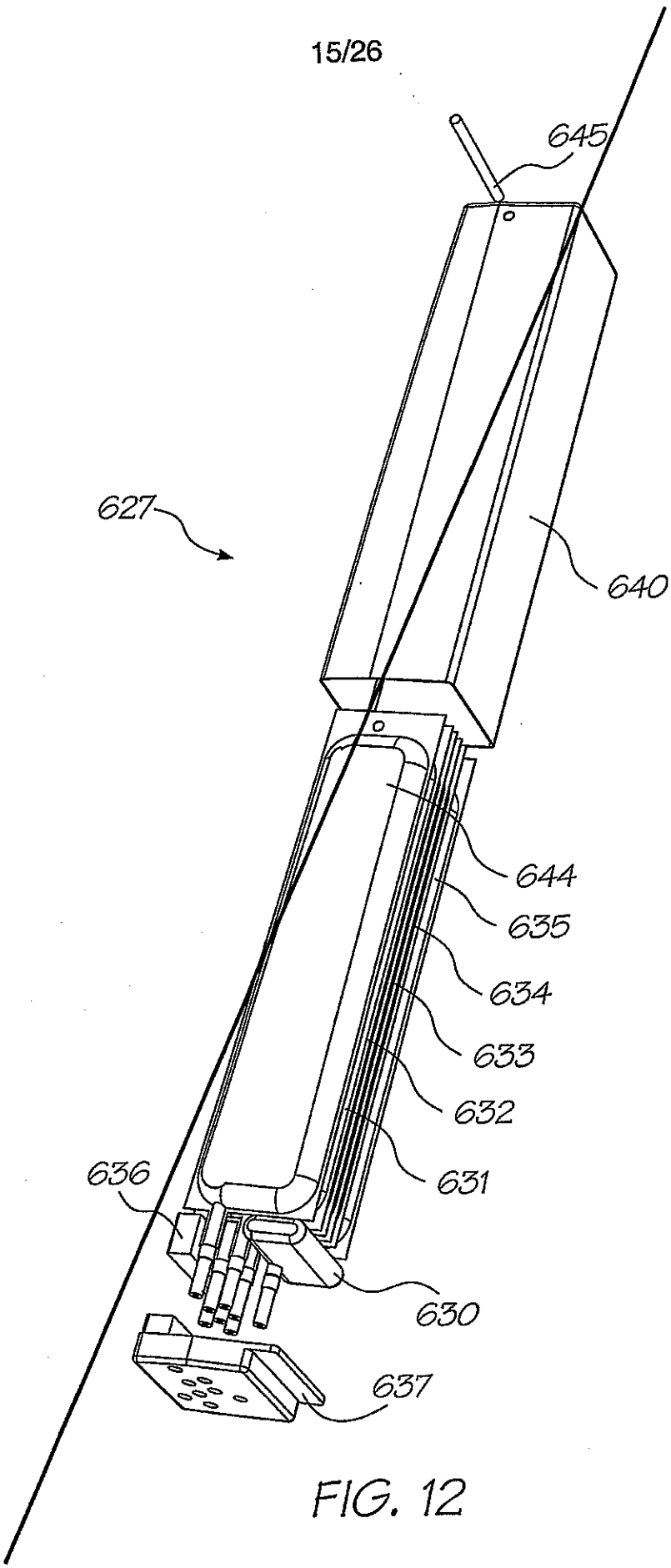

FIG. 12

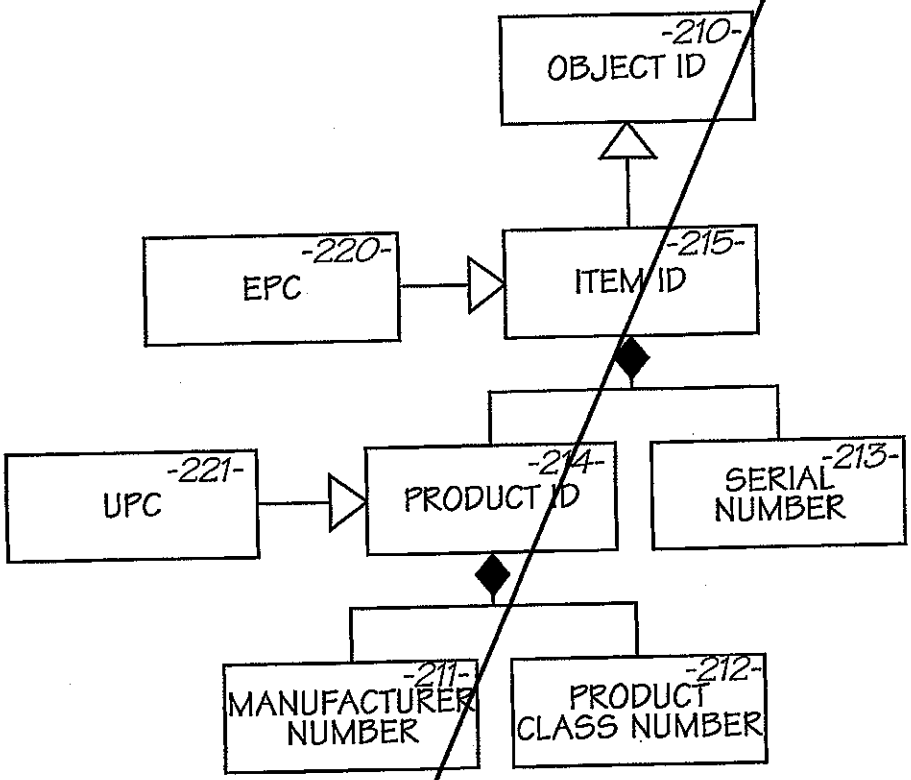
OBJECT ID
-210-
EPC
-220-
ITEM ID
-215-
UPC
-221-
PRODUCT ID
-214-
SERIAL NUMBER
-213-
MANUFACTURER NUMBER
-211-
PRODUCT CLASS NUMBER
-212-

FIG. 13

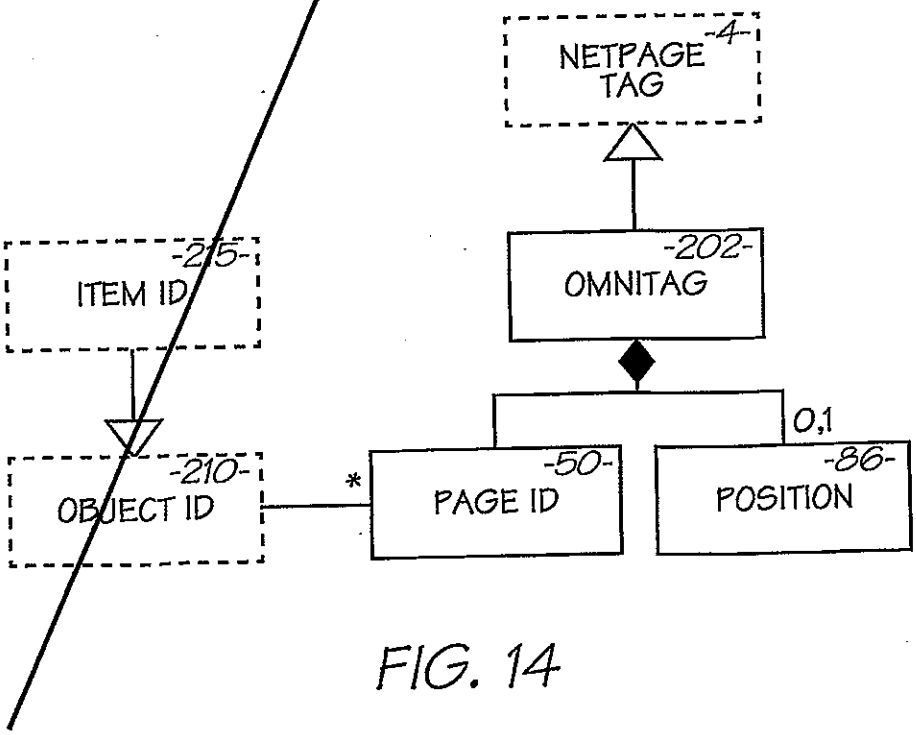
NETPAGE TAG
-4-
ITEM ID
-215-
OMNITAG
-202-
0,1
OBJECT ID
-210-
*
PAGE ID
-50-
POSITION
-86-

FIG. 14

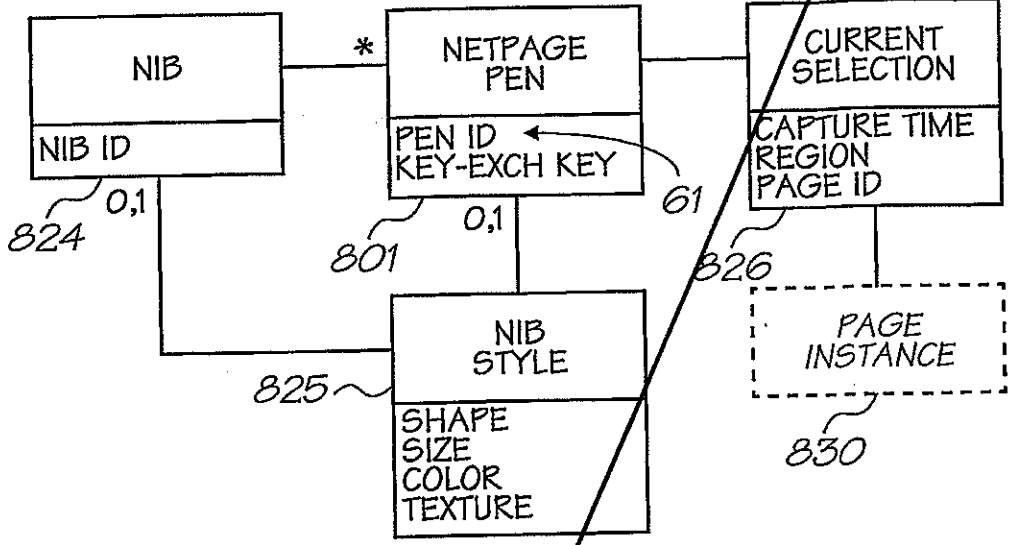
NIB
NIB ID
*
NETPAGE PEN
PEN ID
KEY-EXCH KEY
CURRENT SELECTION
CAPTURE TIME
REGION
PAGE ID
0,1
824
801
0,1
61
826
NIB STYLE
825
SHAPE
SIZE
COLOR
TEXTURE
PAGE INSTANCE
830

FIG. 15

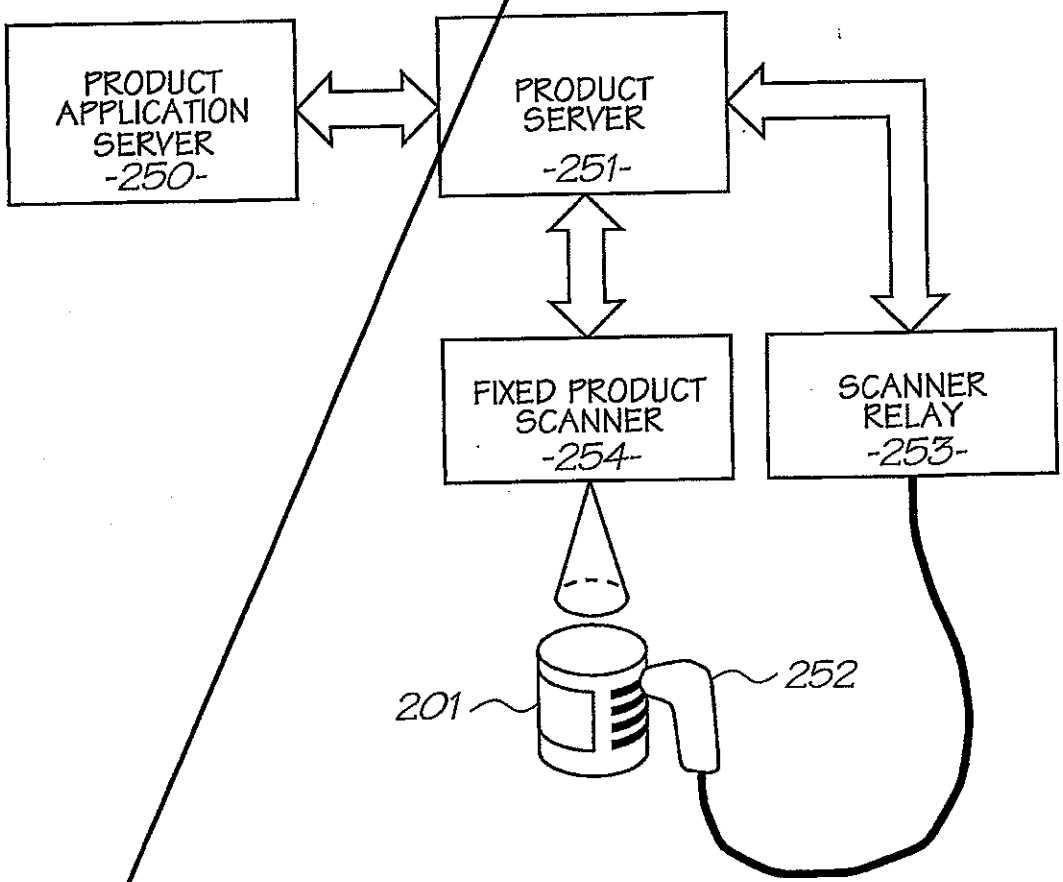
PRODUCT APPLICATION SERVER -250-
PRODUCT SERVER -251-
FIXED PRODUCT SCANNER -254-
SCANNER RELAY -253-
201
252

FIG. 16

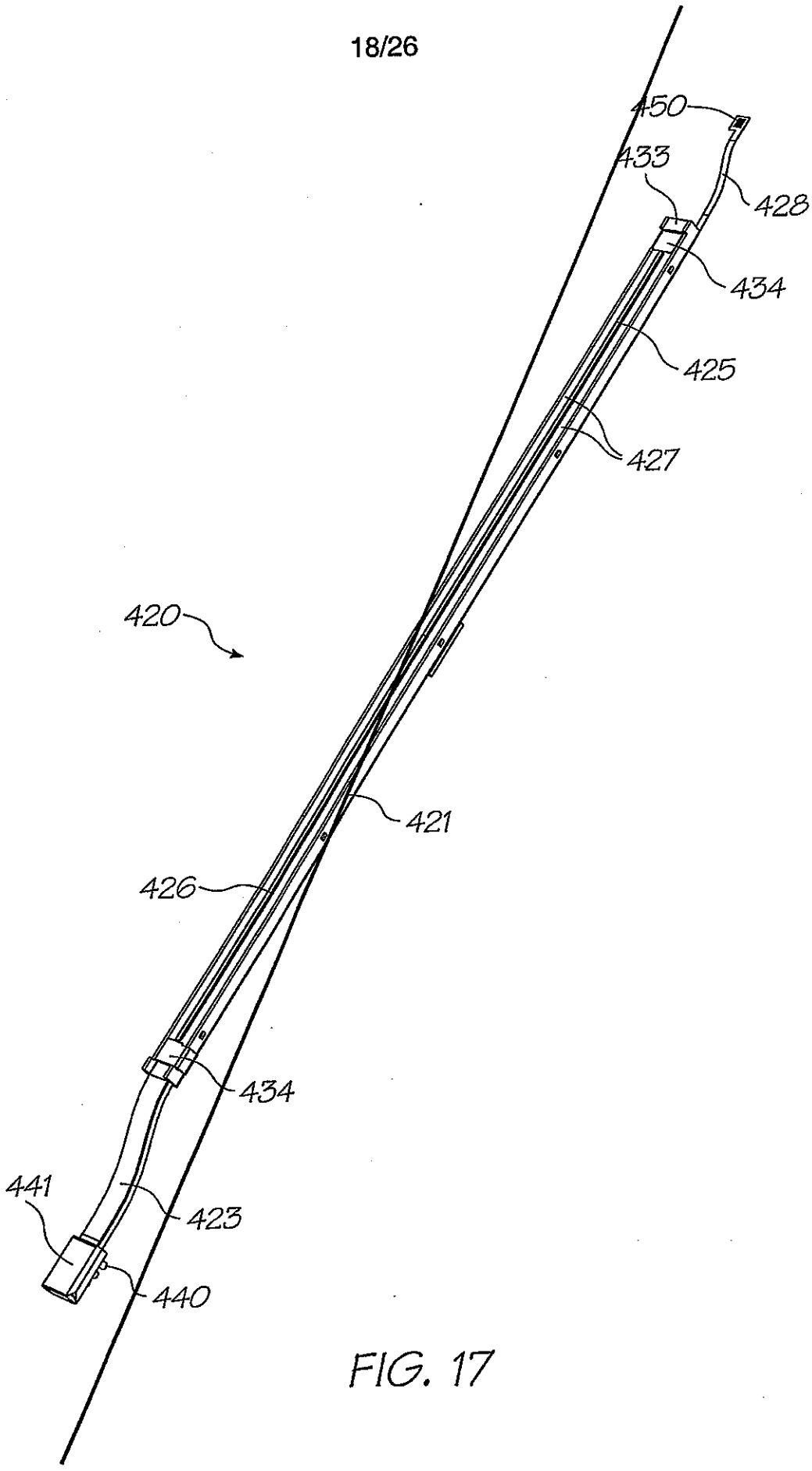

FIG. 17

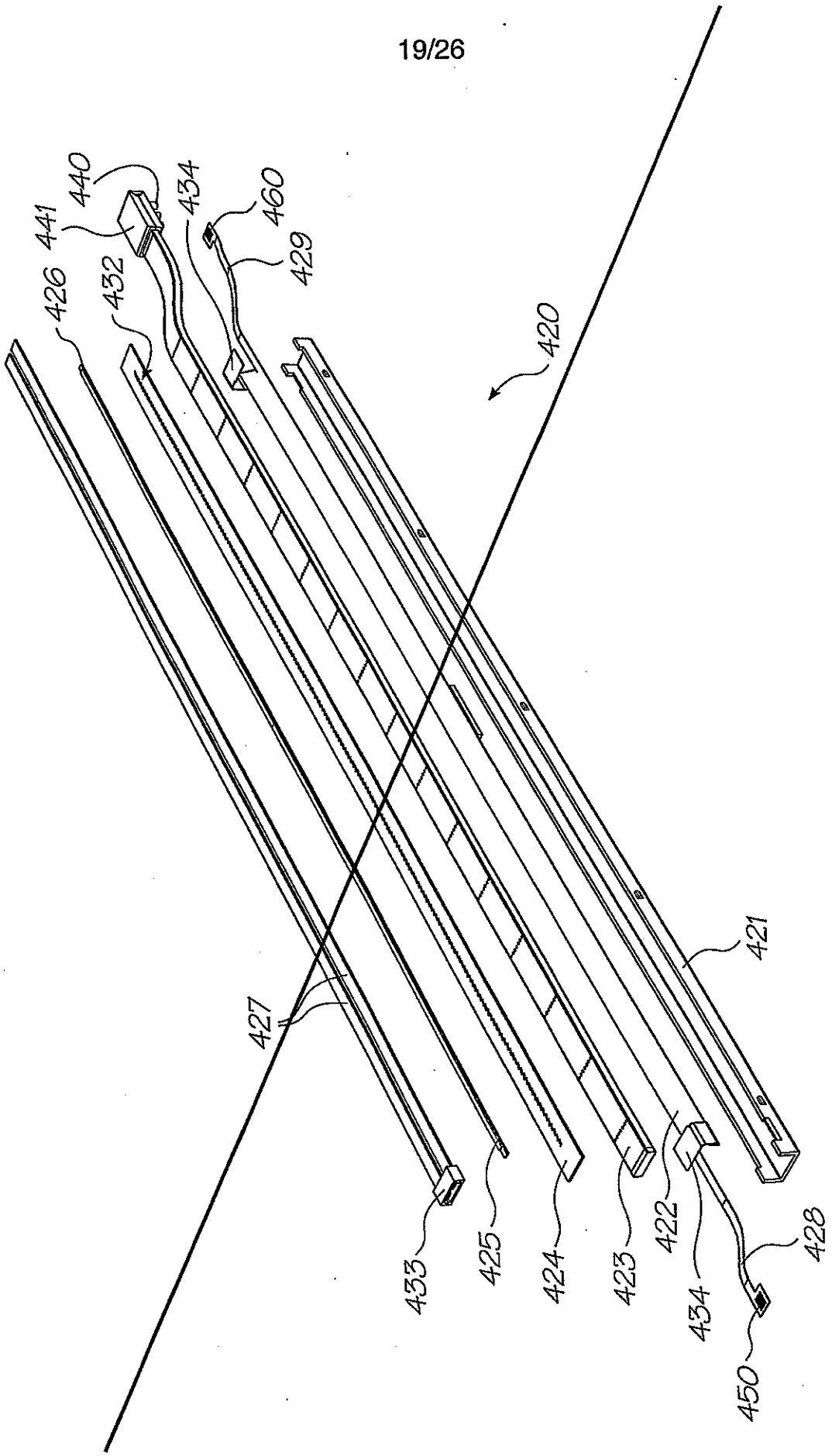
440
441
434
460
429
426
432
420
427
421
433
425
424
423
422
434
428
450

FIG. 18

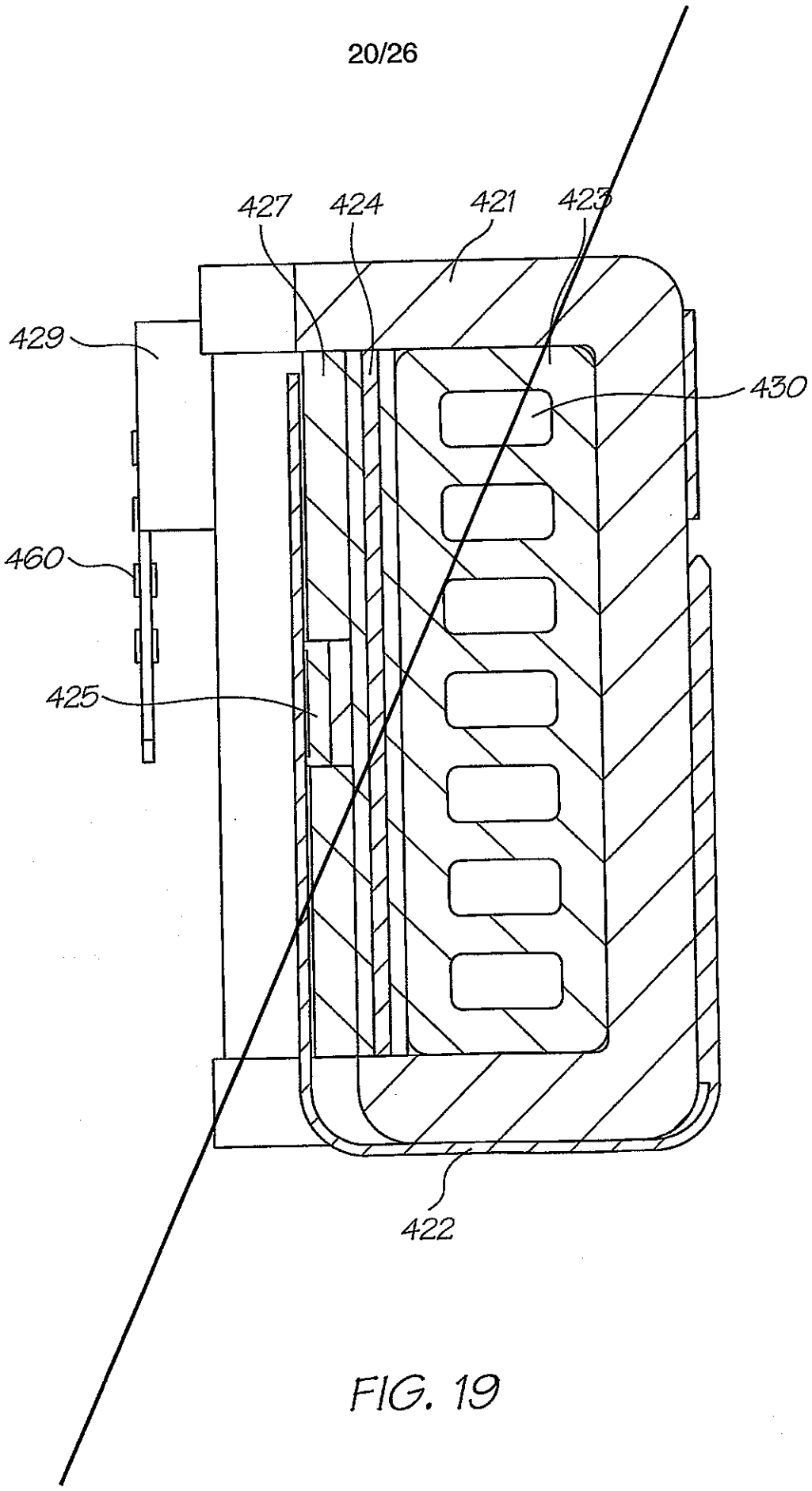

FIG. 19

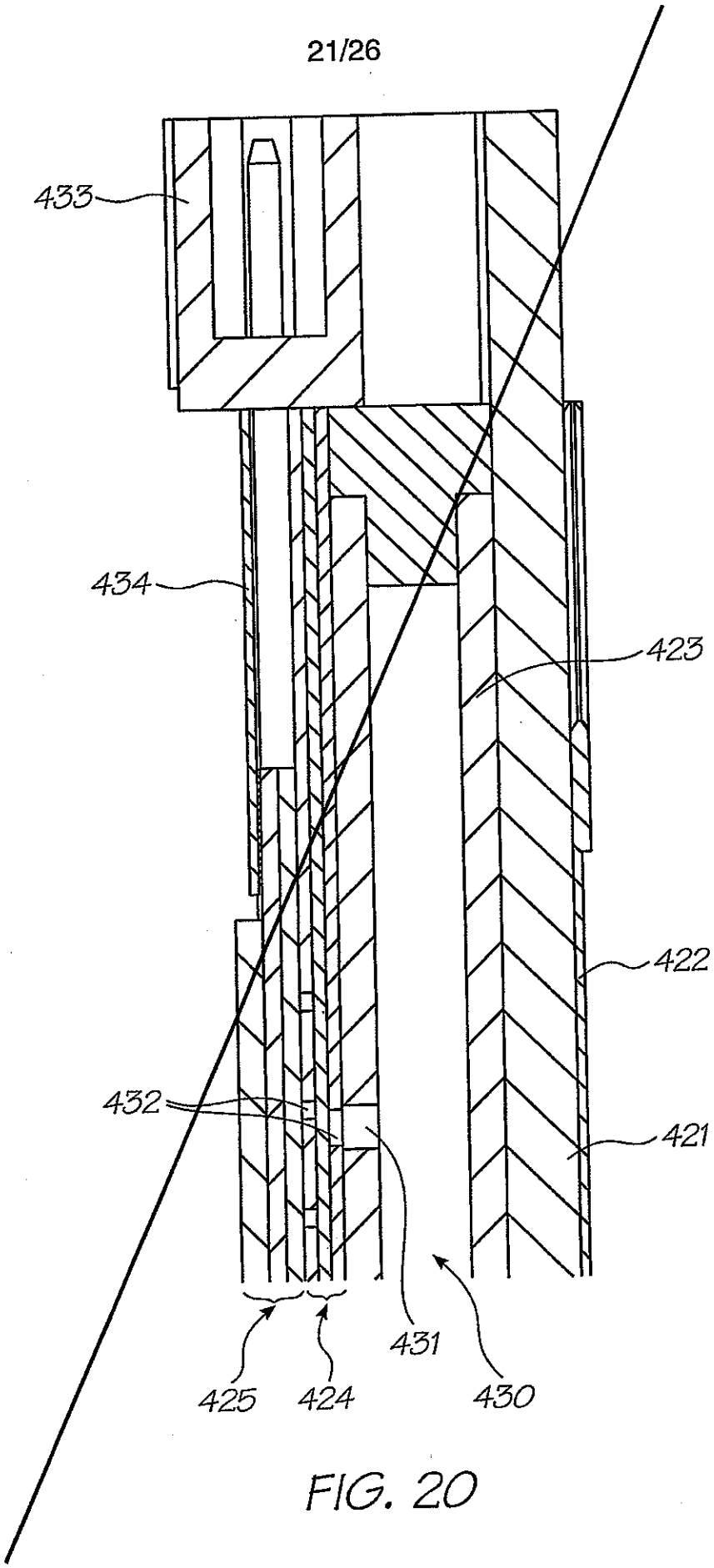

FIG. 20

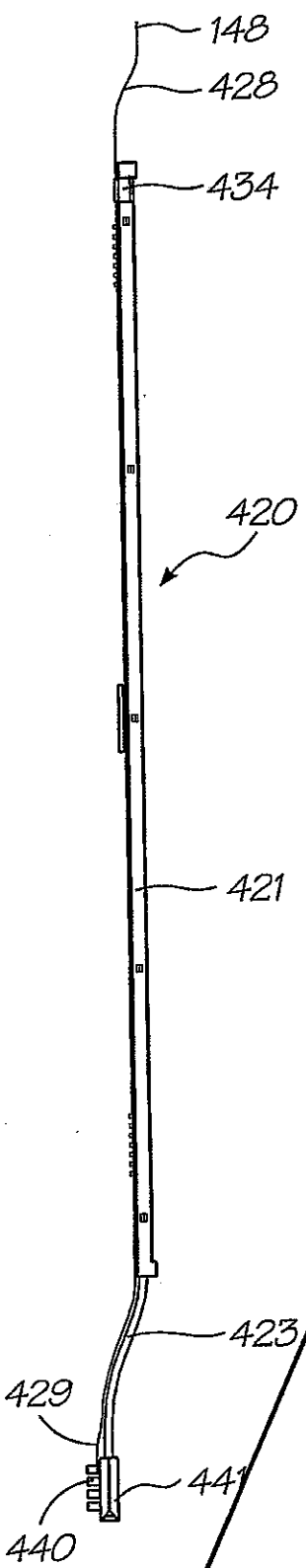

FIG. 21(A)

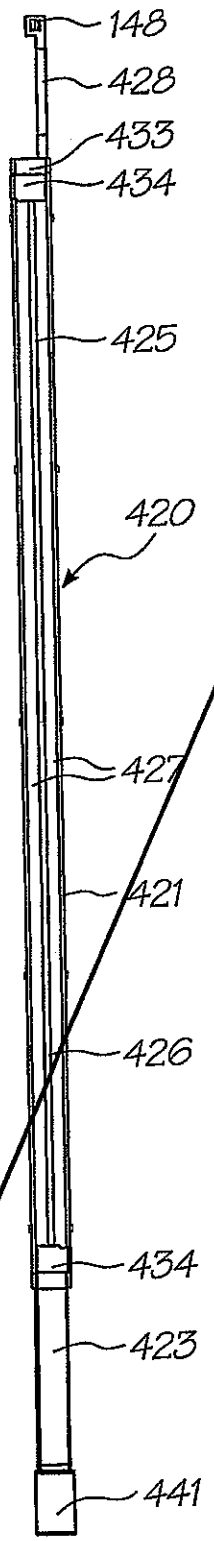

FIG. 21(B)

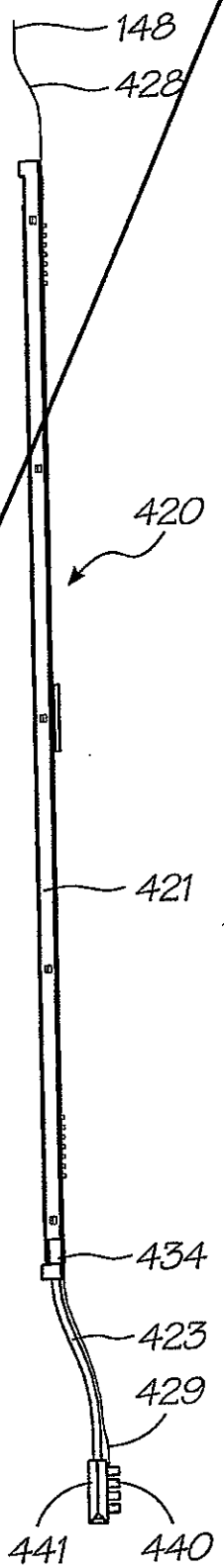

FIG. 21(C)

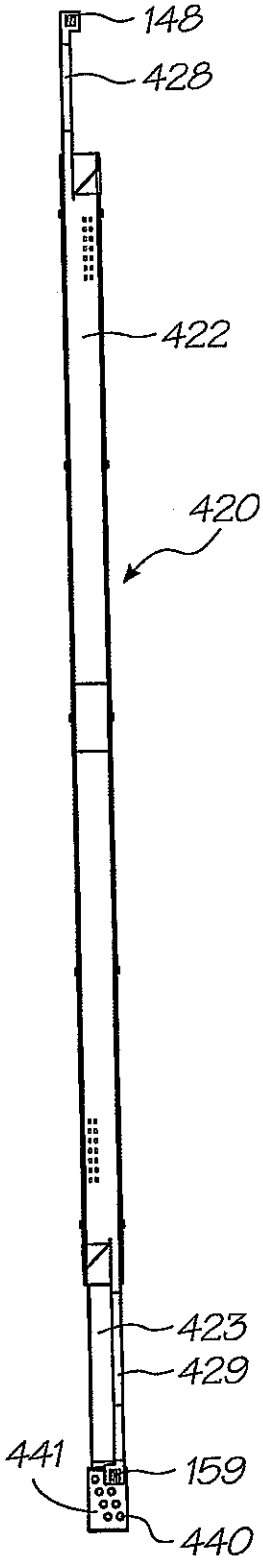

FIG. 21(D)

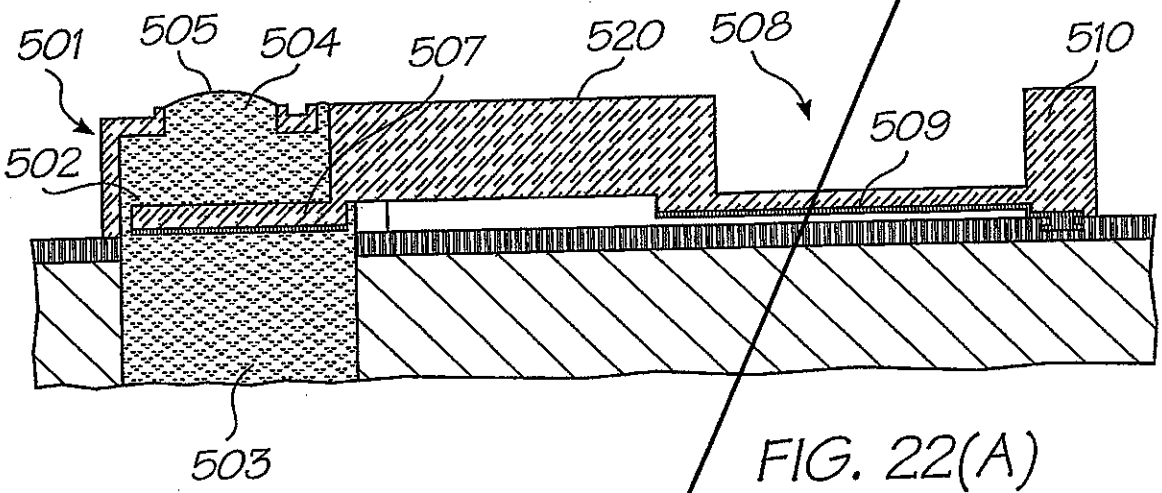

FIG. 22(A)

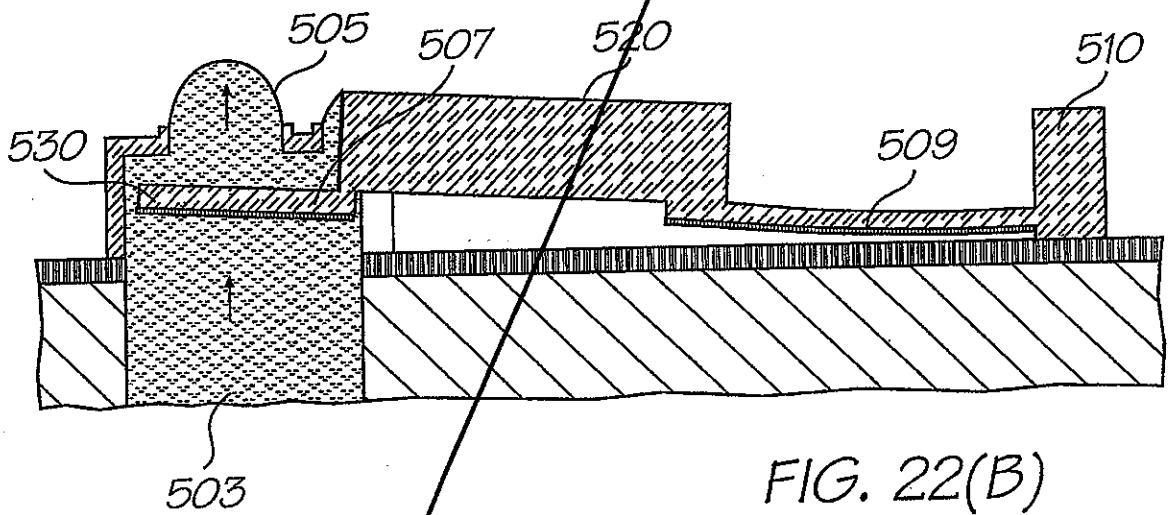

FIG. 22(B)

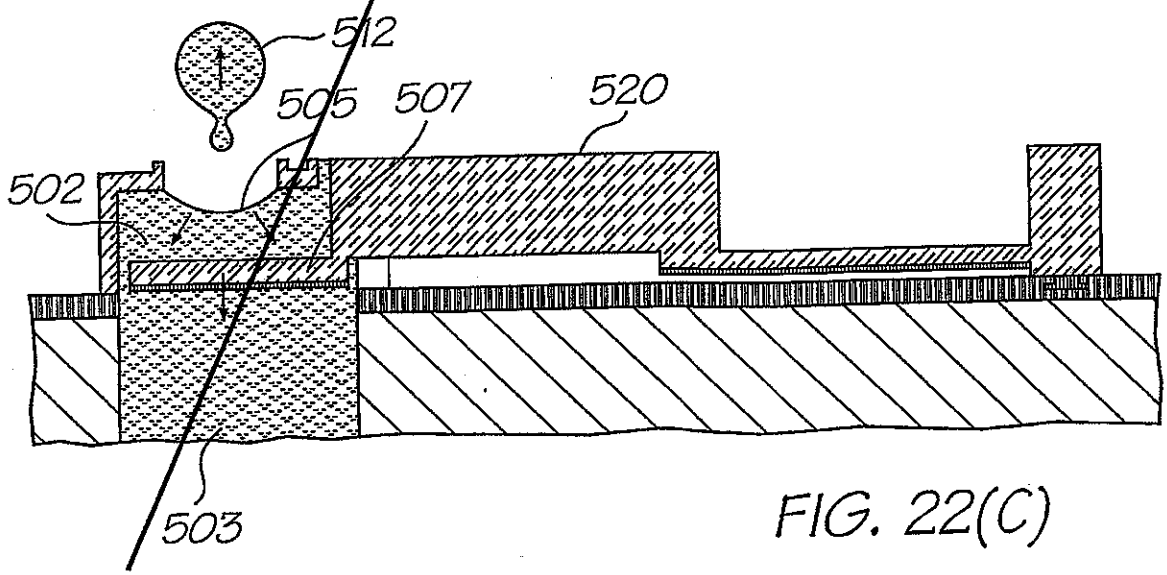

FIG. 22(C)

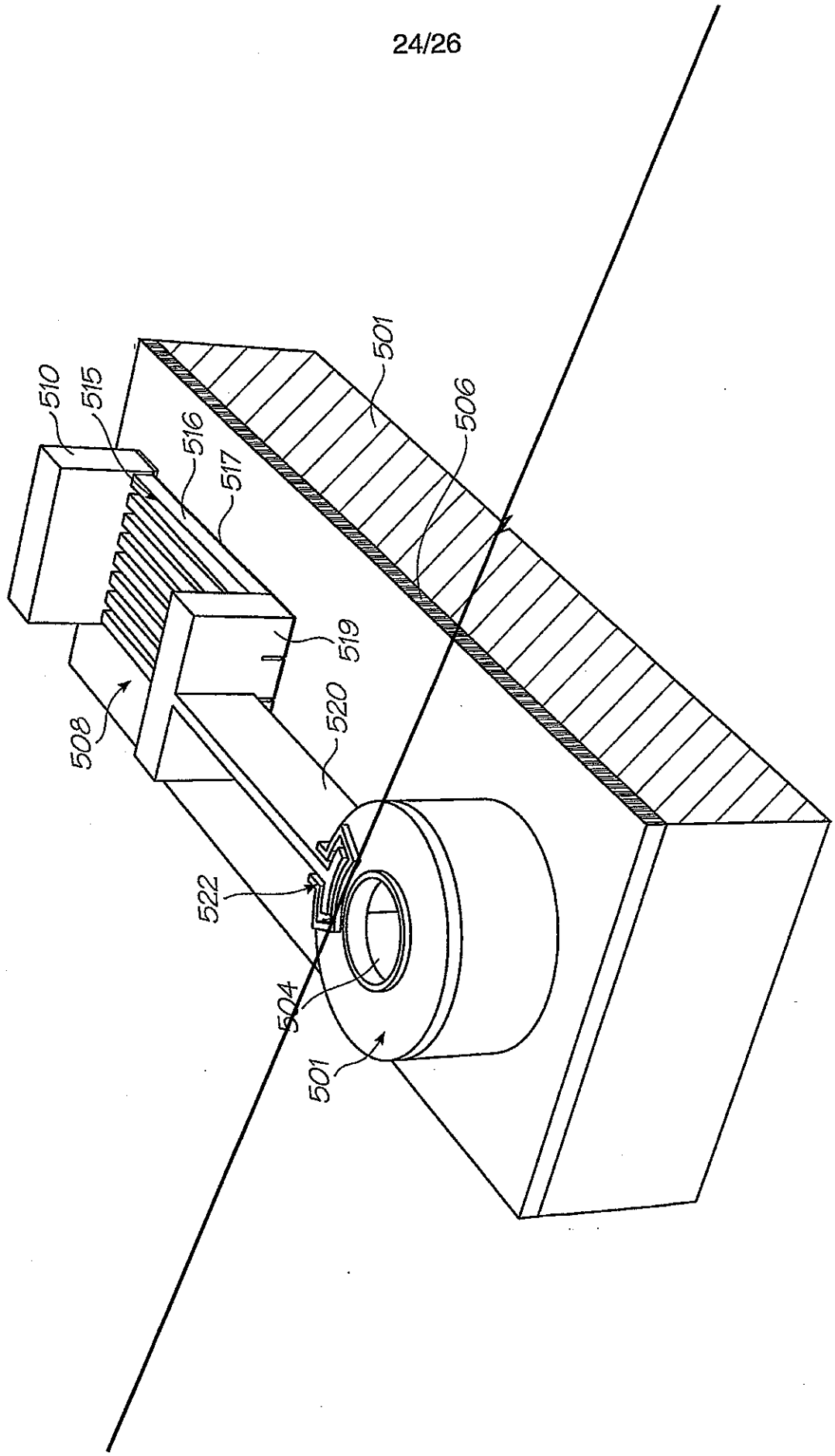

FIG. 23

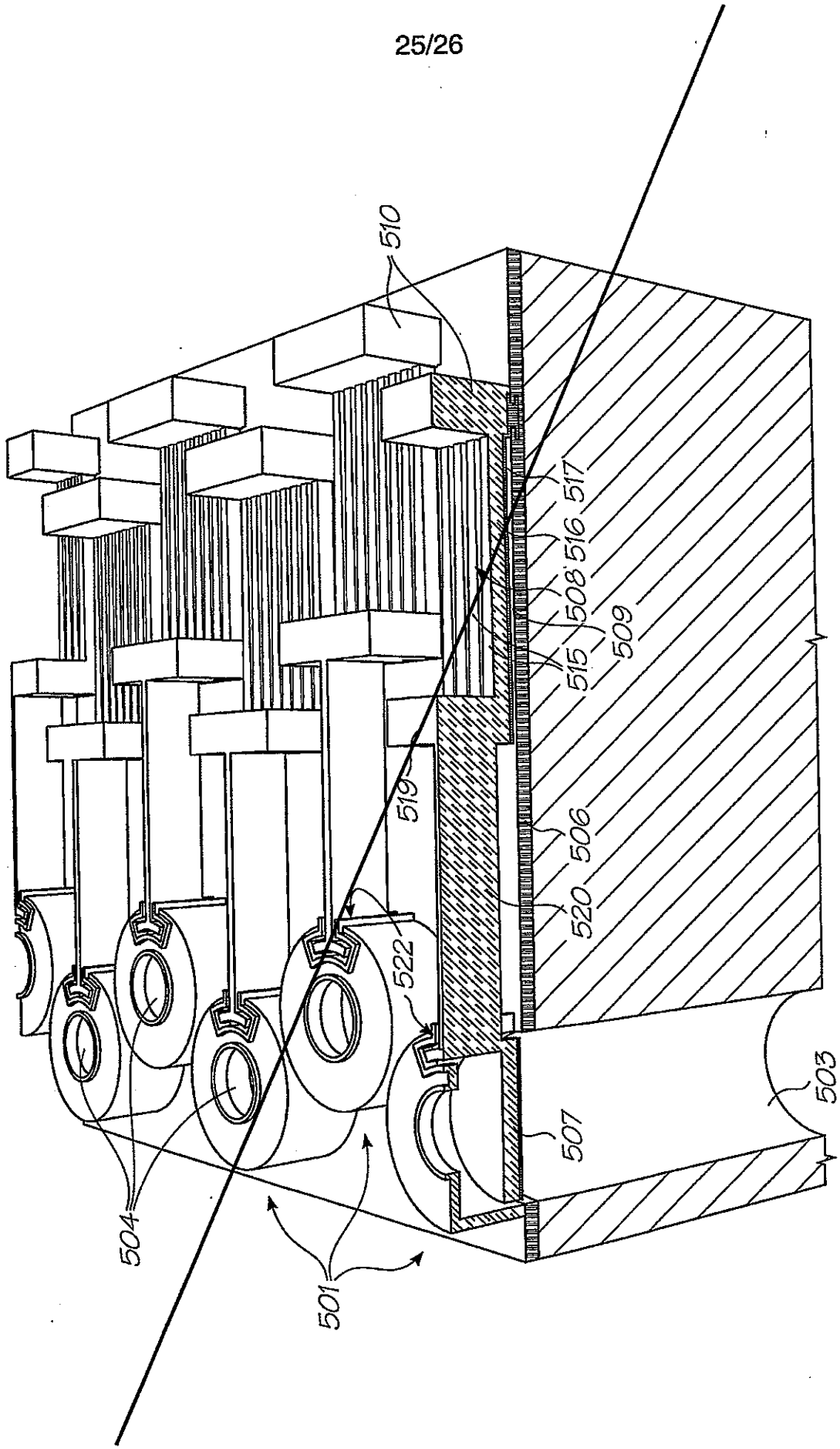

FIG. 24

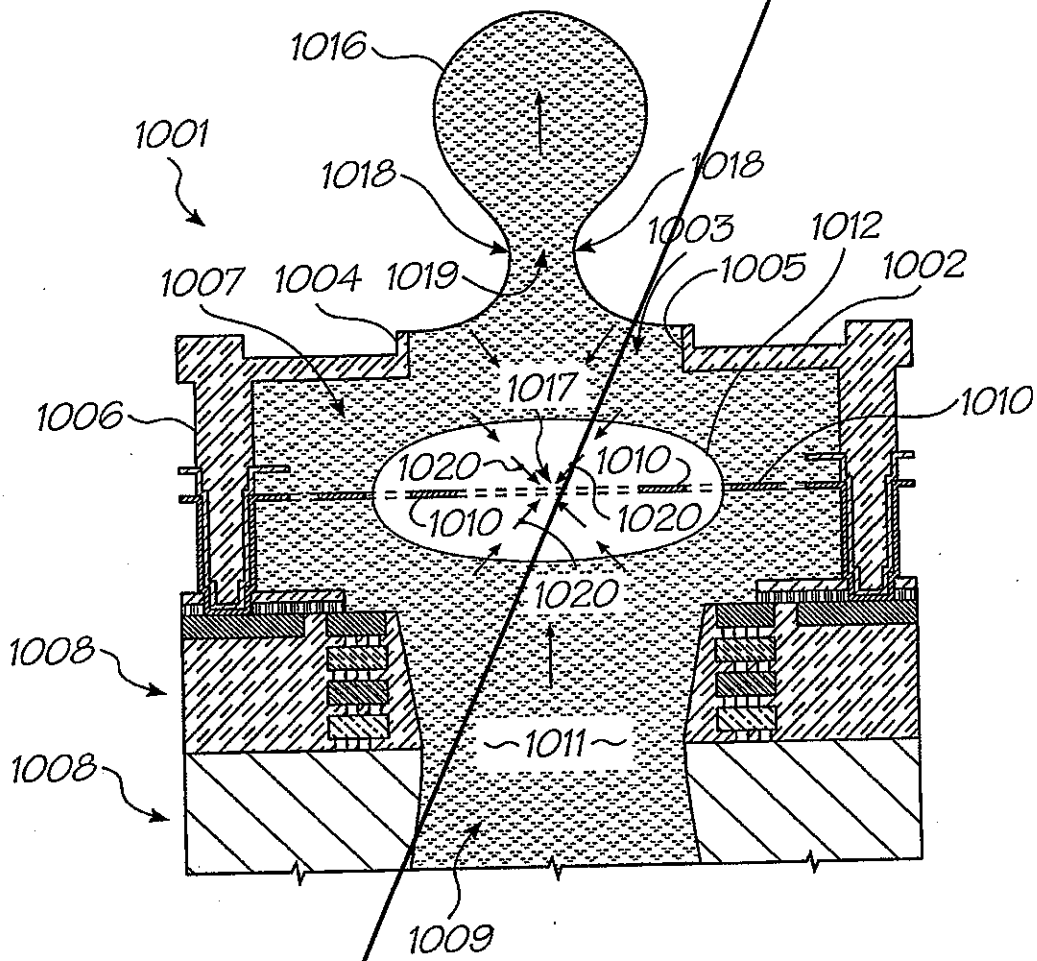
1016
1001
1018
1018
1003
1012
1007
1004
1019
1005
1002
1017
1006
1010
1020
1010
1010
1020
1020
1008
1011
1008
1009

FIG. 25

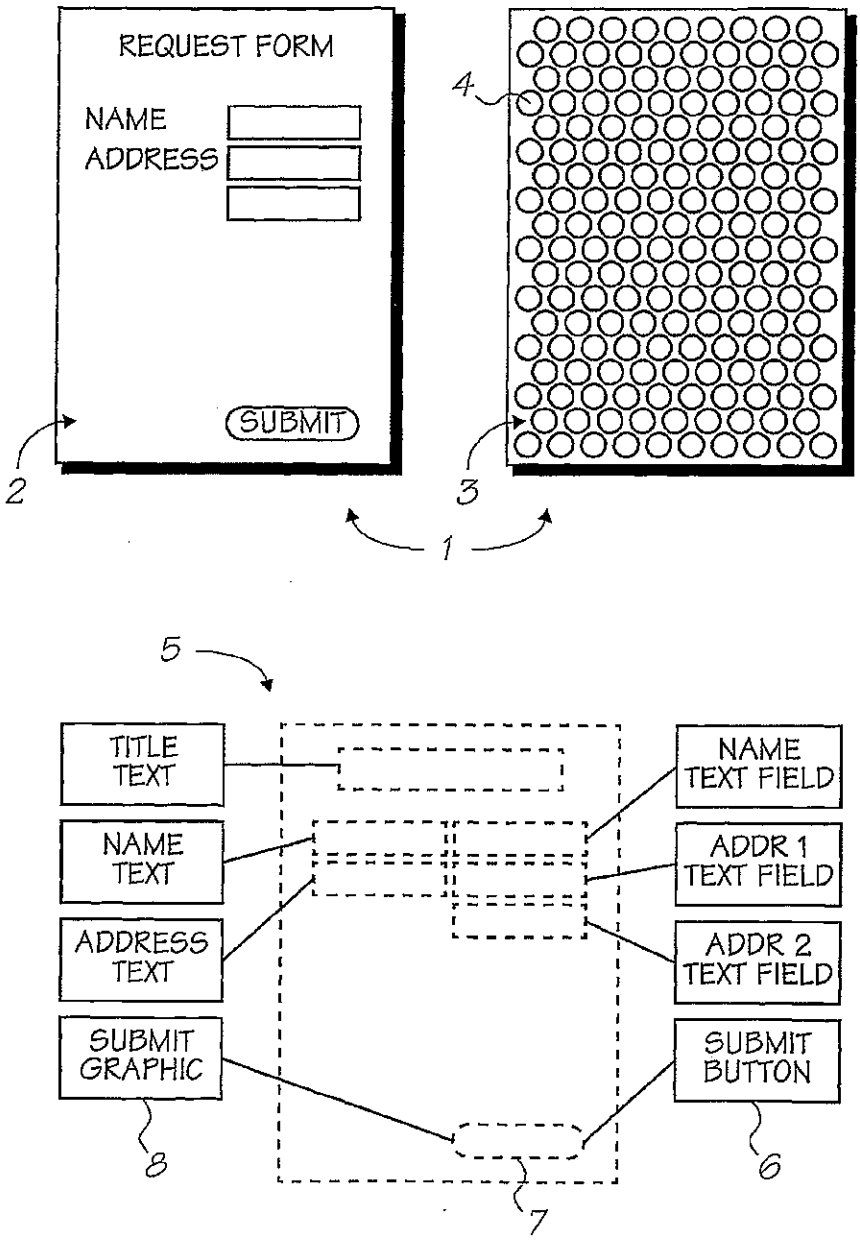
REQUEST FORM
NAME
ADDRESS
SUBMIT
2
4
3
1
5
TITLE TEXT
NAME TEXT
ADDRESS TEXT
SUBMIT GRAPHIC
8
NAME TEXT FIELD
ADDR 1 TEXT FIELD
ADDR 2 TEXT FIELD
SUBMIT BUTTON
6
7

FIG. 1

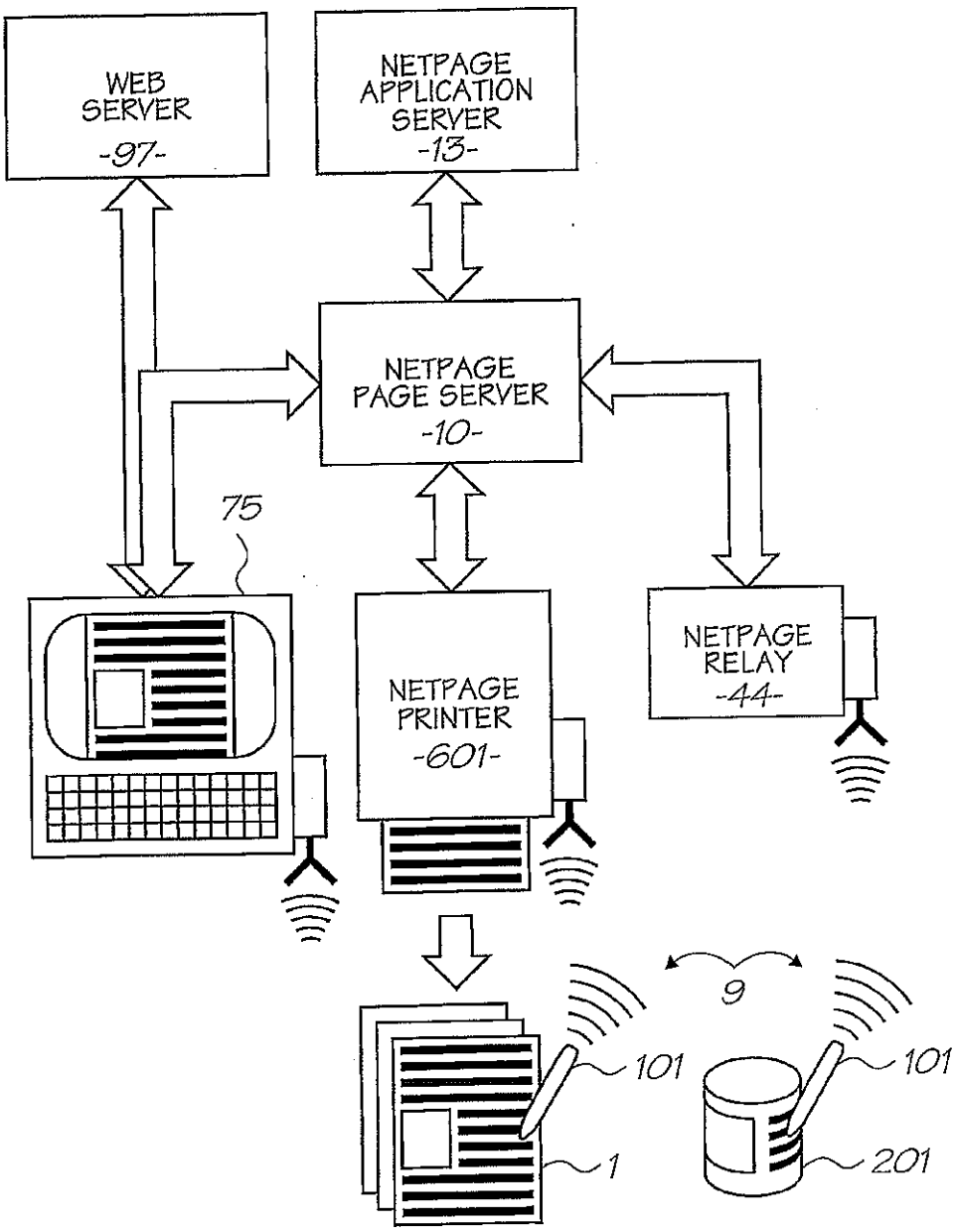
WEB SERVER -97-
NETPAGE APPLICATION SERVER -13-
NETPAGE PAGE SERVER -10-
75
NETPAGE PRINTER -601-
NETPAGE RELAY -44-
9
101
101
1
201

FIG. 2

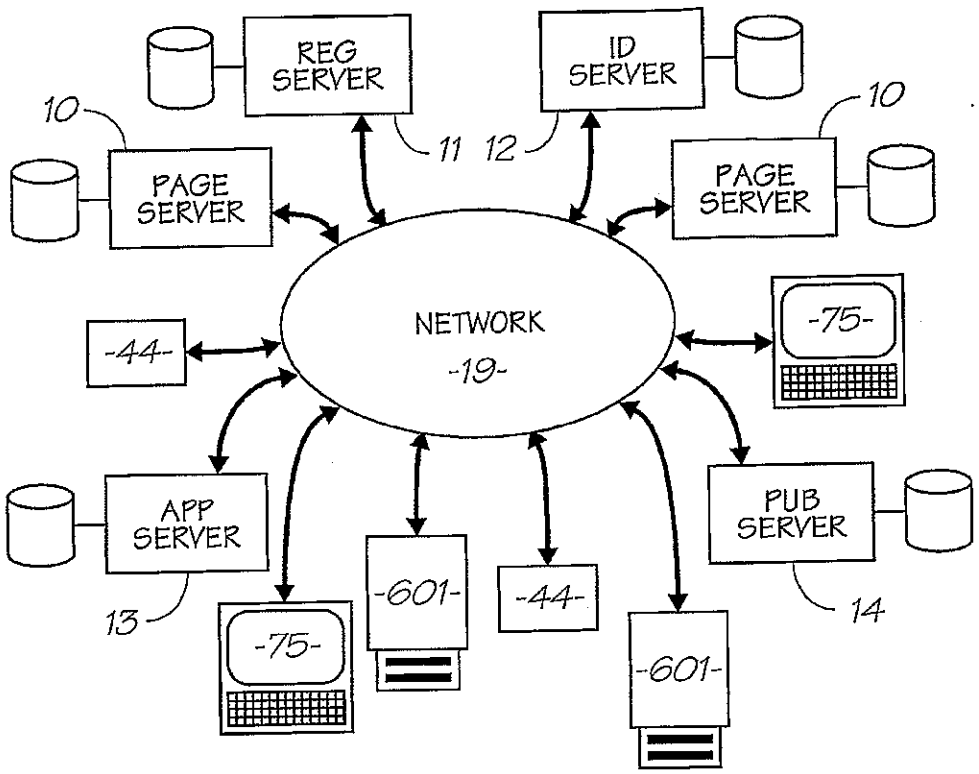
REG SERVER
ID SERVER
10
11
12
10
PAGE SERVER
PAGE SERVER
NETWORK
-19-
-44-
-75-
APP SERVER
PUB SERVER
13
14
-75-
-601-
-44-
-601-

FIG. 3

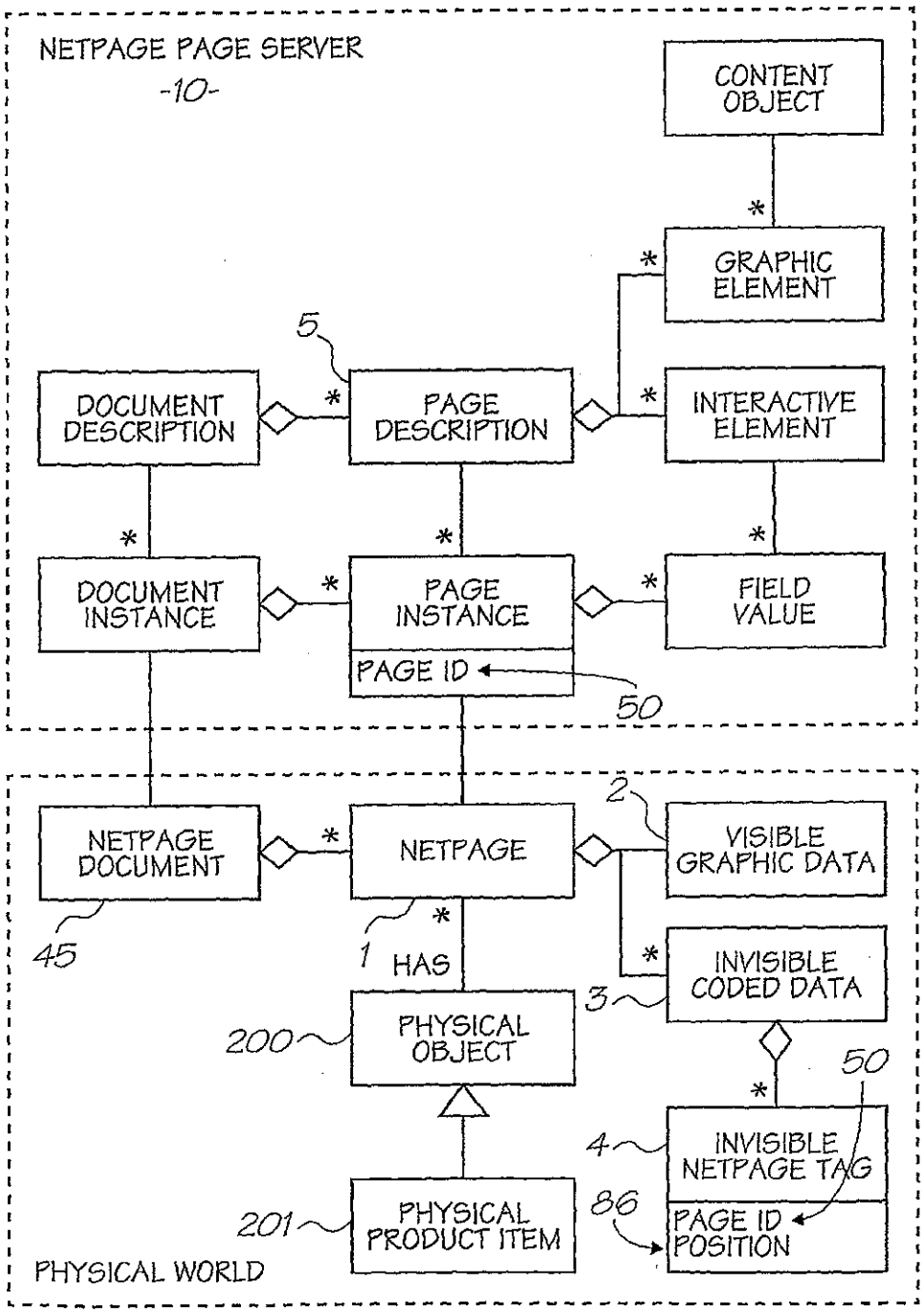
NETPAGE PAGE SERVER
-10-
CONTENT OBJECT
GRAPHIC ELEMENT
INTERACTIVE ELEMENT
FIELD VALUE
5
DOCUMENT DESCRIPTION
PAGE DESCRIPTION
DOCUMENT INSTANCE
PAGE INSTANCE
PAGE ID
50
NETPAGE DOCUMENT
NETPAGE
45
1
HAS
2
VISIBLE GRAPHIC DATA
INVISIBLE CODED DATA
3
200
PHYSICAL OBJECT
50
4
INVISIBLE NETPAGE TAG
86
PAGE ID POSITION
201
PHYSICAL PRODUCT ITEM
PHYSICAL WORLD

FIG. 4

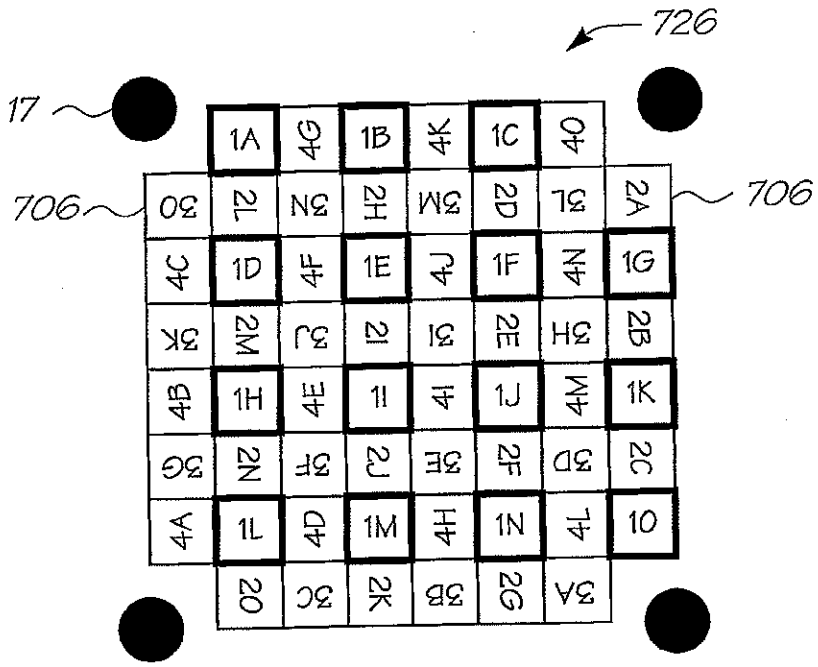
726
17
706
706
1A
4G
1B
4K
1C
4O
3O
2L
3N
2H
3M
2D
3L
2A
4C
1D
4F
1E
4J
1F
4N
1G
3K
2M
3J
2I
3I
2E
3H
2B
4B
1H
4E
1I
4I
1J
4M
1K
3G
2N
3F
2J
3E
2F
3D
2C
4A
1L
4D
1M
4H
1N
4L
1O
2O
3C
2K
3B
2G
3A

FIG. 5A

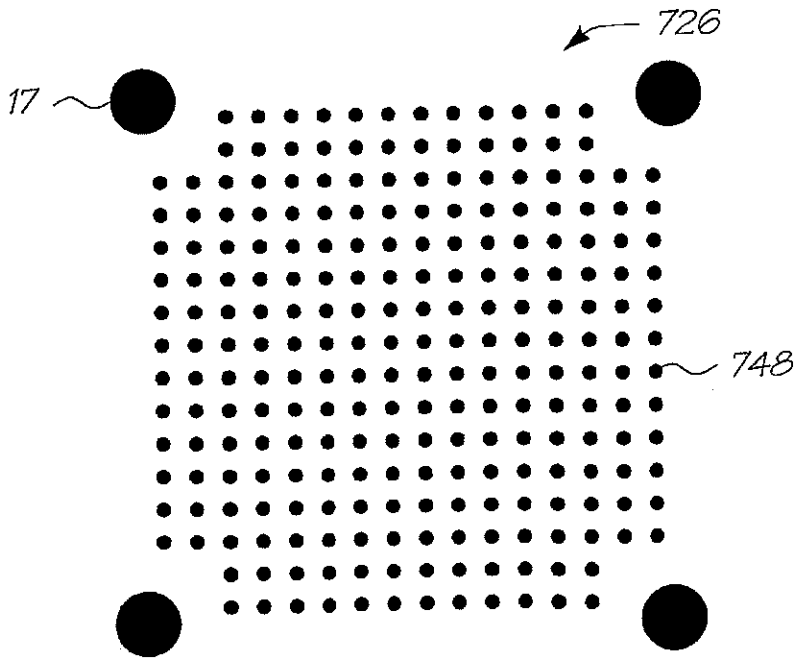
726
17
748

FIG. 5B

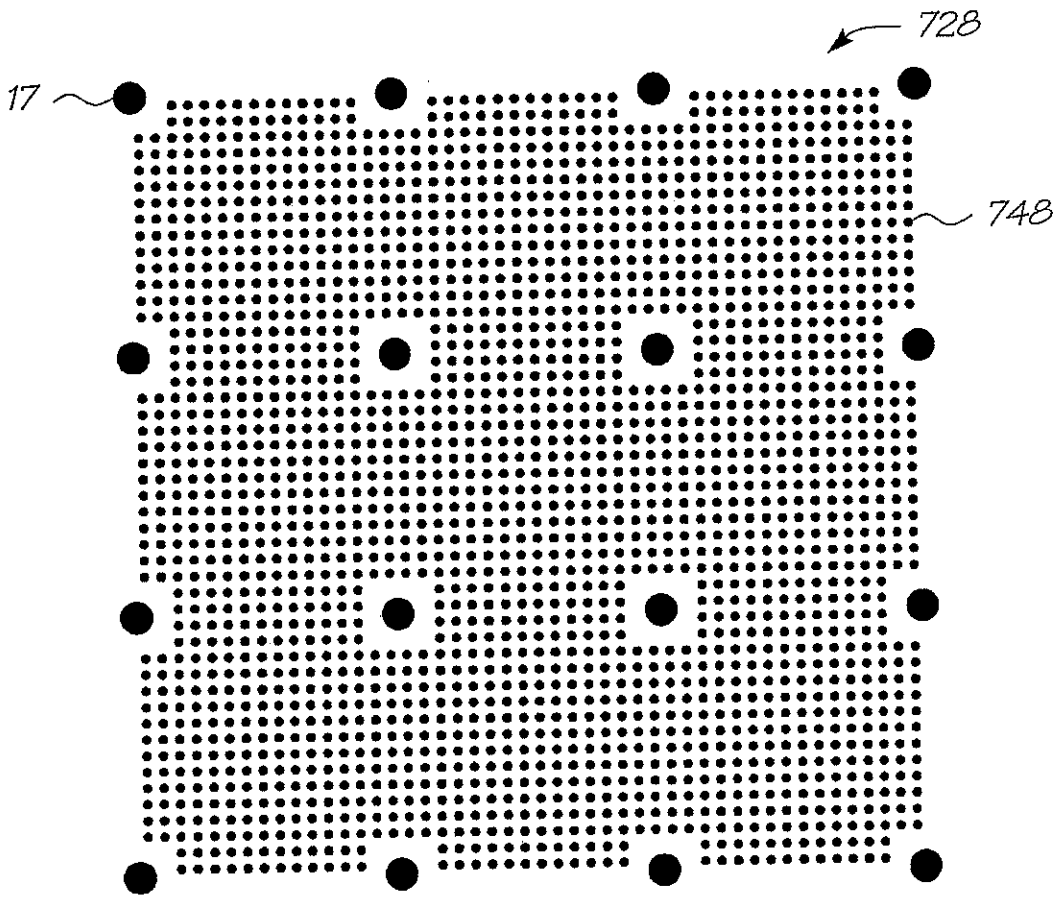

FIG. 5C

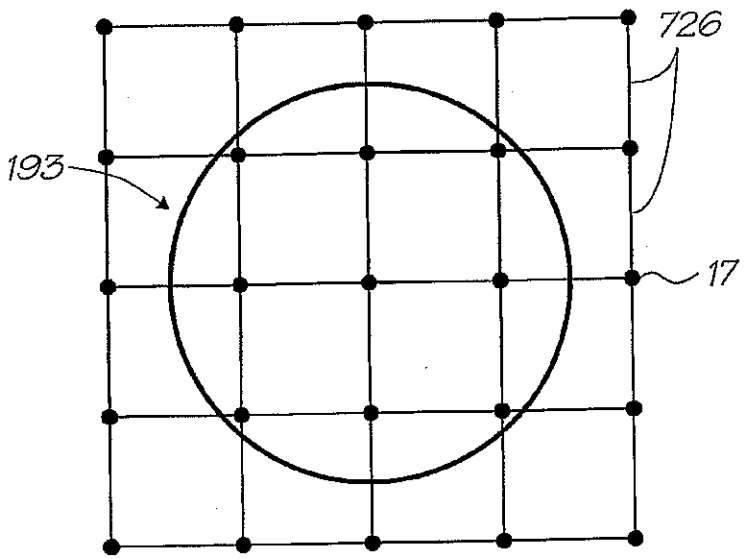

FIG. 5D

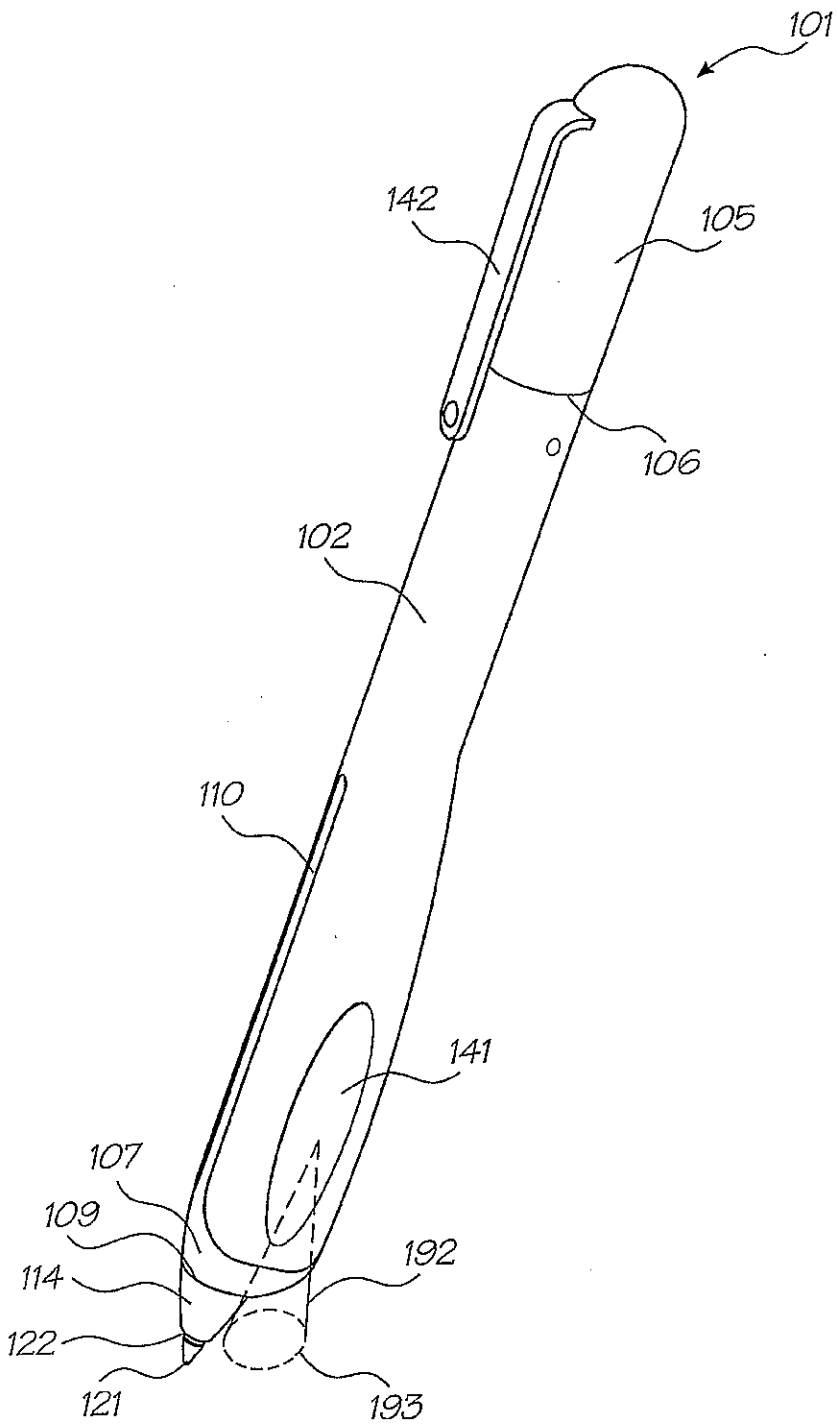

FIG. 6

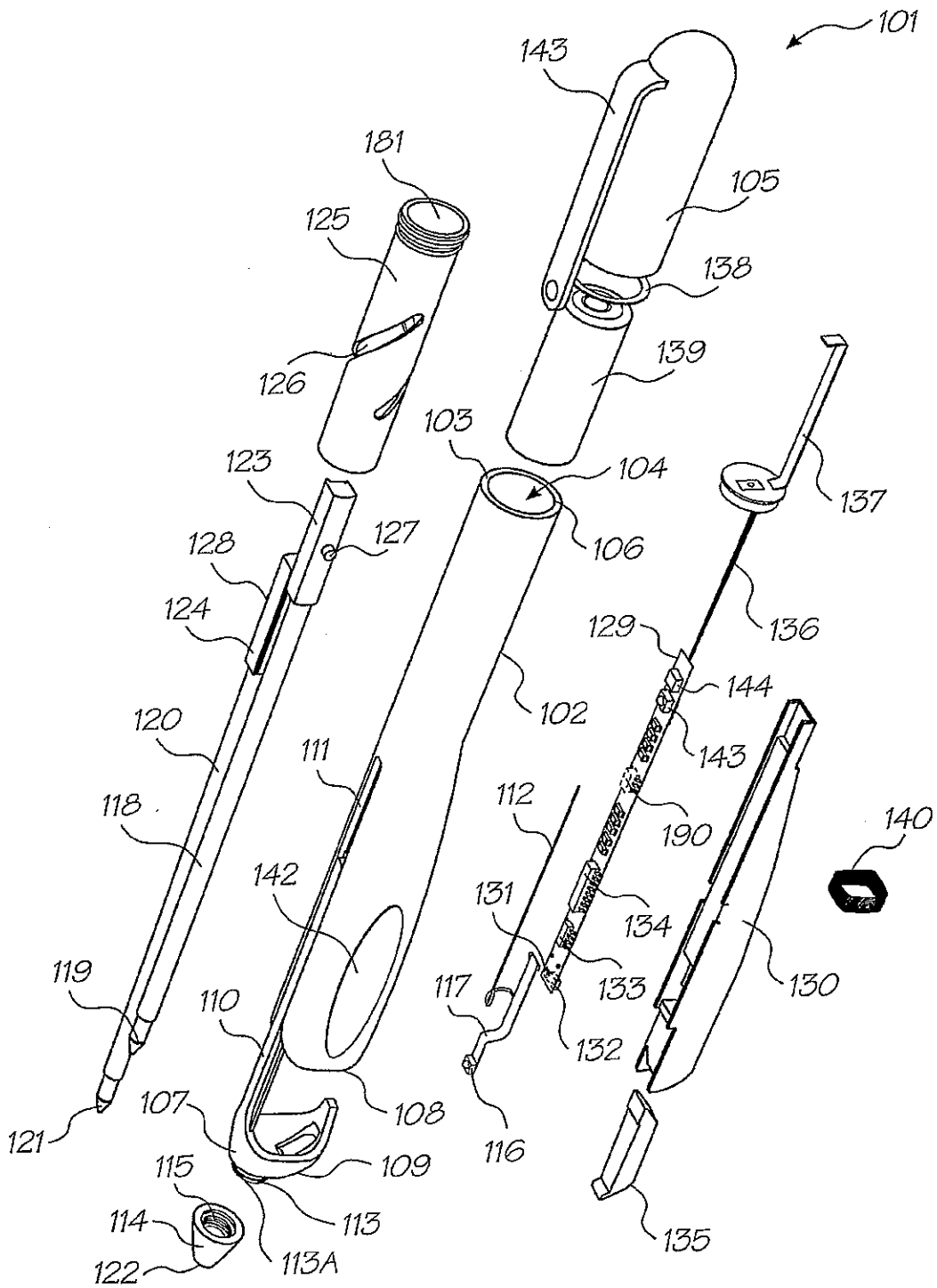
101
143
181
105
125
138
126
139
103
104
123
137
127
106
128
136
124
129
144
102
120
143
111
112
118
190
140
142
131
134
119
133
130
117
110
132
107
108
116
109
115
135
114
113
122
113A

FIG. 7

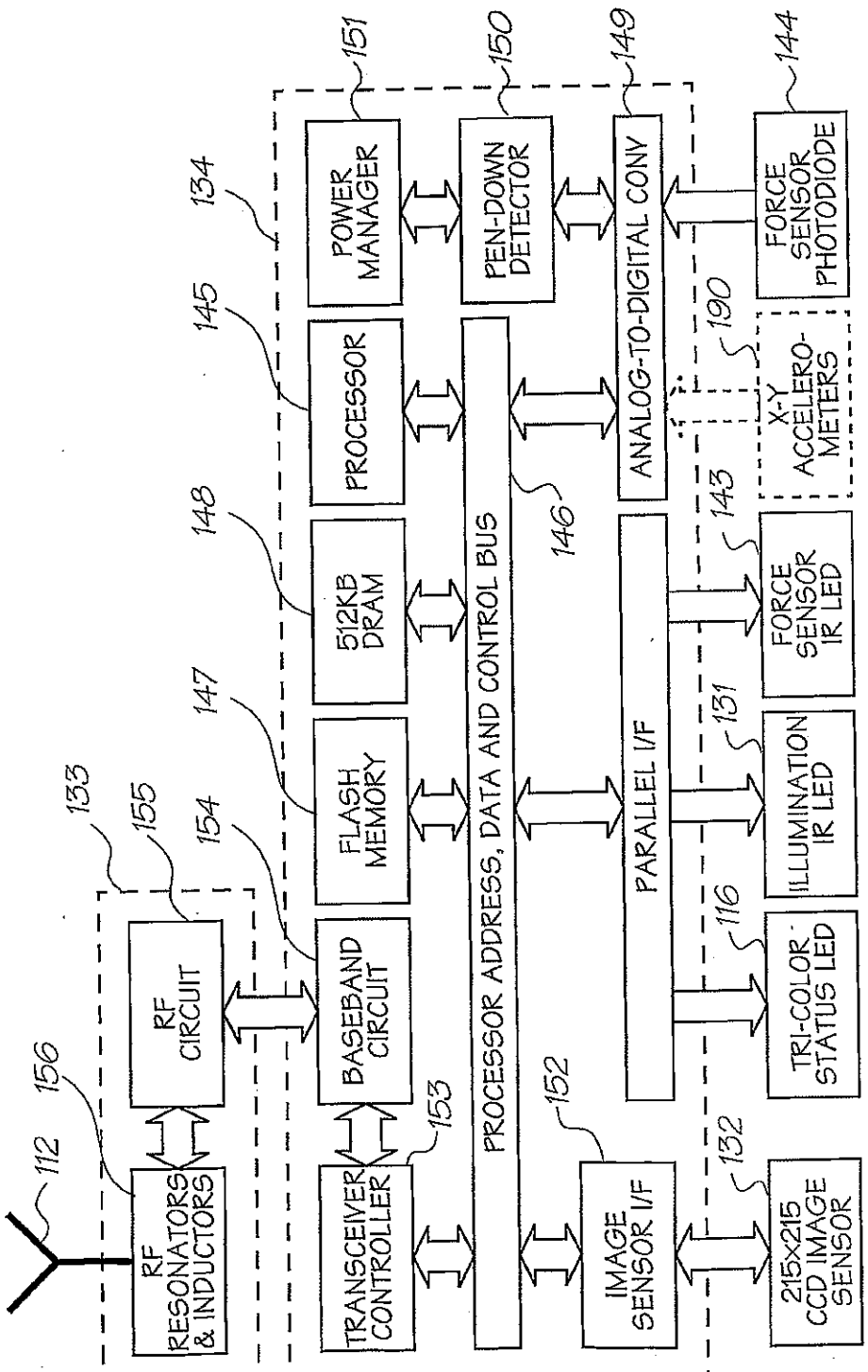
112
156
RF RESONATORS & INDUCTORS
133
155
RF CIRCUIT
154
BASEBAND CIRCUIT
147
FLASH MEMORY
148
512KB DRAM
145
PROCESSOR
134
151
POWER MANAGER
150
PEN-DOWN DETECTOR
149
ANALOG-TO-DIGITAL CONV
144
FORCE SENSOR PHOTODIODE
190
X-Y ACCELERO-METERS
153
TRANSCEIVER CONTROLLER
PROCESSOR ADDRESS, DATA AND CONTROL BUS
146
152
IMAGE SENSOR I/F
PARALLEL I/F
143
FORCE SENSOR IR LED
131
ILLUMINATION IR LED
116
TRI-COLOR STATUS LED
132
215×215 CCD IMAGE SENSOR

FIG. 8

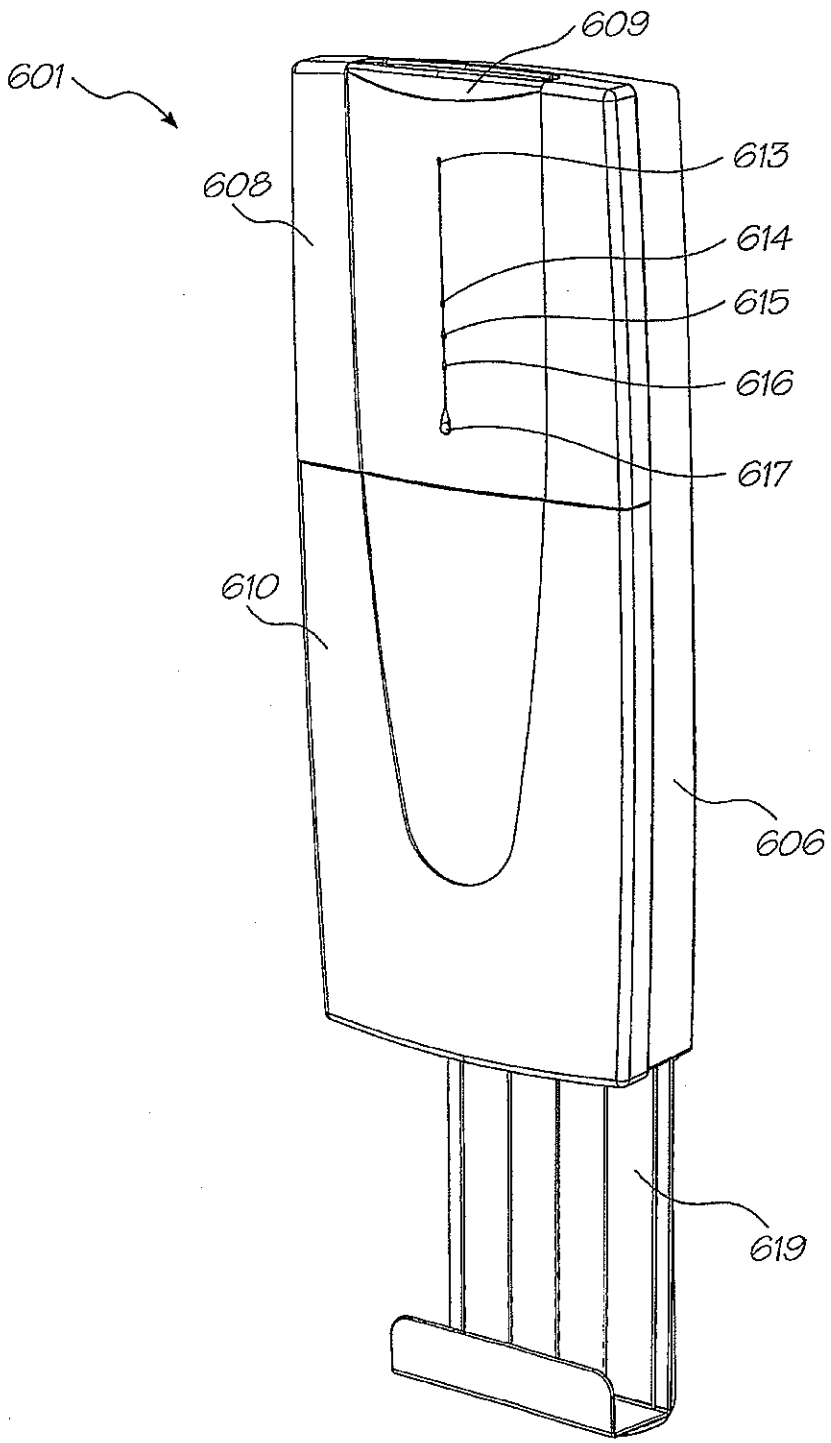

FIG. 9

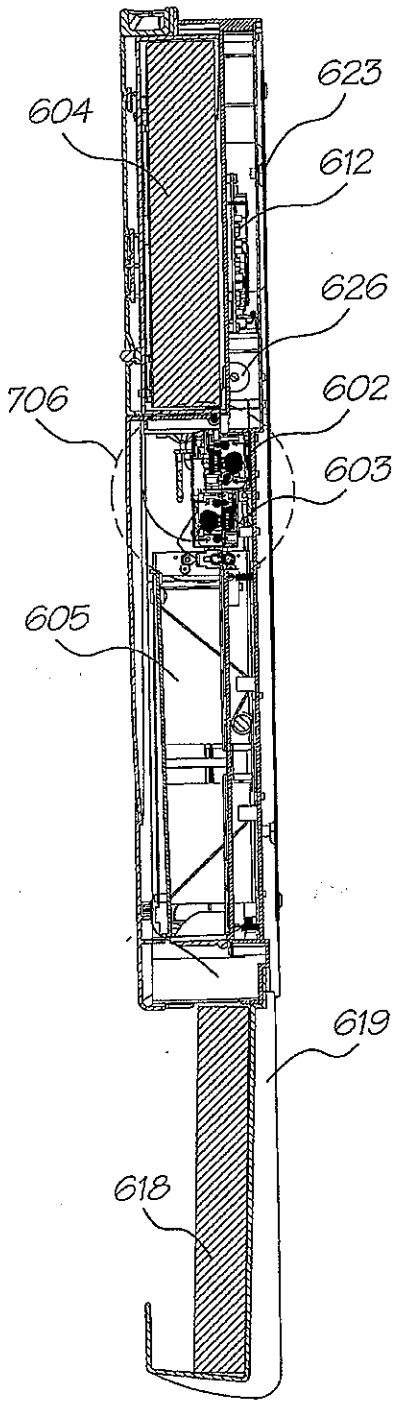

FIG. 10

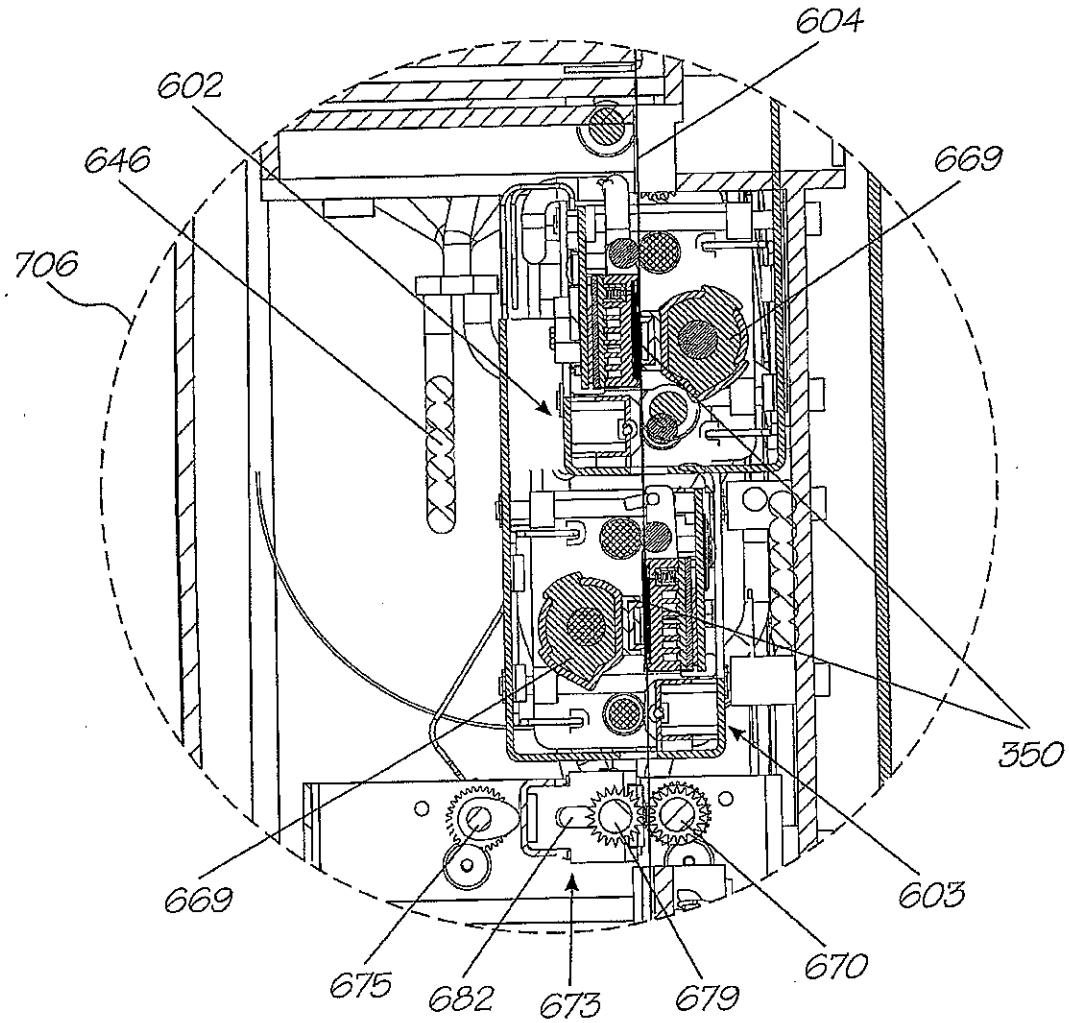

FIG. 10A

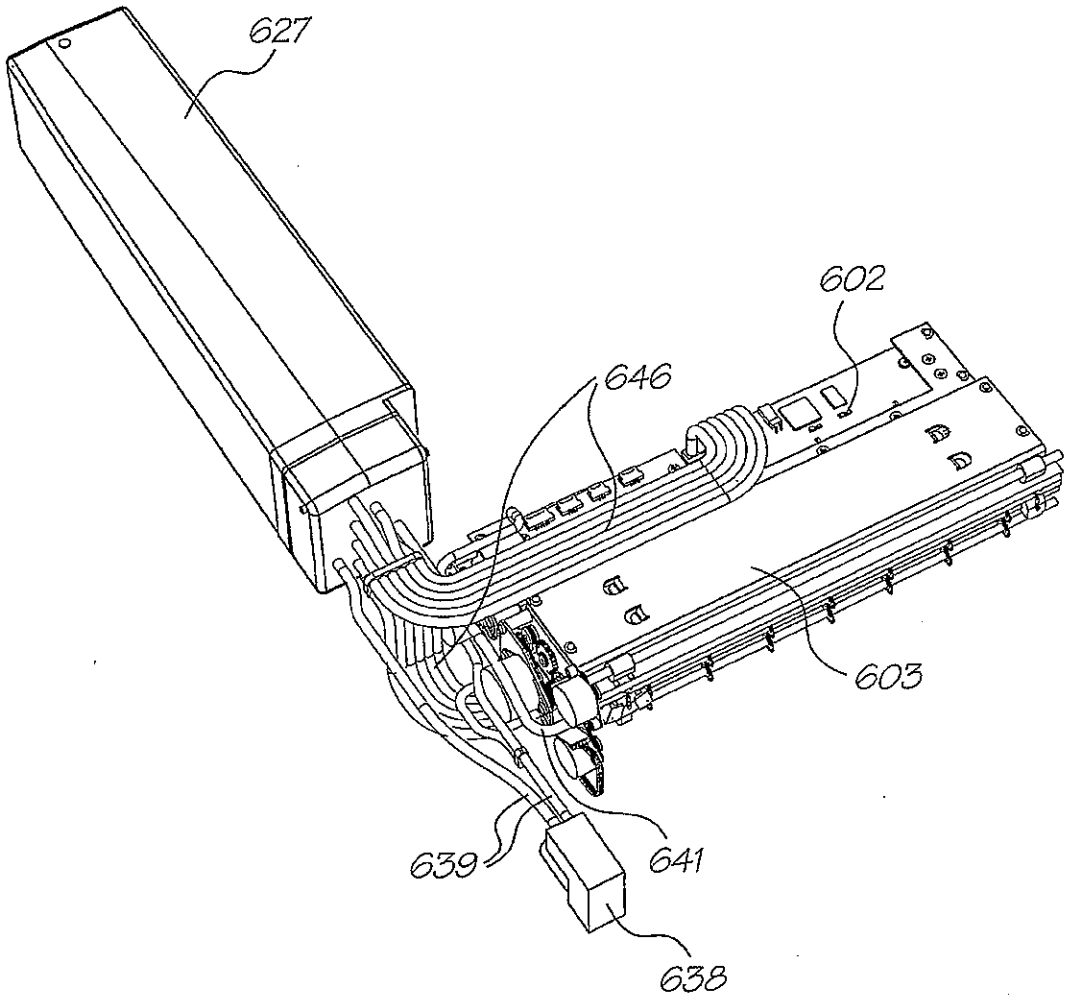

FIG. 11

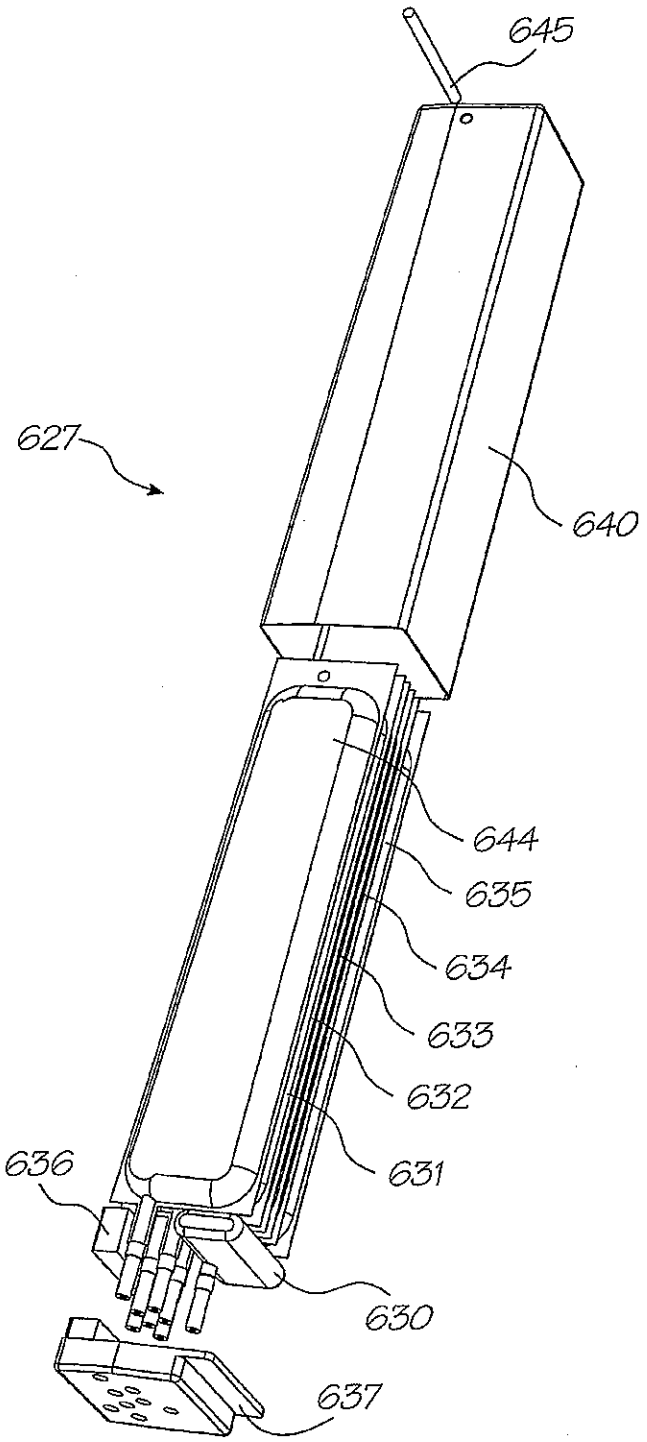

FIG. 12

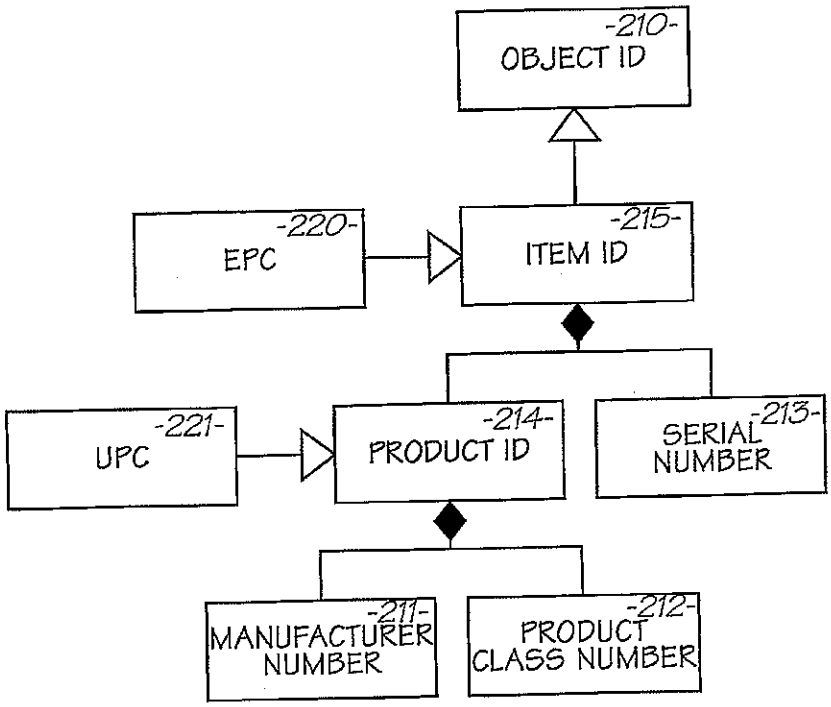
OBJECT ID
-210-
EPC
-220-
ITEM ID
-215-
UPC
-221-
PRODUCT ID
-214-
SERIAL NUMBER
-213-
MANUFACTURER NUMBER
-211-
PRODUCT CLASS NUMBER
-212-

FIG. 13

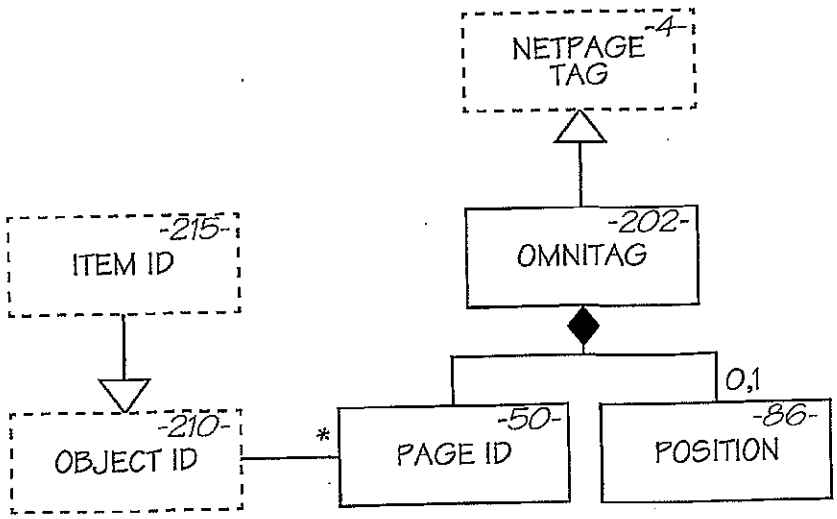
NETPAGE TAG
-4-
ITEM ID
-215-
OMNITAG
-202-
OBJECT ID
-210-
*
PAGE ID
-50-
0,1
POSITION
-86-

FIG. 14

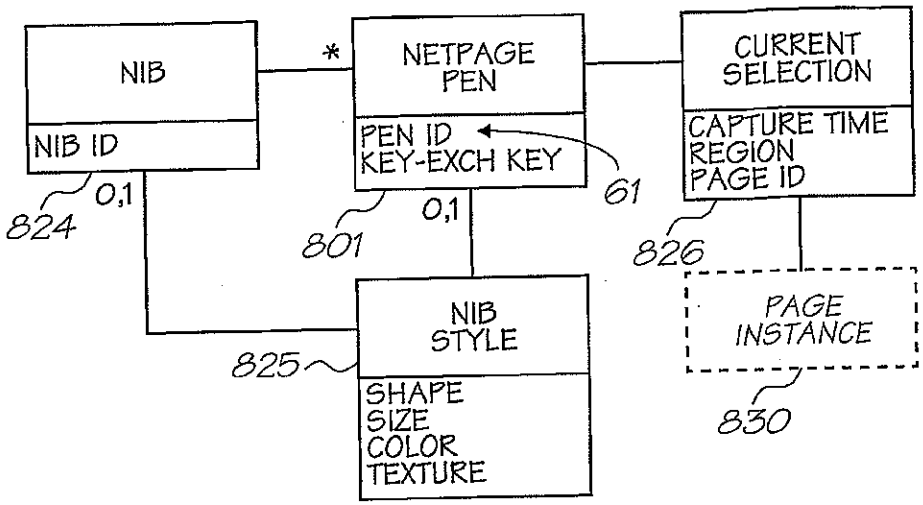
NIB
NIB ID
*
NETPAGE PEN
PEN ID
KEY-EXCH KEY
CURRENT SELECTION
CAPTURE TIME
REGION
PAGE ID
0,1
824
0,1
801
61
826
NIB STYLE
825
SHAPE
SIZE
COLOR
TEXTURE
PAGE INSTANCE
830

FIG. 15

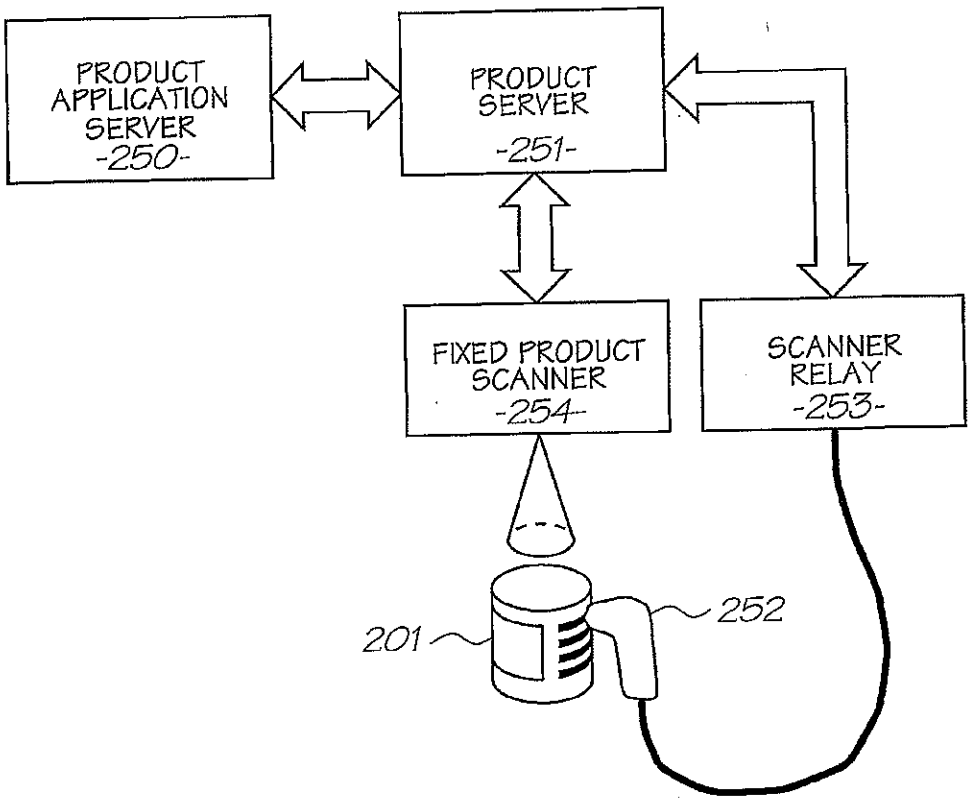
PRODUCT APPLICATION SERVER -250-
PRODUCT SERVER -251-
FIXED PRODUCT SCANNER -254-
SCANNER RELAY -253-
201
252

FIG. 16

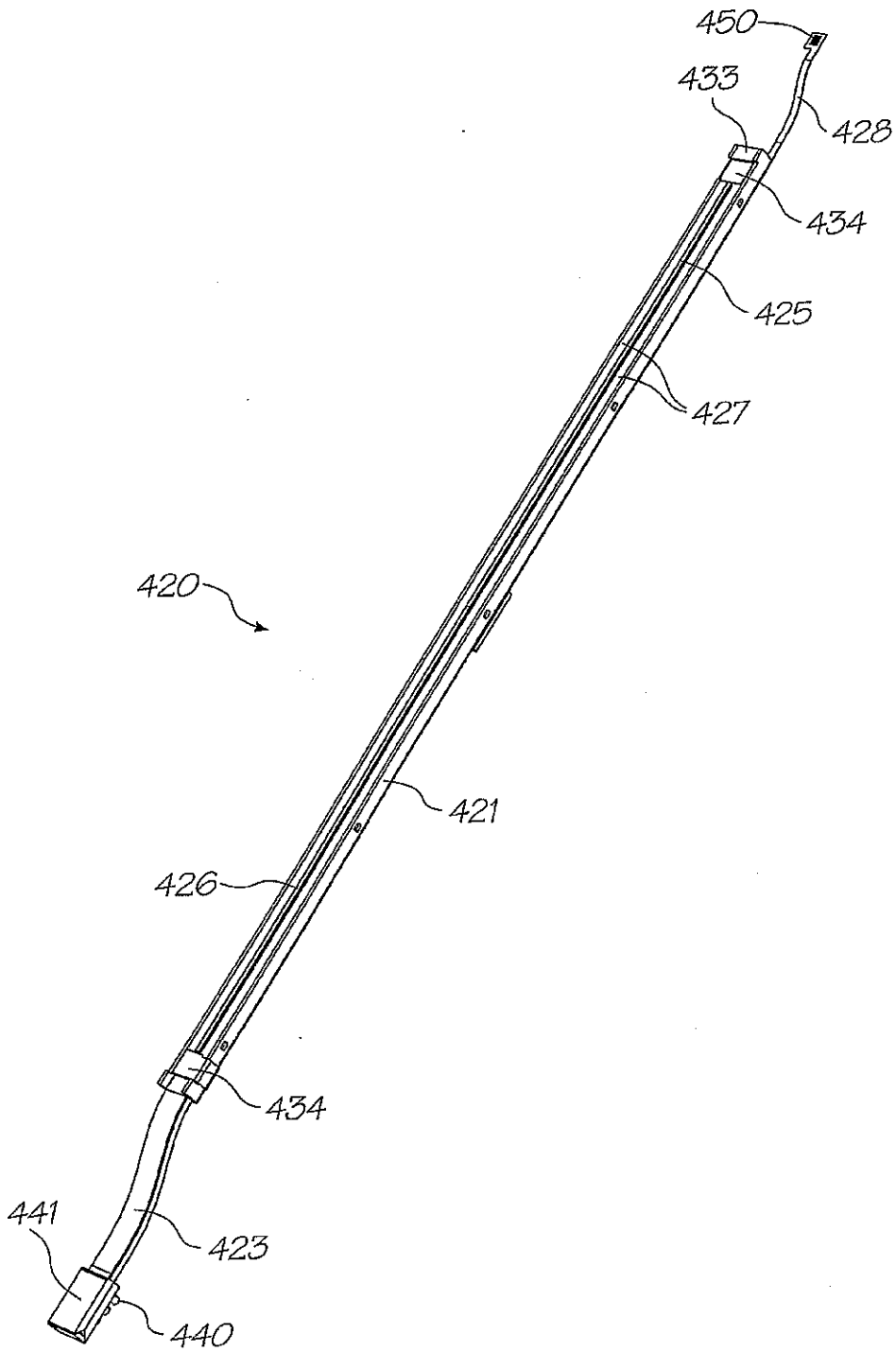

FIG. 17

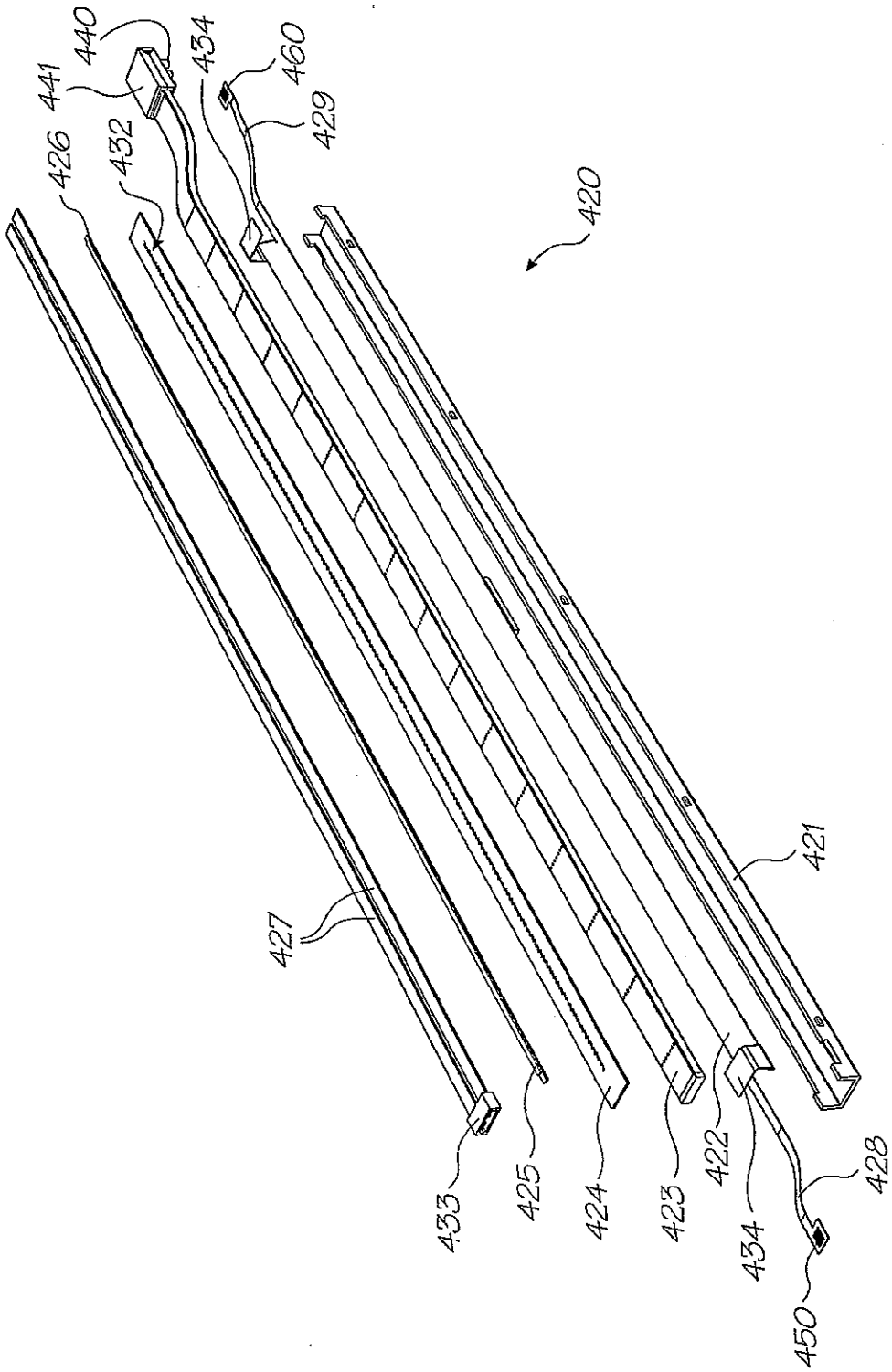
440
441
434
460
426
432
429
420
427
421
433
425
424
423
422
434
428
450

FIG. 18

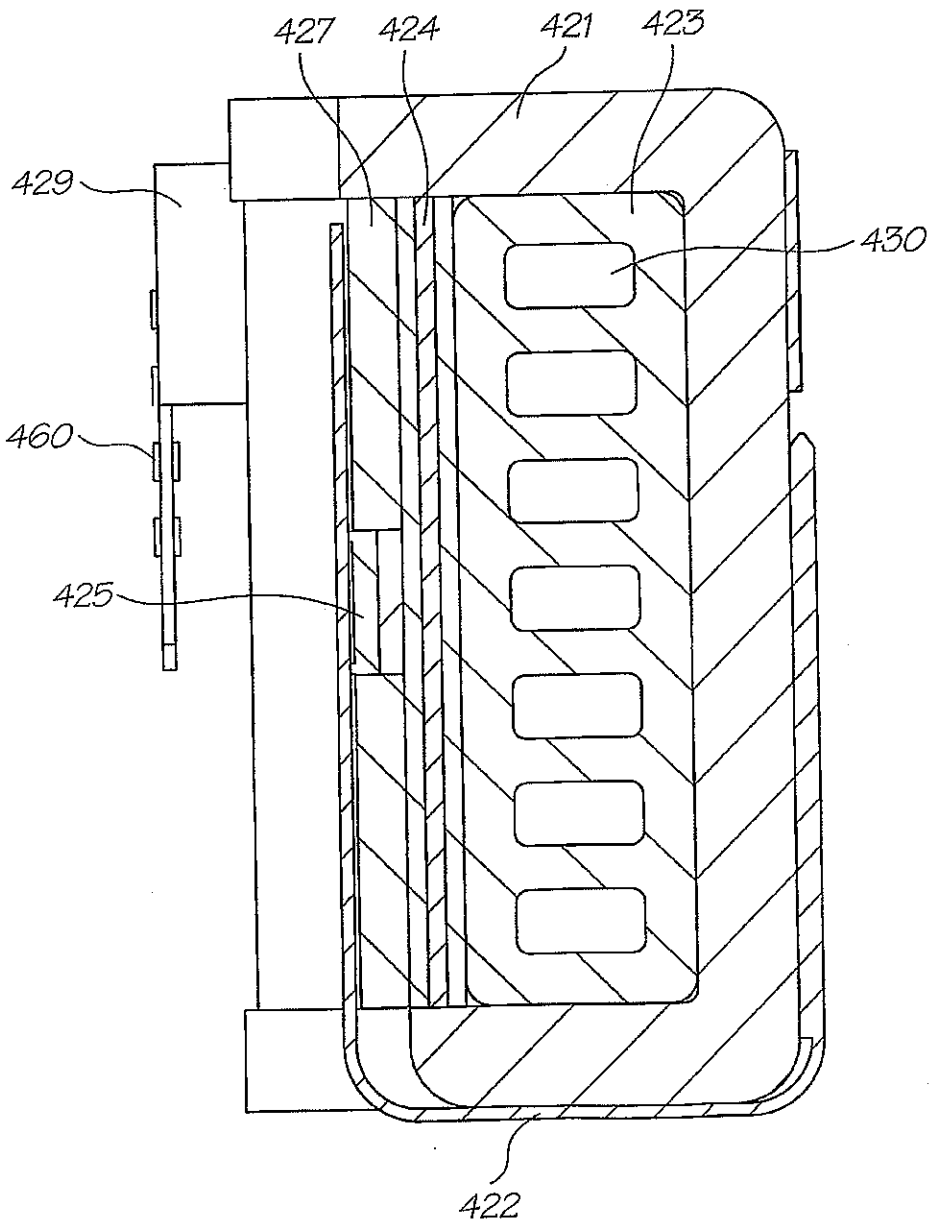

FIG. 19

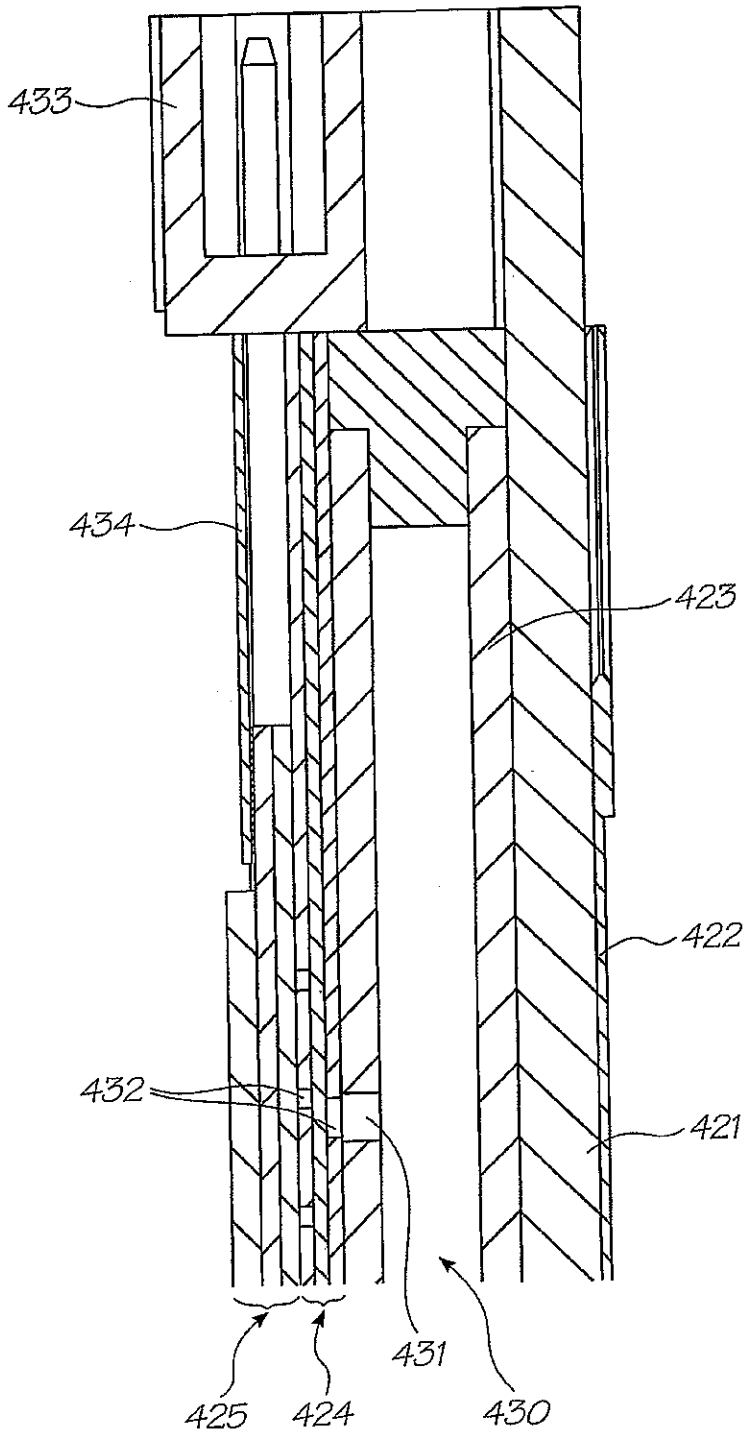

FIG. 20

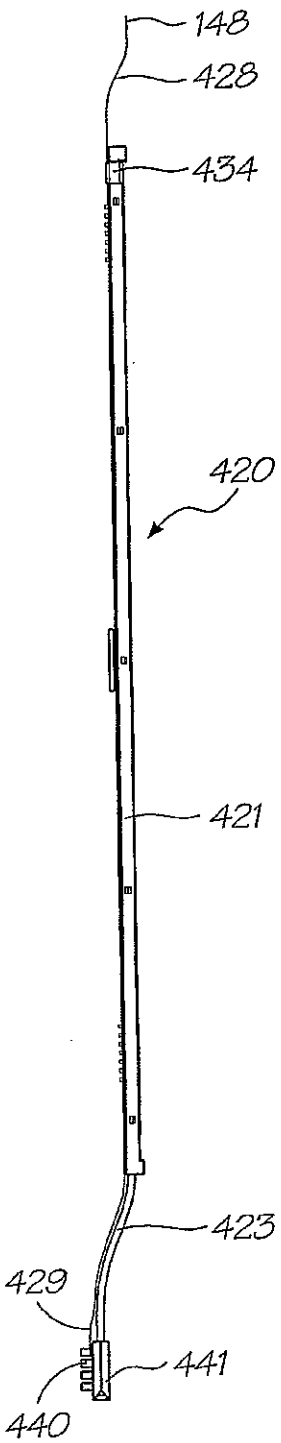

FIG. 21(A)

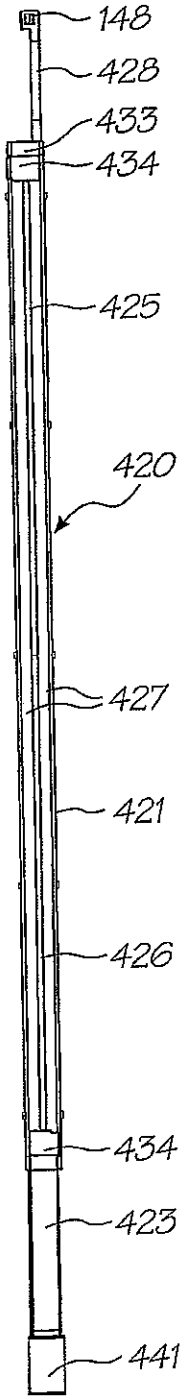

FIG. 21(B)

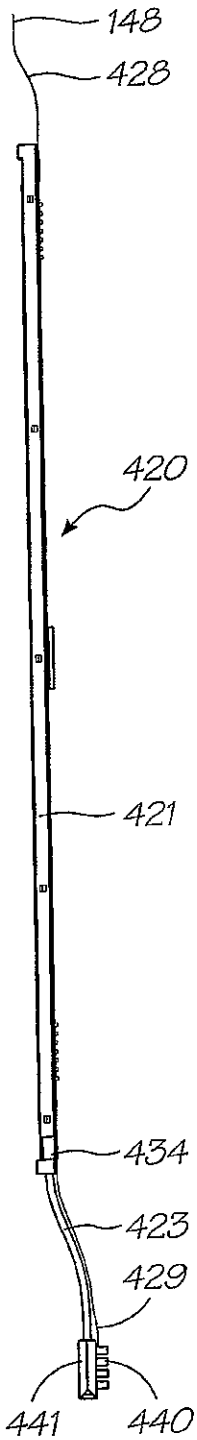

FIG. 21(C)

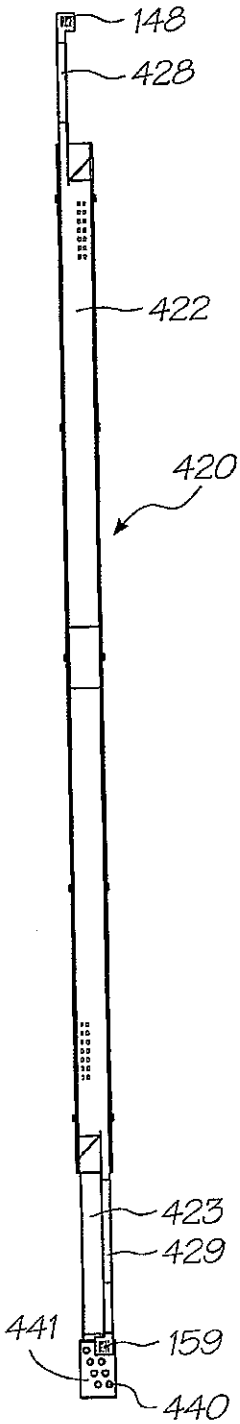

FIG. 21(D)

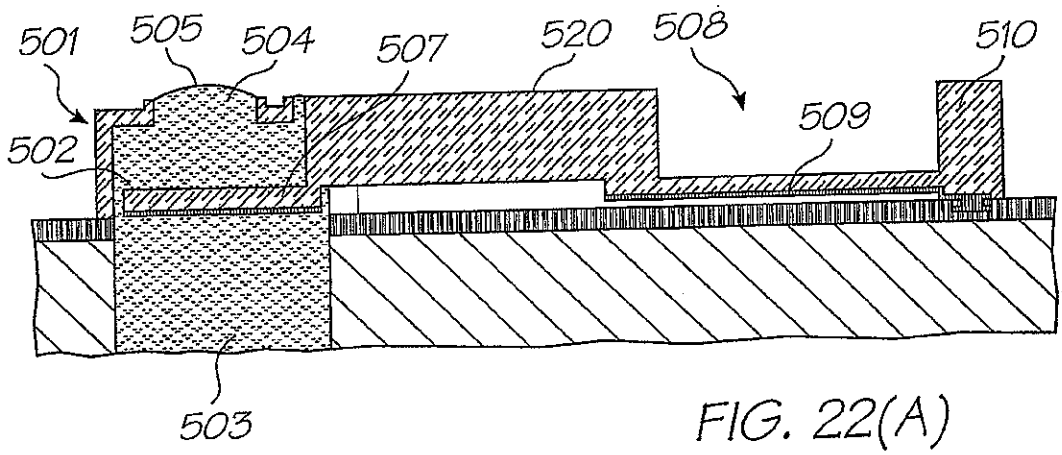

FIG. 22(A)

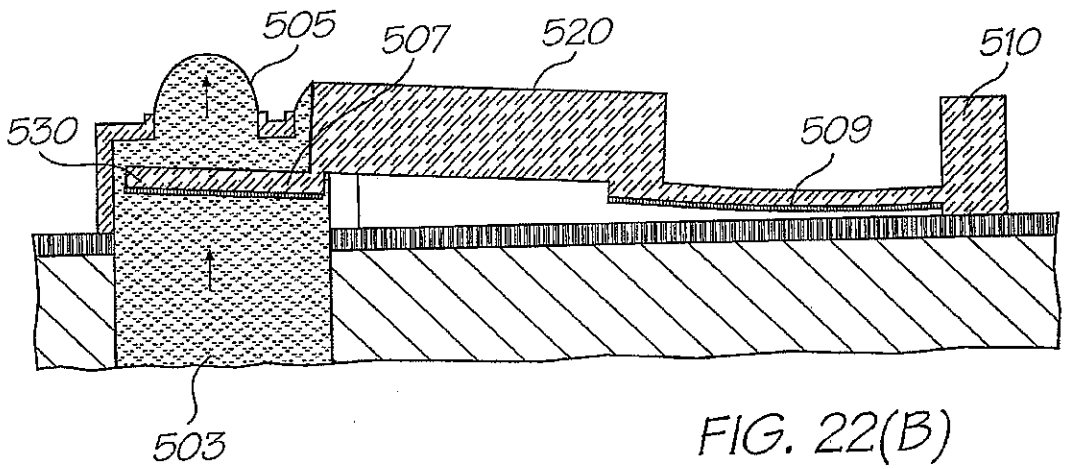

FIG. 22(B)

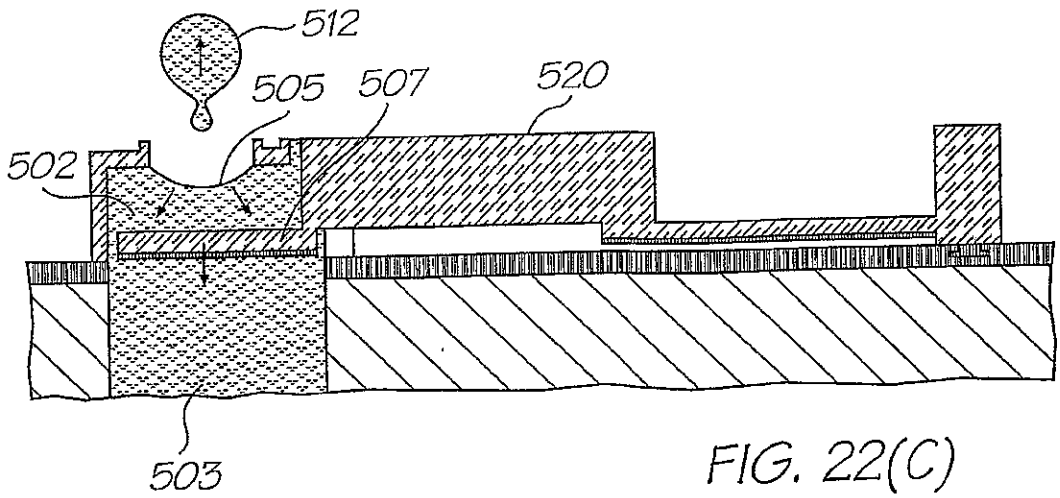

FIG. 22(C)

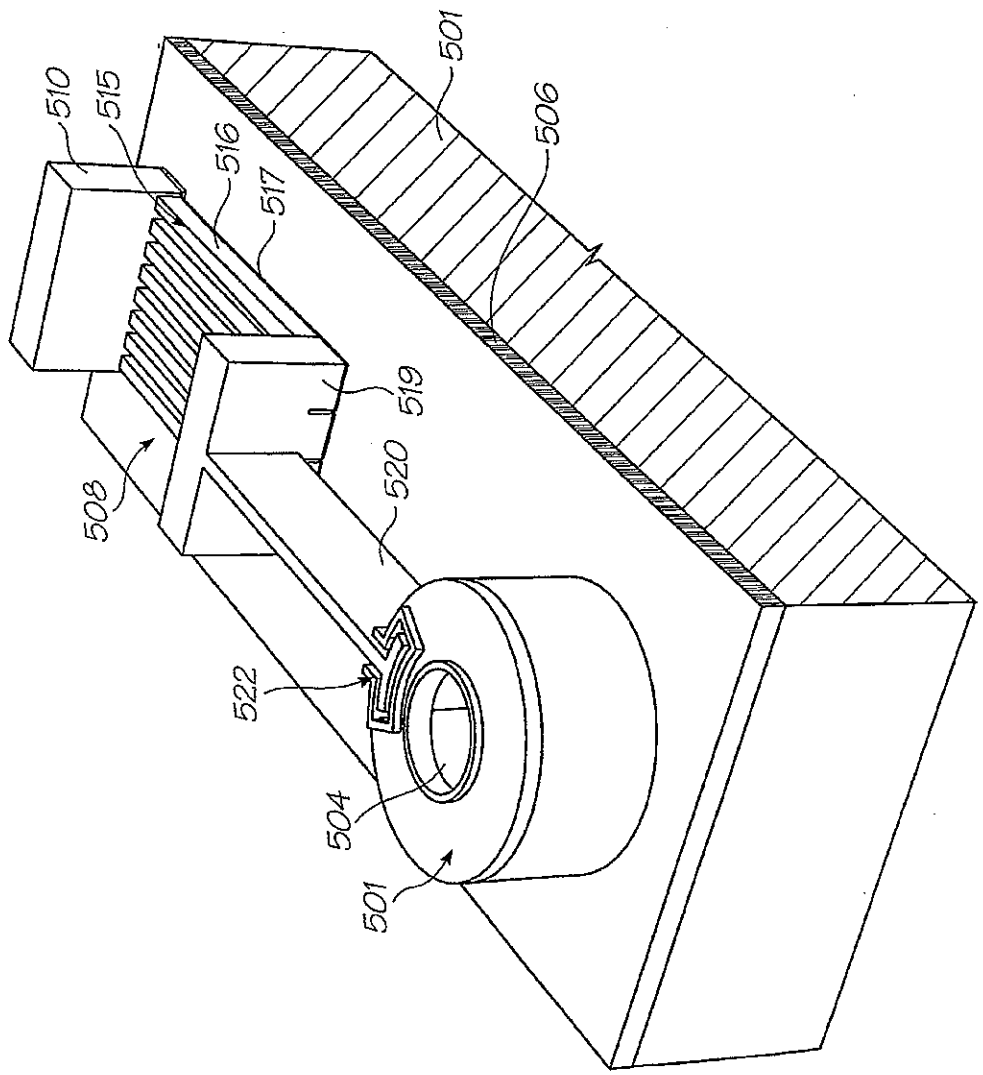

FIG. 23

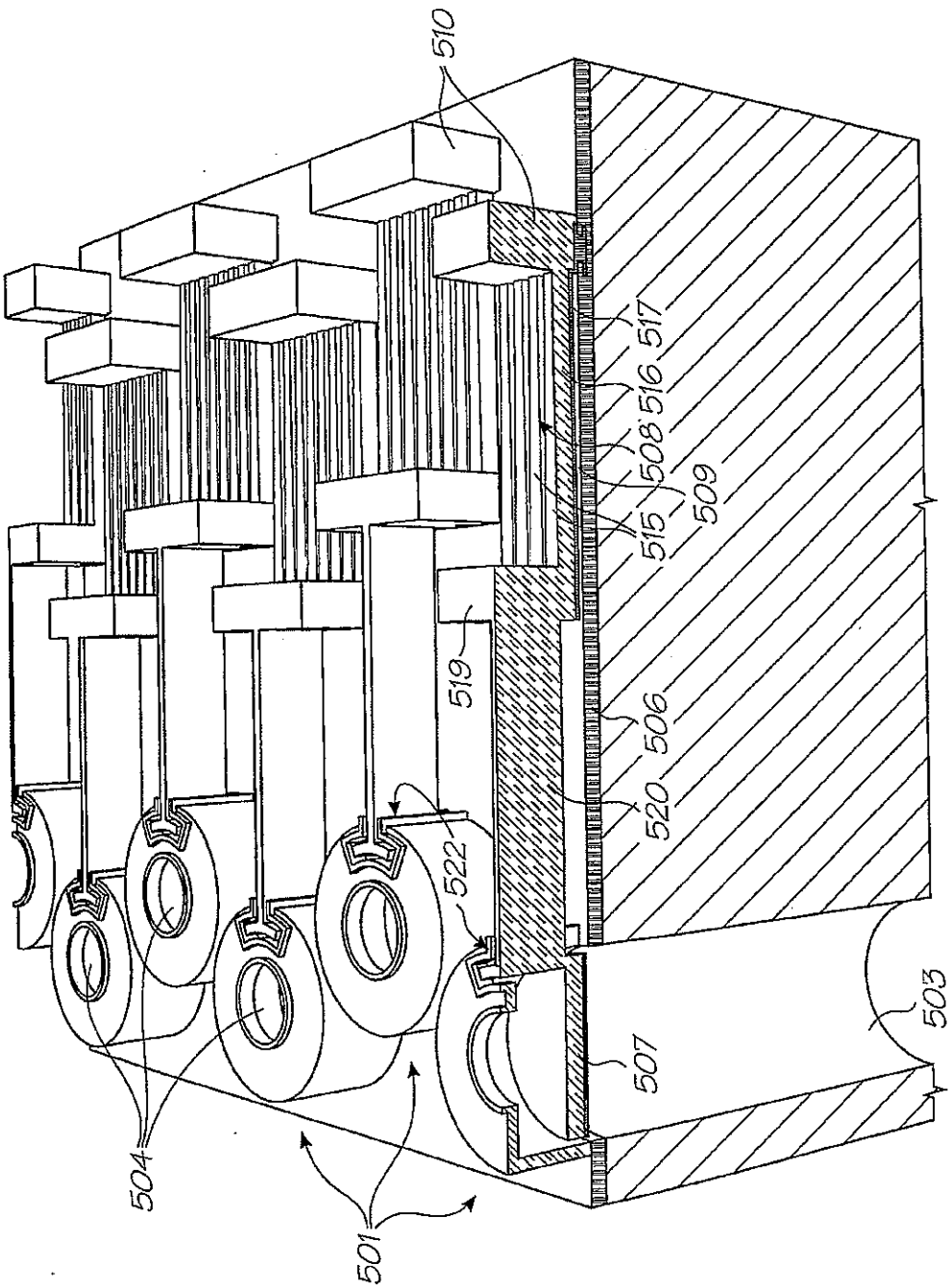

FIG. 24

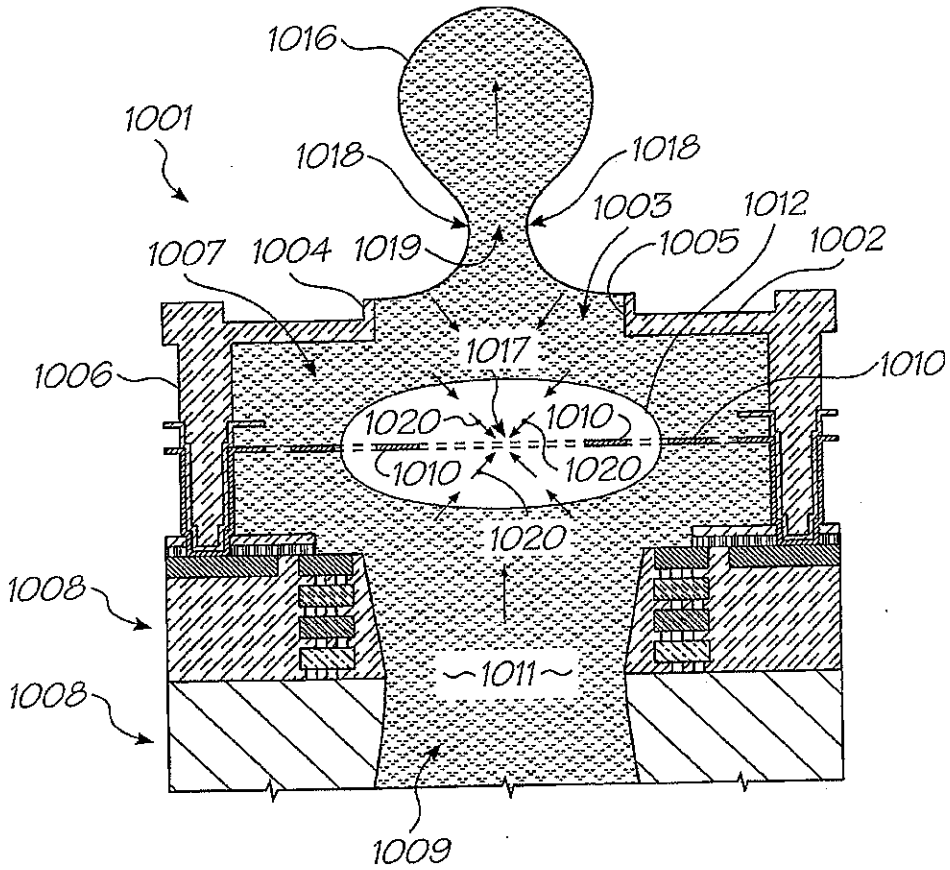
1016
1001
1018
1018
1003
1012
1007
1004
1019
1005
1002
1017
1006
1010
1020
1010
1010
1020
1020
1008
1011
1008
1009

FIG. 25