Fig. 1

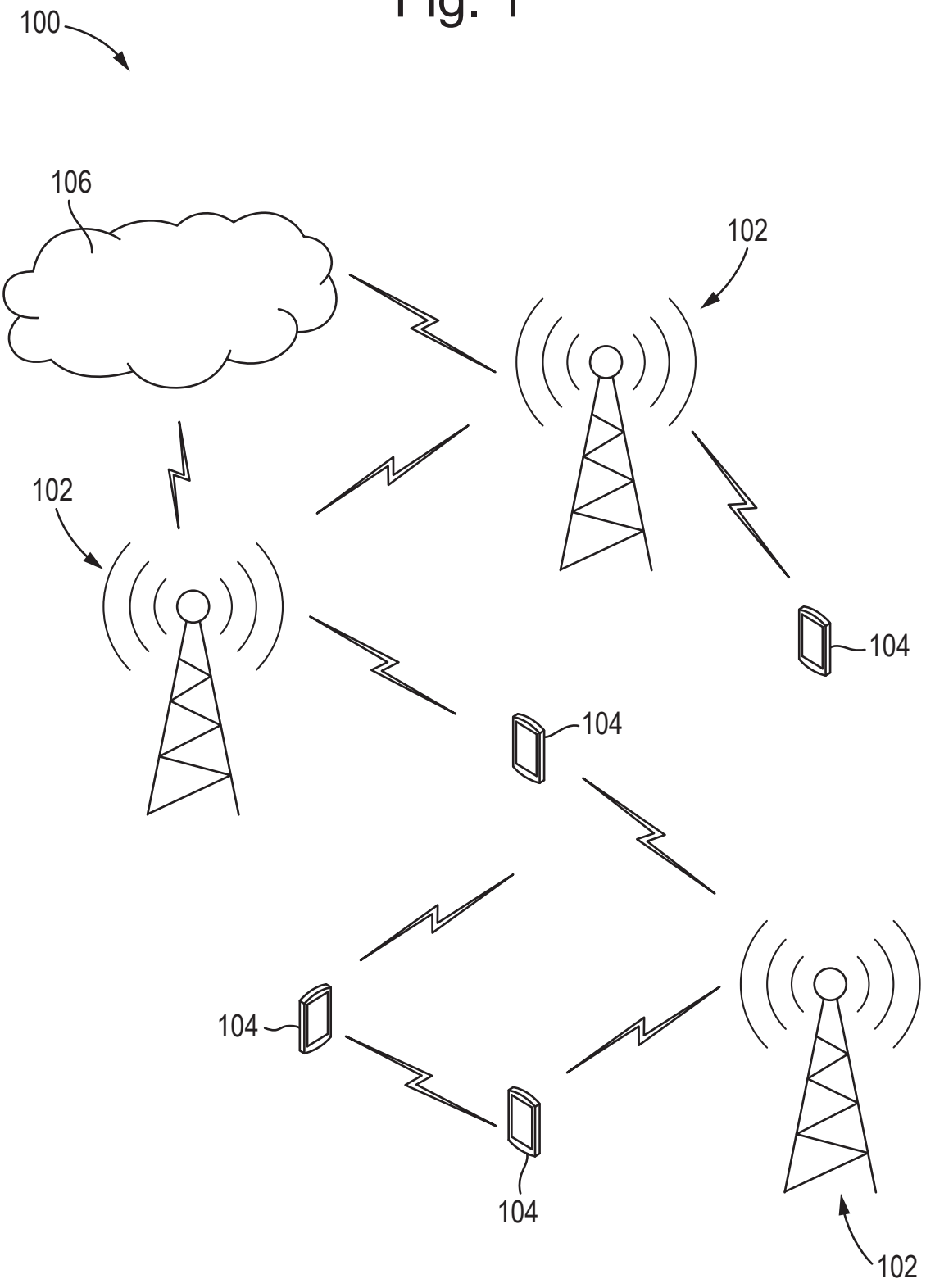

Fig. 2

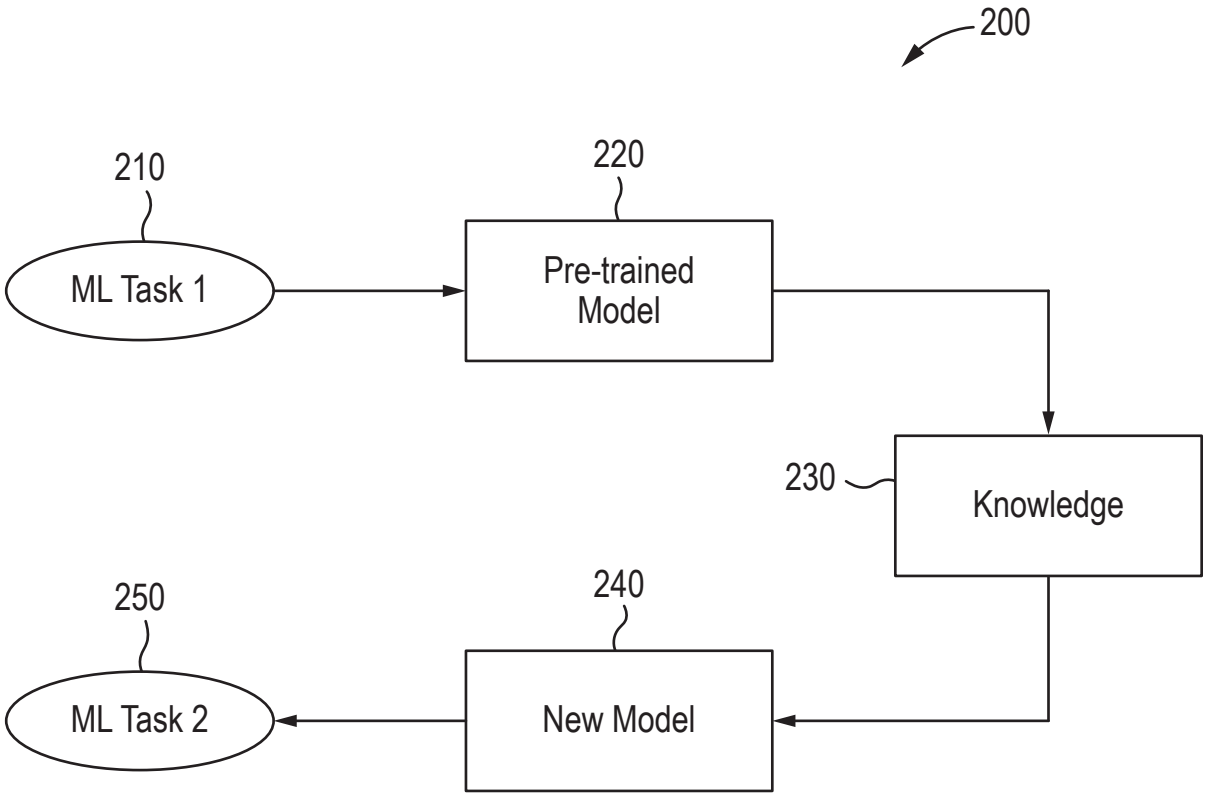
200
210
ML Task 1
220
Pre-trained Model
230
Knowledge
240
New Model
250
ML Task 2

Fig. 3

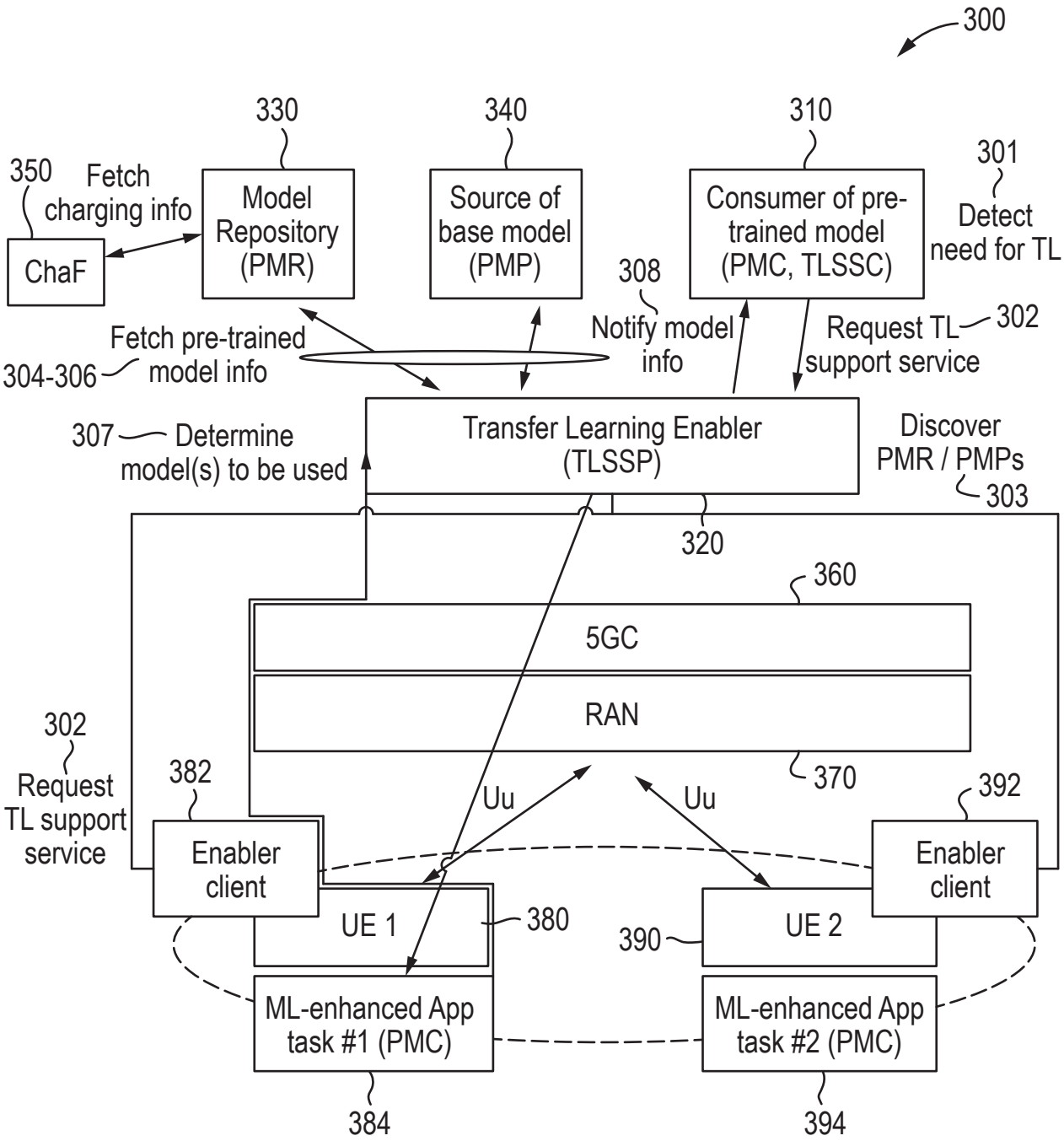
300
330
340
310
350
Fetch charging info
Model Repository (PMR)
Source of base model (PMP)
Consumer of pre-trained model (PMC, TLSSC)
301
Detect need for TL
ChaF
308
Notify model info
Request TL support service
302
Fetch pre-trained model info
304-306
307
Determine model(s) to be used
Transfer Learning Enabler (TLSSP)
Discover PMR / PMPs
303
320
360
5GC
RAN
370
302
Request TL support service
382
Uu
Uu
392
Enabler client
Enabler client
UE 1
380
390
UE 2
ML-enhanced App task #1 (PMC)
ML-enhanced App task #2 (PMC)
384
394

Fig. 4

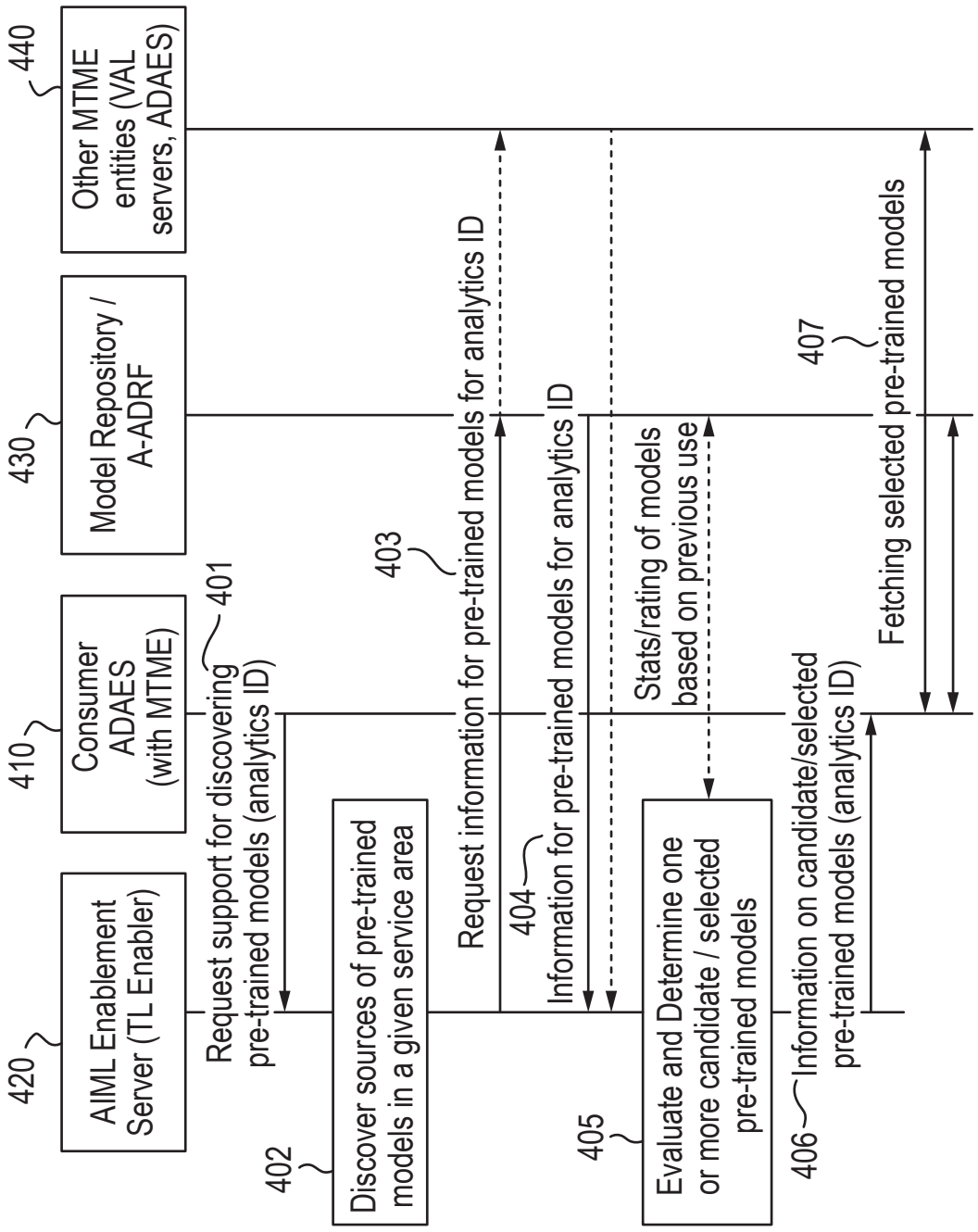
400
420
AIML Enablement Server (TL Enabler)
410
Consumer ADAES (with MTME)
430
Model Repository / A-ADRF
440
Other MTME entities (VAL servers, ADAES)
401
Request support for discovering pre-trained models (analytics ID)
402
Discover sources of pre-trained models in a given service area
403
Request information for pre-trained models for analytics ID
404
Information for pre-trained models for analytics ID
405
Evaluate and Determine one or more candidate / selected pre-trained models
406
Information on candidate/selected pre-trained models (analytics ID)
407
Stats/rating of models based on previous use
Fetching selected pre-trained models

Fig. 5

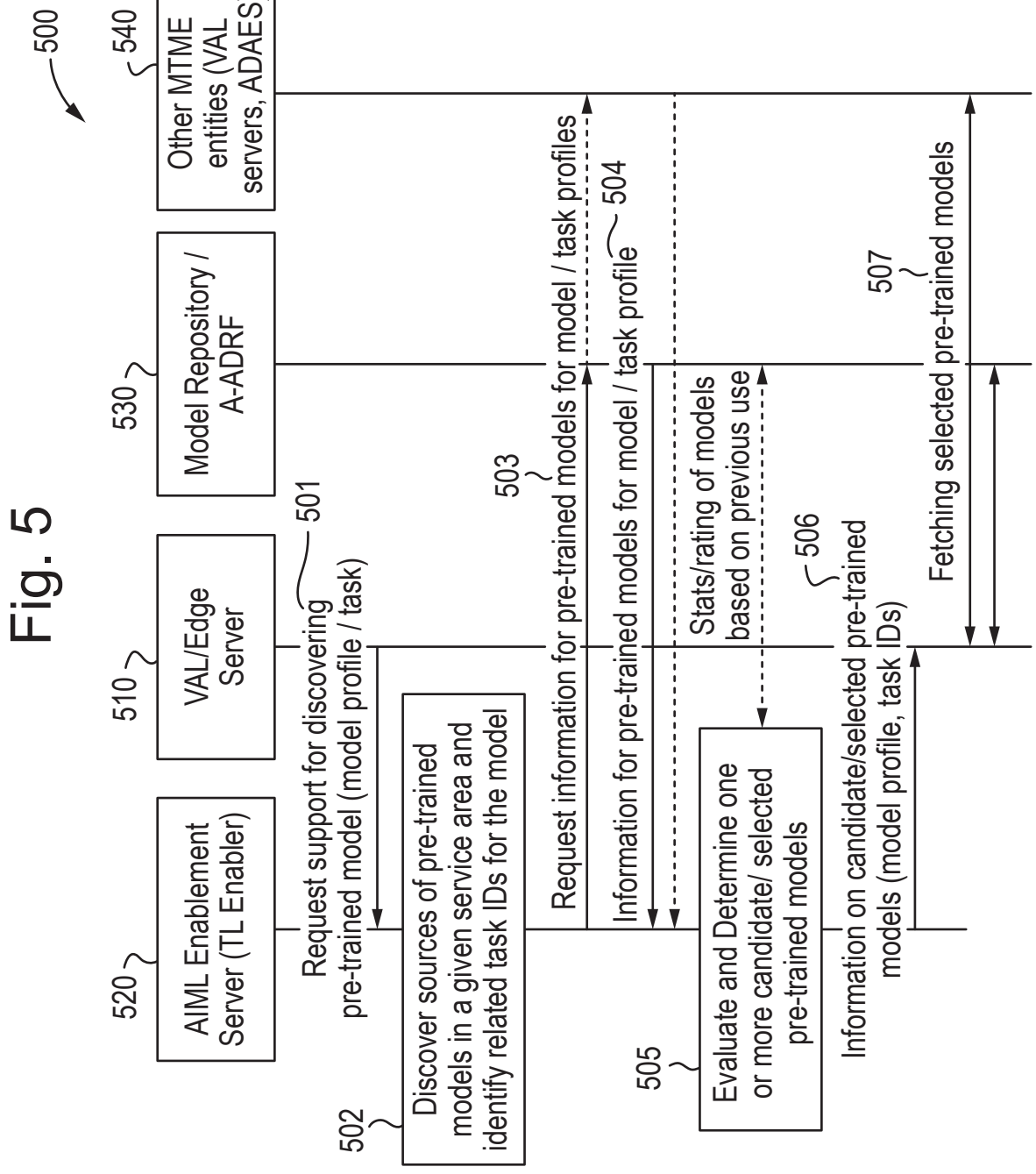
500
520
AIML Enablement Server (TL Enabler)
510
VAL/Edge Server
530
Model Repository / A-ADRF
540
Other MTME entities (VAL servers, ADAES)
501
Request support for discovering pre-trained model (model profile / task)
502
Discover sources of pre-trained models in a given service area and identify related task IDs for the model
503
Request information for pre-trained models for model / task profiles
504
Information for pre-trained models for model / task profile
505
Evaluate and Determine one or more candidate/ selected pre-trained models
506
Stats/rating of models based on previous use
Information on candidate/selected pre-trained models (model profile, task IDs)
507
Fetching selected pre-trained models

Fig. 6

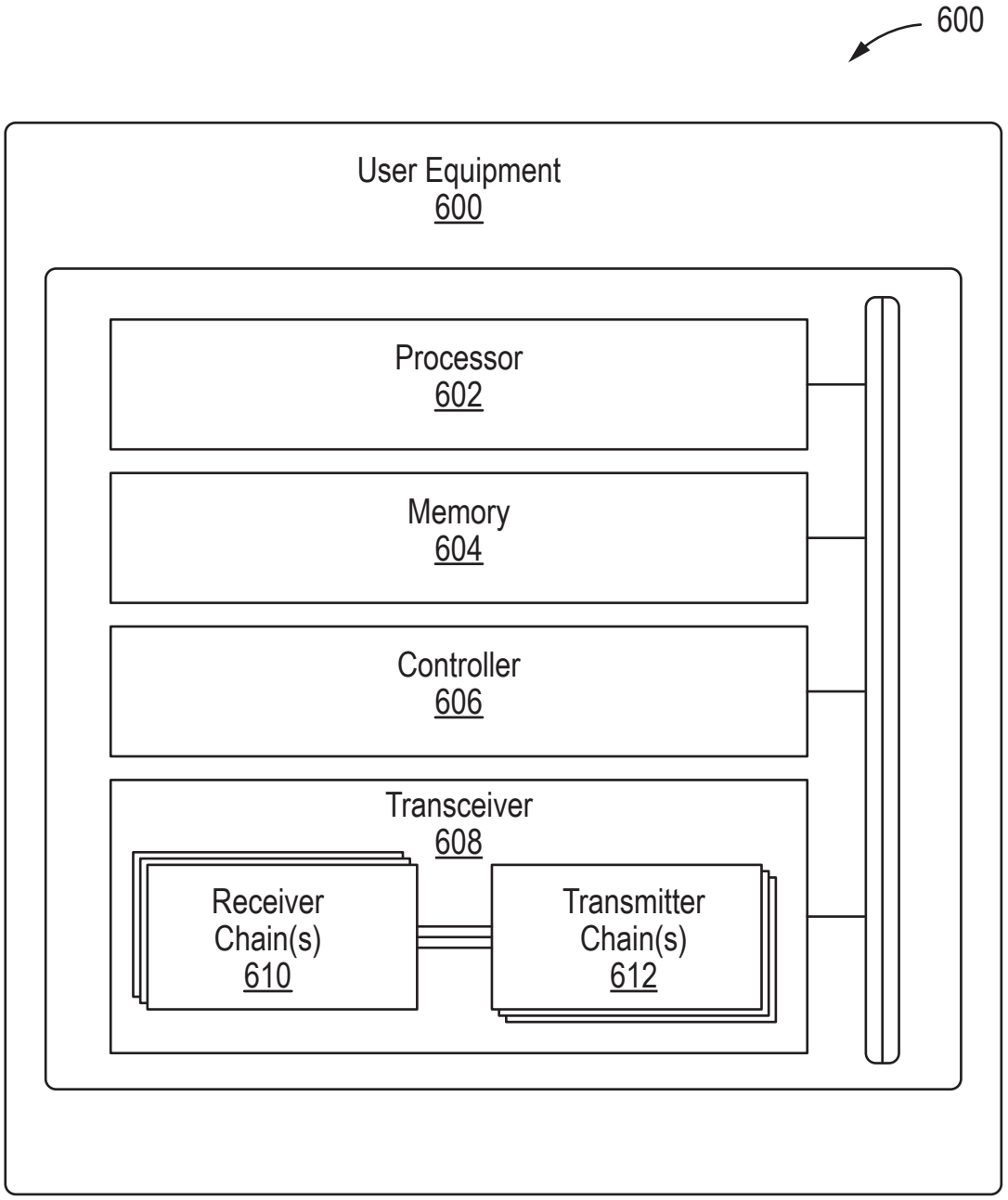
600
User Equipment
600
Processor
602
Memory
604
Controller
606
Transceiver
608
Receiver
Chain(s)
610
Transmitter
Chain(s)
612

Fig. 7

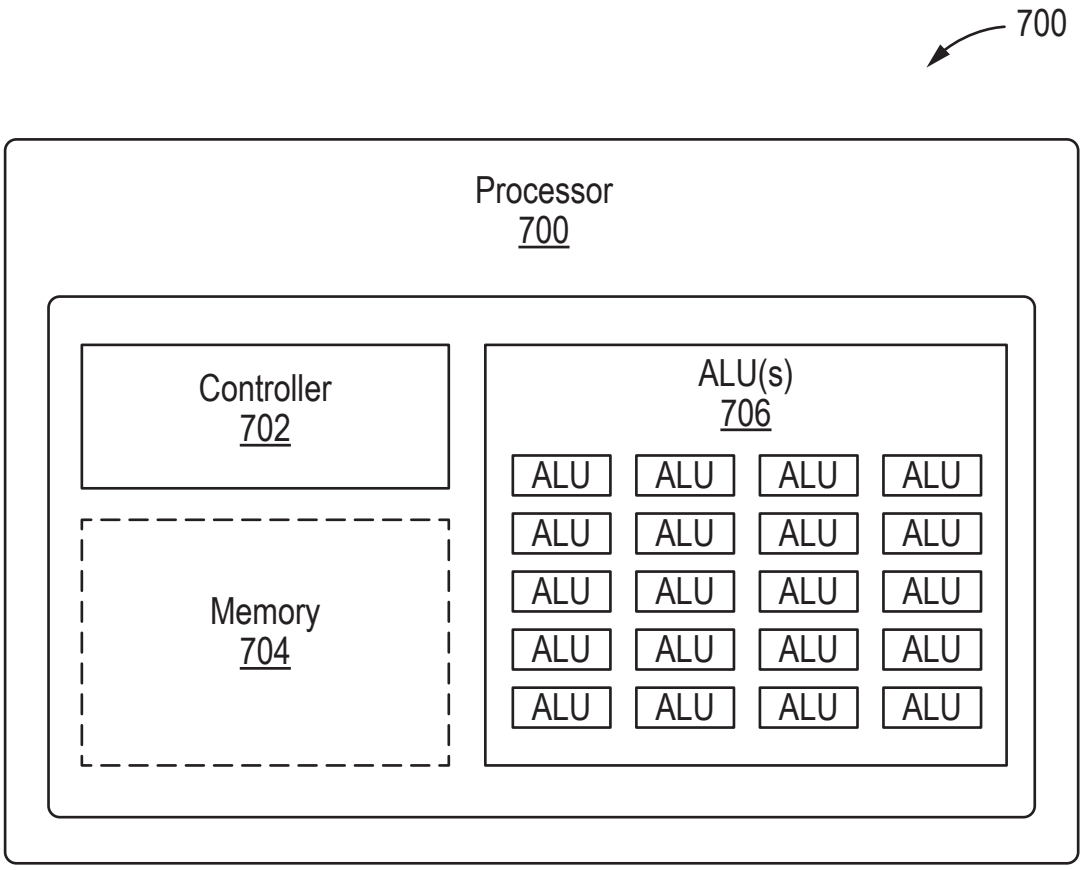
700
Processor
700
Controller
702
Memory
704
ALU(s)
706
ALU
ALU
ALU
ALU
ALU
ALU
ALU
ALU
ALU
ALU
ALU
ALU
ALU
ALU
ALU
ALU
ALU
ALU
ALU
ALU

Fig. 8

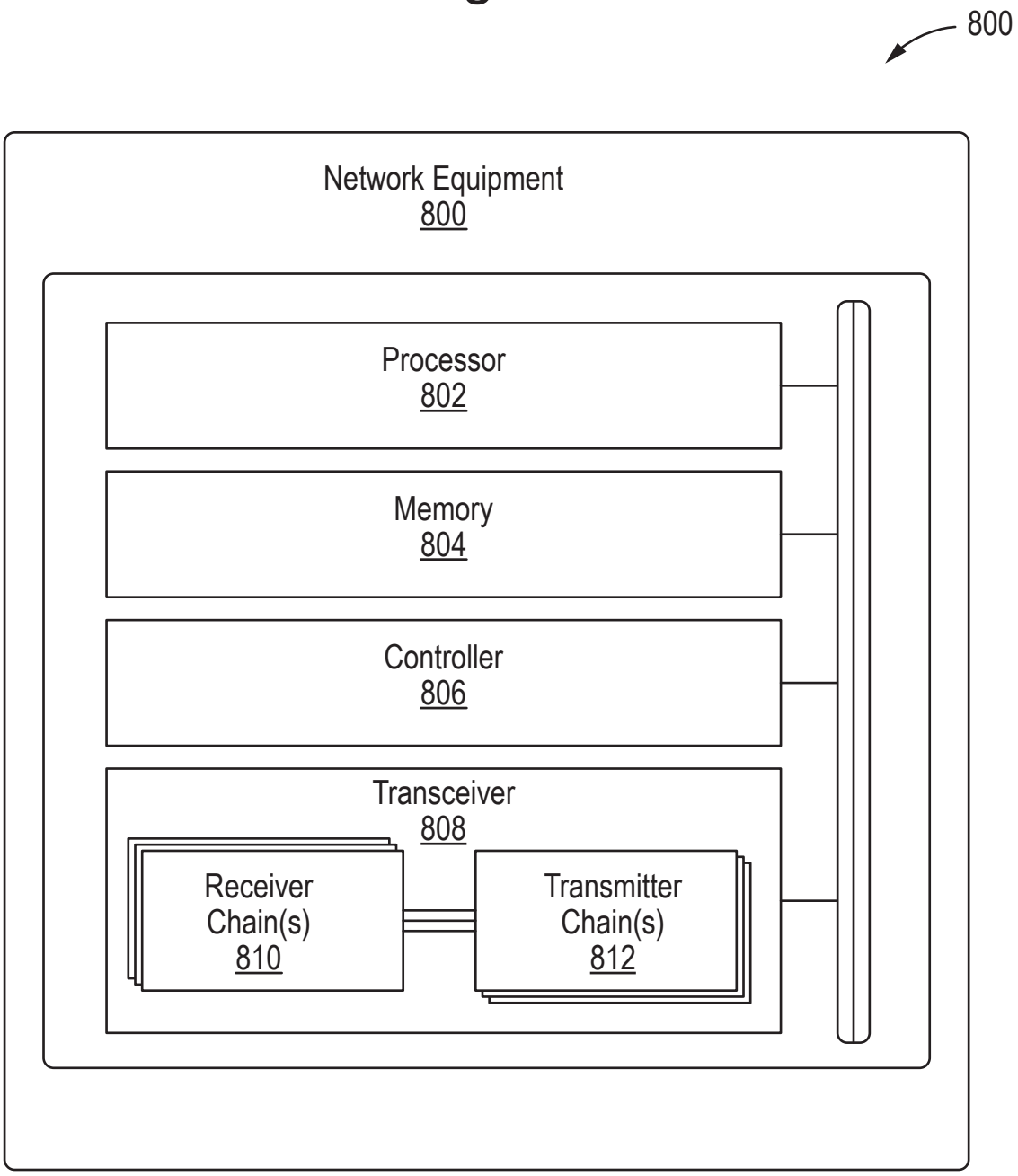
800
Network Equipment
800
Processor
802
Memory
804
Controller
806
Transceiver
808
Receiver
Chain(s)
810
Transmitter
Chain(s)
812

Fig. 9

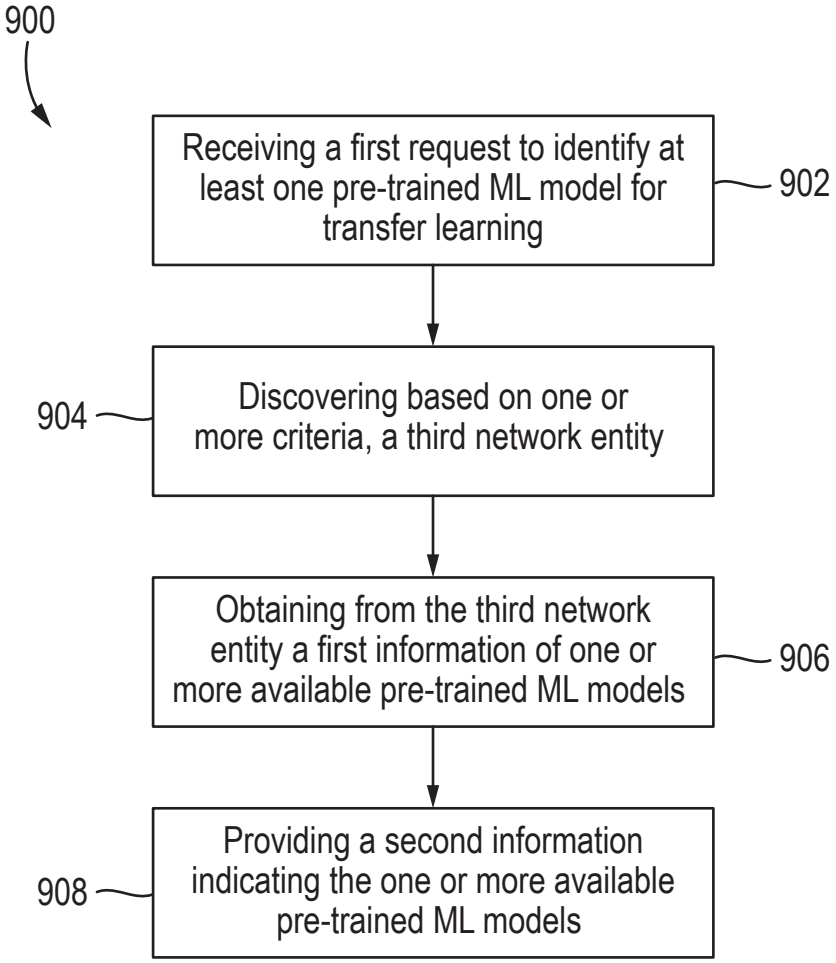
900
Receiving a first request to identify at least one pre-trained ML model for transfer learning
902
Discovering based on one or more criteria, a third network entity
904
Obtaining from the third network entity a first information of one or more available pre-trained ML models
906
Providing a second information indicating the one or more available pre-trained ML models
908

Fig. 10

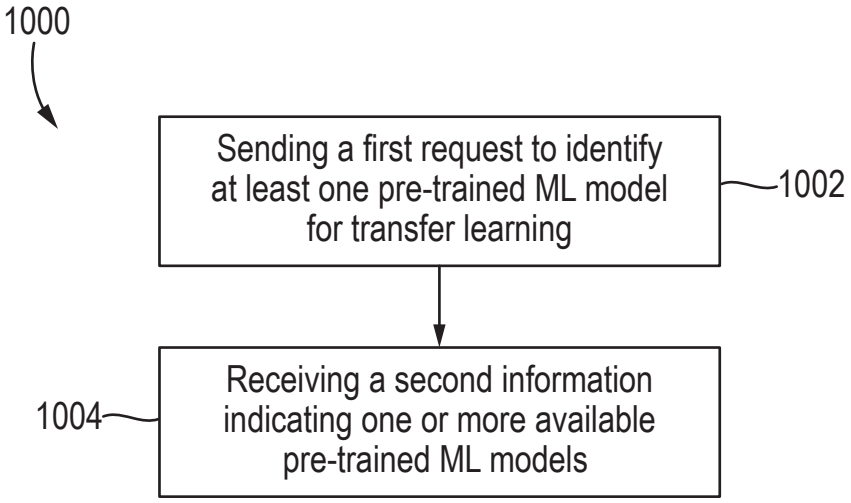
1000
Sending a first request to identify at least one pre-trained ML model for transfer learning
1002
Receiving a second information indicating one or more available pre-trained ML models
1004

Fig. 11

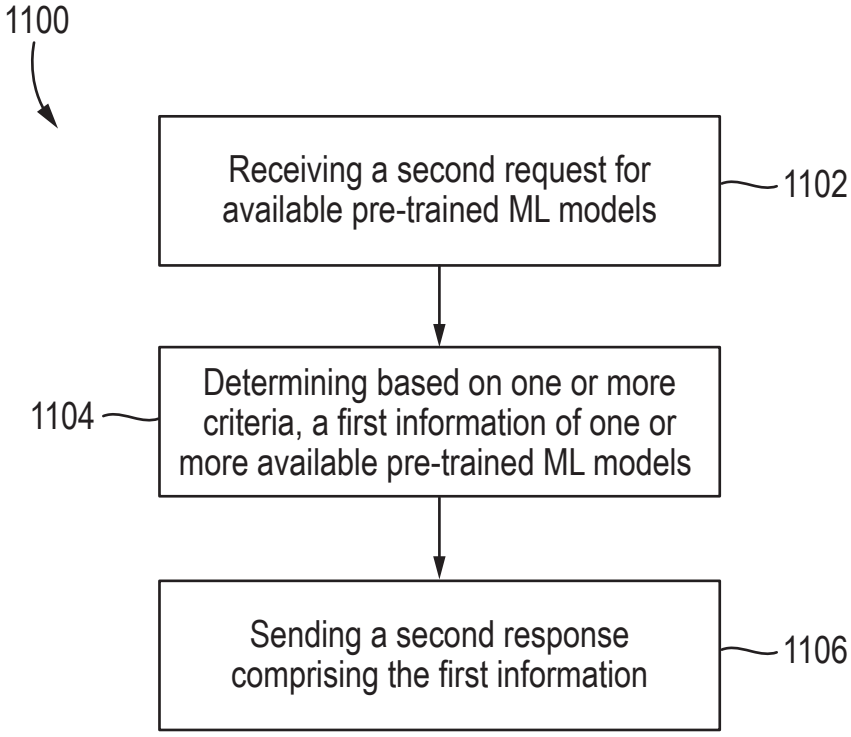
1100
Receiving a second request for available pre-trained ML models
1102
Determining based on one or more criteria, a first information of one or more available pre-trained ML models
1104
Sending a second response comprising the first information
1106