SG 9700879-1

RTMP COPY

PCT WORLD INTELLECTUAL PROPERTY ORGANIZATION
International Bureau

INTERNATIONAL APPLICATION PUBLISHED UNDER THE PATENT COOPERATION TREATY (PCT)

(51) International Patent Classification 6 : B63B 25/08 — A1

(11) International Publication Number: WO 96/06002

(43) International Publication Date: 29 February 1996 (29.02.96)

(21) International Application Number: PCT/CA95/00478

(22) International Filing Date: 11 August 1995 (11.08.95)

(30) Priority Data:
2,130,890 25 August 1994 (25.08.94) CA

(71)(72) Applicant and Inventor: LOGAN, Ronald [CA/CA]; Apartment #7, 270 Parkside Drive, Fredericton, New Brunswick E3B 5V7 (CA).

(74) Agent: SHEARN, G., James, M.; Scotia Plaza, Suite 4300, 40 King Street West, Toronto, Ontario M5H 3Y4 (CA).

(81) Designated States: AM, AT, AU, BB, BG, BR, BY, CH, CN, CZ, DE, DK, EE, ES, FI, GB, GE, HU, IS, JP, KE, KG, KP, KR, KZ, LK, LR, LT, LU, LV, MD, MG, MN, MW, MX, NO, NZ, PL, PT, RO, RU, SD, SE, SG SI, SK, TJ, TM, TT, UA, UG, US, UZ, VN, European patent (AT, BE, CH, DE, DK, ES, FR, GB, GR, IE, IT, LU, MC, NL, PT, SE), OAPI patent (BF, BJ, CF, CG, CI, CM, GA, GN, ML, MR, NE, SN, TD, TG), ARIPO patent (KE, MW, SD, SZ, UG).

Published
With international search report.

① = R + PCT
② = PER & Annexes
③ Amendment dd 17.2.98

(54) Title: SPILL CONTAINMENT SYSTEM

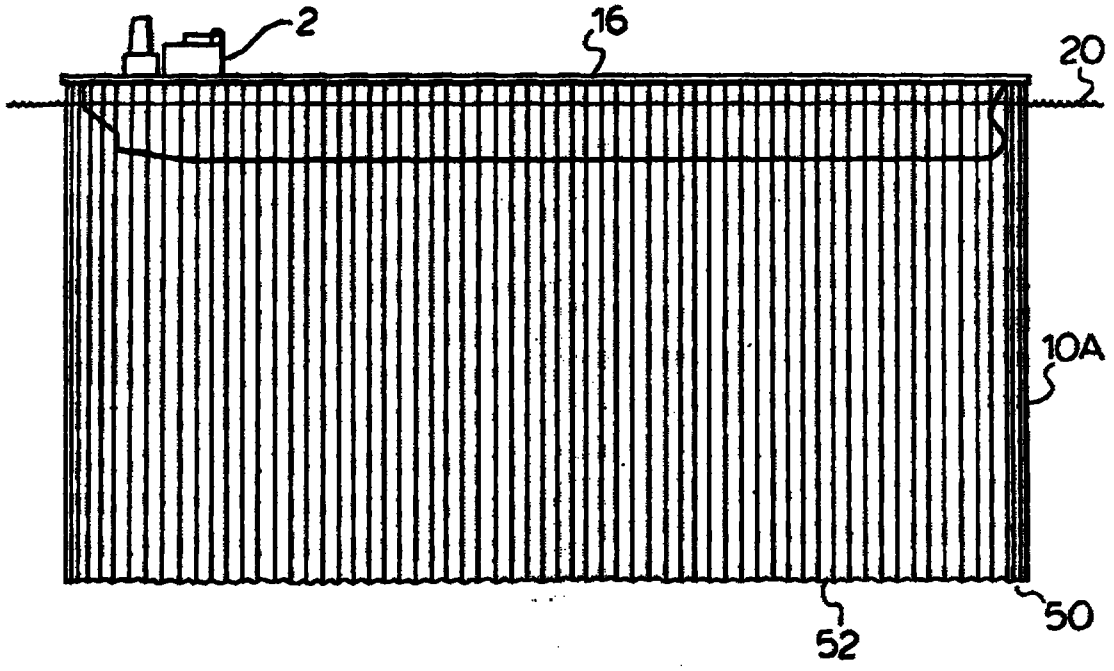

(57) Abstract

A spill containment system for vessels comprises a curtain (10a) capable of extending continuously around the entire vessel (2) and having a vertical dimension sufficient to extend from a height above the waterline to a depth below the waterline. The curtain is stored in canisters (16) on or beneath the deck inboard from the hull or rail but capable of being deployed by articulated arms to a position outboard of the ship where the curtain (10a) can be deployed into the water to maintain and control a spill from the vessel.