FIG. 1

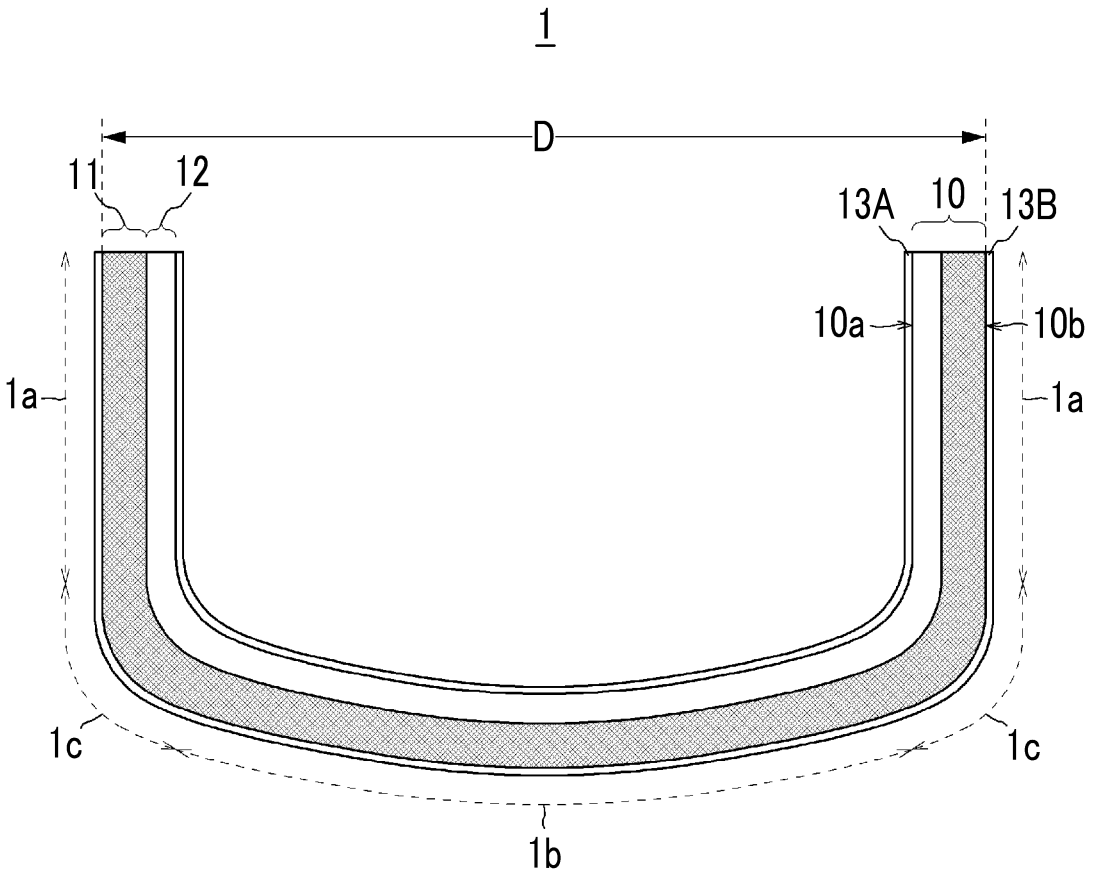
1
D
11
12
13A
10
13B
10a
10b
1a
1a
1c
1c
1b

FIG. 2

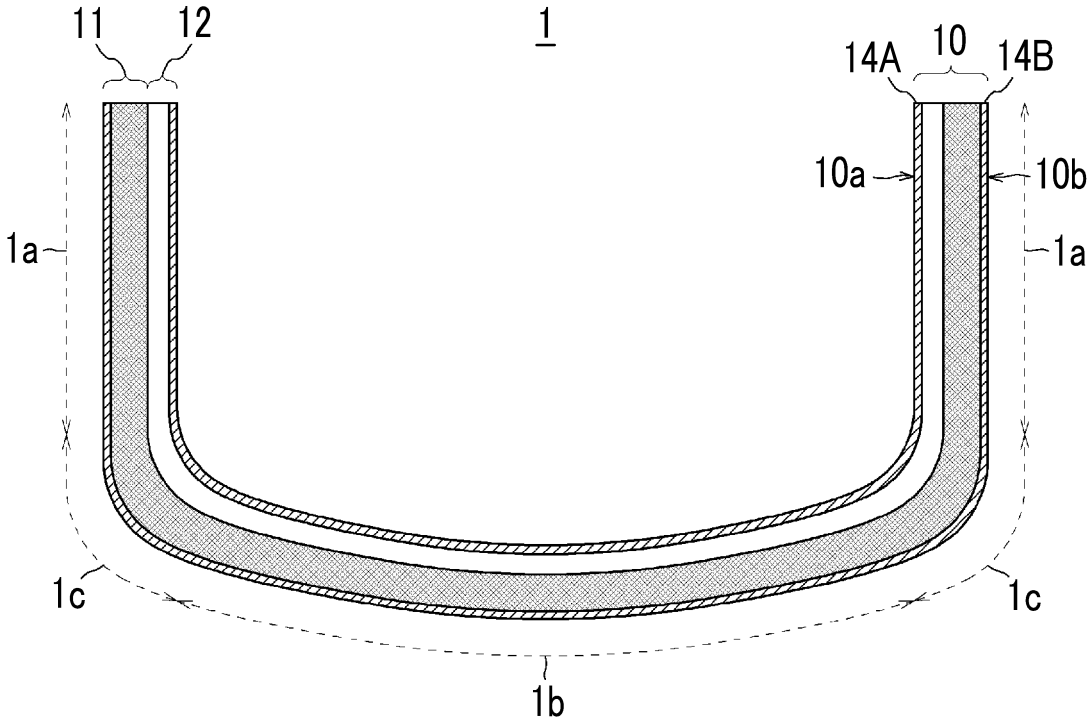
11
12
1
14A
10
14B
10a
10b
1a
1a
1c
1c
1b

FIG. 3

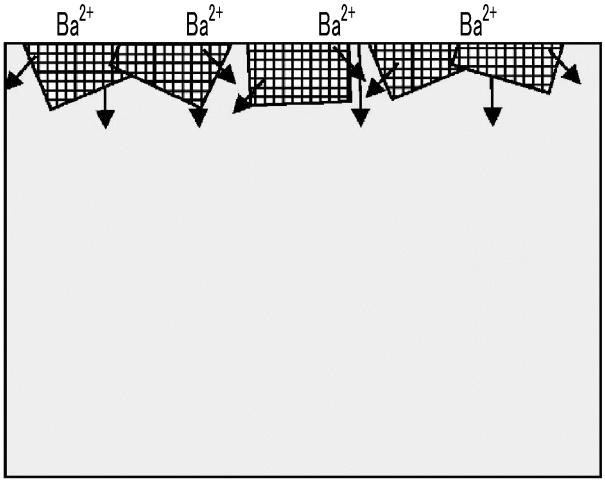
Ba2+
Ba2+
Ba2+
Ba2+

(a)

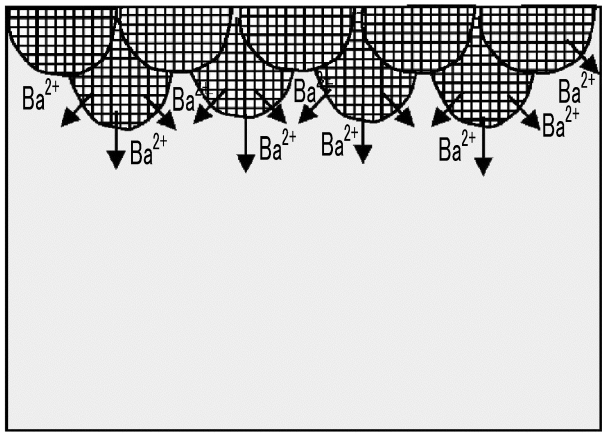
Ba2+
Ba2+
Ba2+
Ba2+
Ba2+
Ba2+
Ba2+
Ba2+
Ba2+

(b)

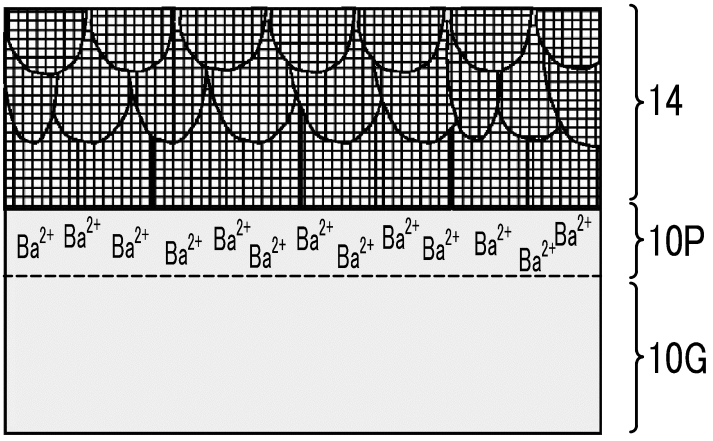
14
10P
10G
Ba2+

(c)

FIG. 4

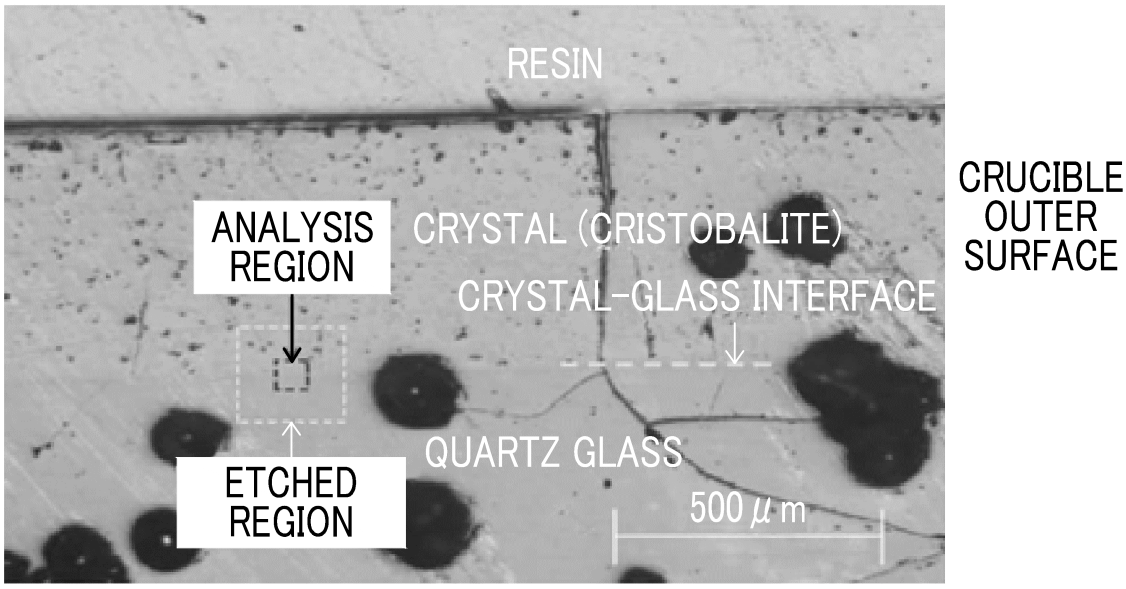
RESIN
ANALYSIS REGION
CRYSTAL (CRISTOBALITE)
CRYSTAL-GLASS INTERFACE
CRUCIBLE OUTER SURFACE
ETCHED REGION
QUARTZ GLASS
500 μm

(a)

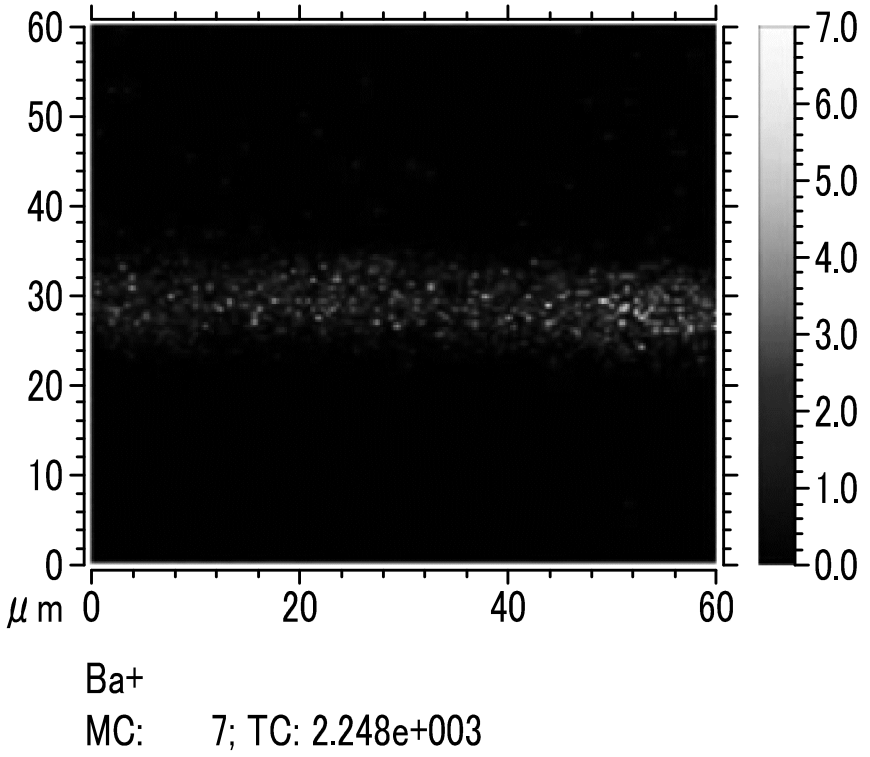
60
50
40
30
20
10
0
μm 0
20
40
60
7.0
6.0
5.0
4.0
3.0
2.0
1.0
0.0
Ba+
MC: 7; TC: 2.248e+003

(b)

FIG. 5

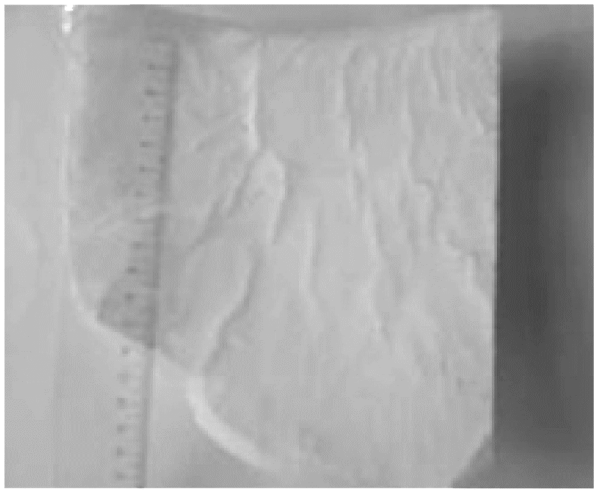

(a)

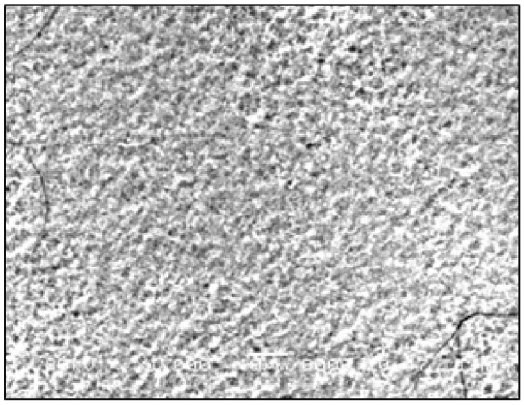

(b)

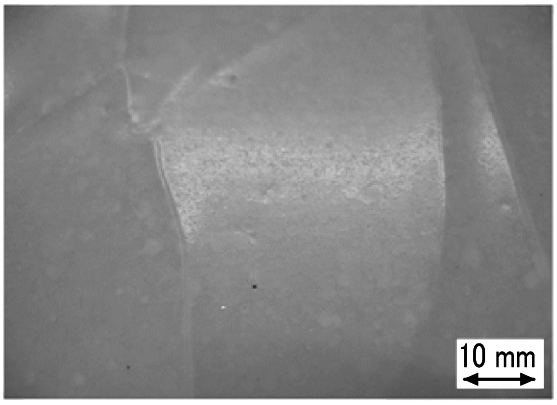

(c)

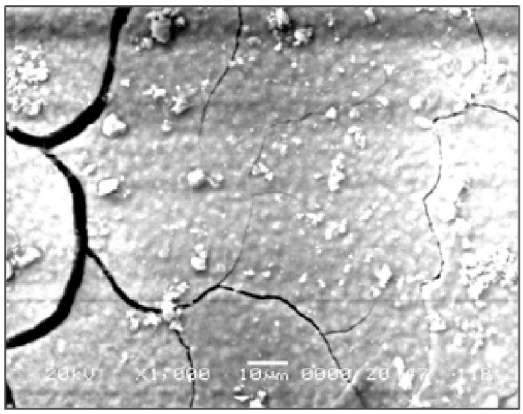

(d)

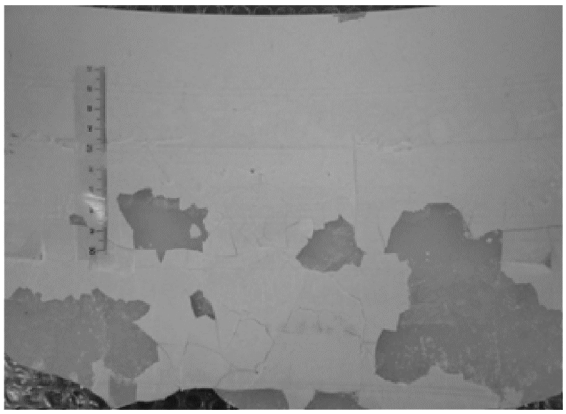

(e)

FIG. 6

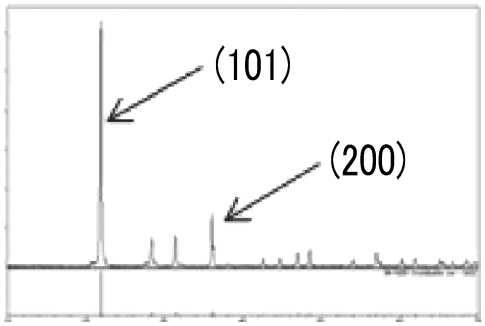

RANDOM GROWTH

(a)

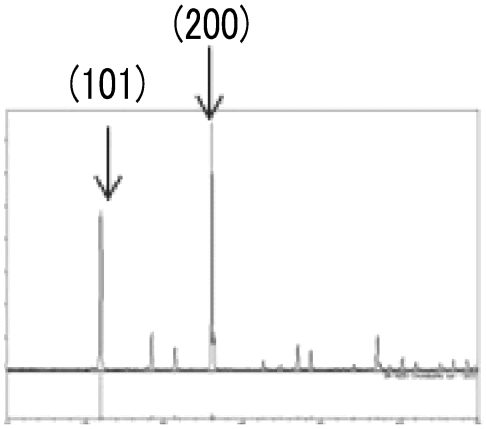

GROWTH IN
DOME-SHAPED ORIENTATION

(b)

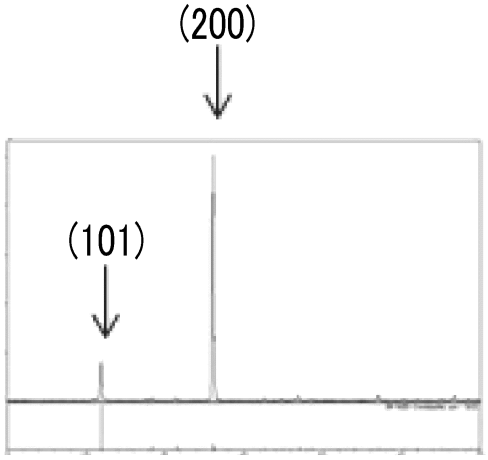

GROWTH IN
COLUMNAR ORIENTATION

(c)

FIG. 7

CRYSTAL STRUCTURE	CRUCIBLE					
	INNER SURFACE			OUTER SURFACE		
	W PORTION	R PORTION	B PORTION	W PORTION	R PORTION	B PORTION
RANDOM (7.0 OR MORE)	C	C	C	C	C	C
DOME-SHAPED (0.4 OR MORE AND LESS THAN 7.0)	A	B	B	A	A	A
COLUMNAR (LESS THAN 0.4)		A	A	B	B	B

FIG. 8

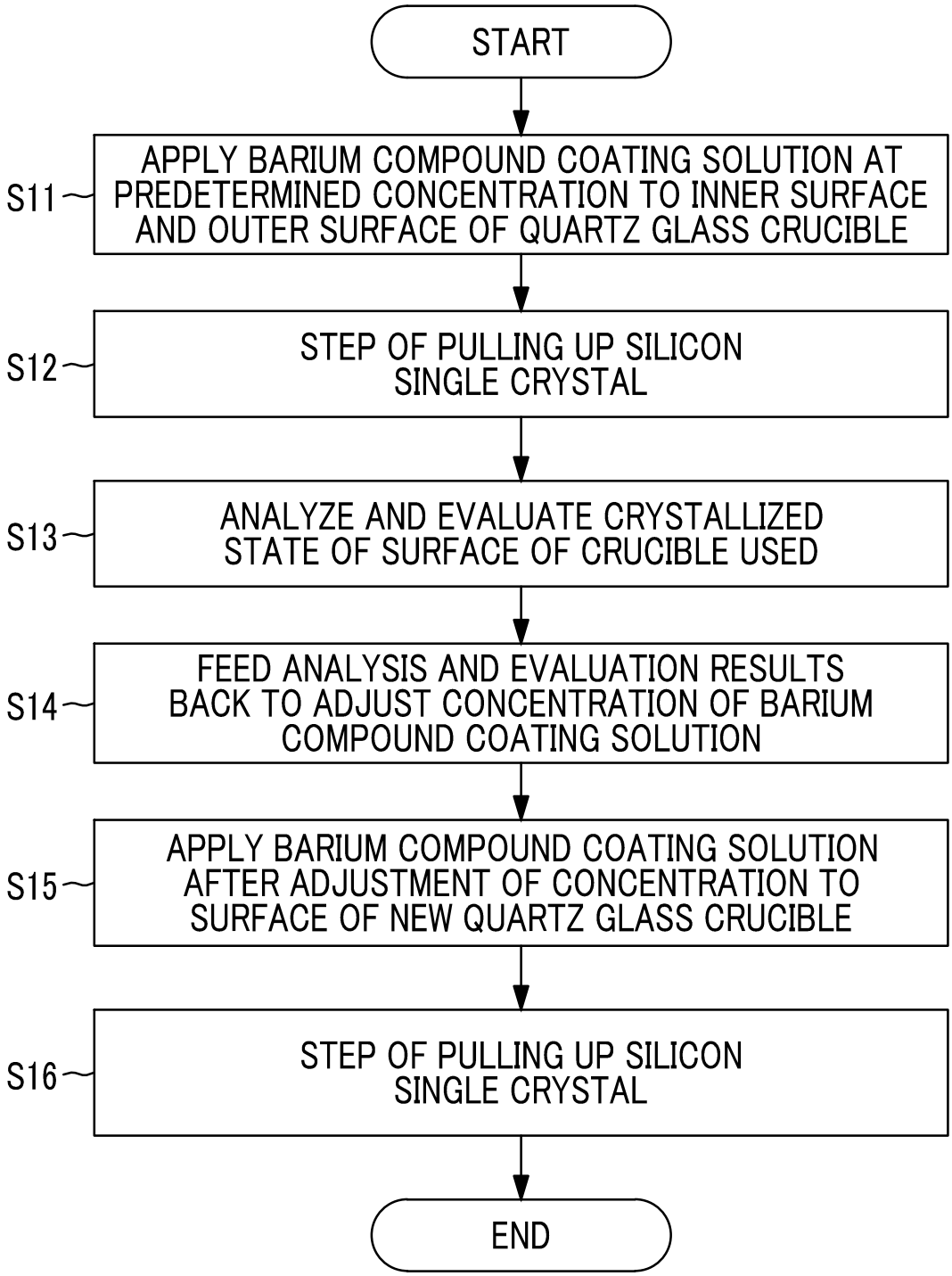
START
S11
APPLY BARIUM COMPOUND COATING SOLUTION AT PREDETERMINED CONCENTRATION TO INNER SURFACE AND OUTER SURFACE OF QUARTZ GLASS CRUCIBLE
S12
STEP OF PULLING UP SILICON SINGLE CRYSTAL
S13
ANALYZE AND EVALUATE CRYSTALLIZED STATE OF SURFACE OF CRUCIBLE USED
S14
FEED ANALYSIS AND EVALUATION RESULTS BACK TO ADJUST CONCENTRATION OF BARIUM COMPOUND COATING SOLUTION
S15
APPLY BARIUM COMPOUND COATING SOLUTION AFTER ADJUSTMENT OF CONCENTRATION TO SURFACE OF NEW QUARTZ GLASS CRUCIBLE
S16
STEP OF PULLING UP SILICON SINGLE CRYSTAL
END

FIG. 9

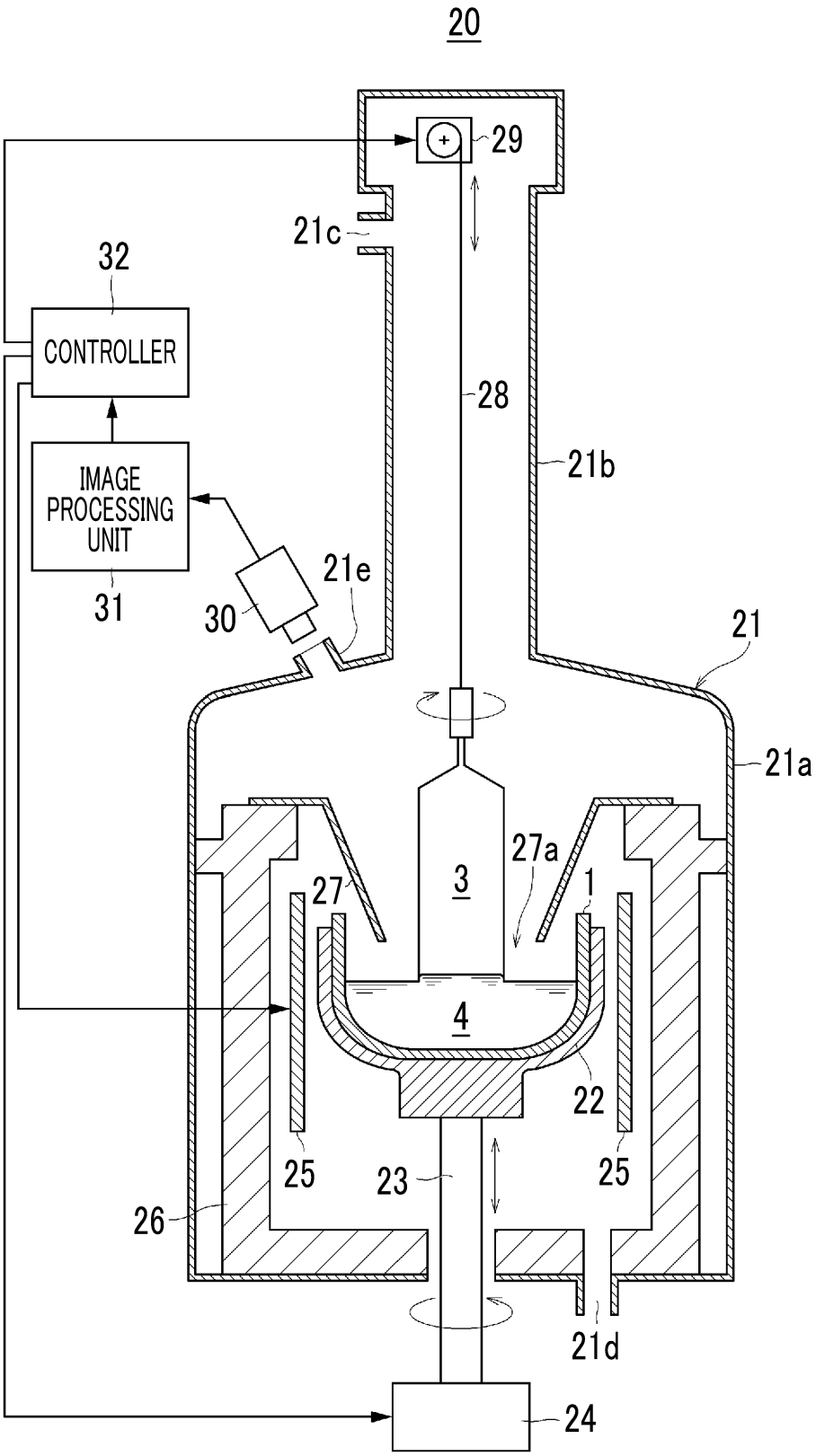
20
29
21c
32
CONTROLLER
28
21b
IMAGE PROCESSING UNIT
31
30
21e
21
21a
27a
3
27
1
4
22
25
23
25
26
21d
24

FIG. 10

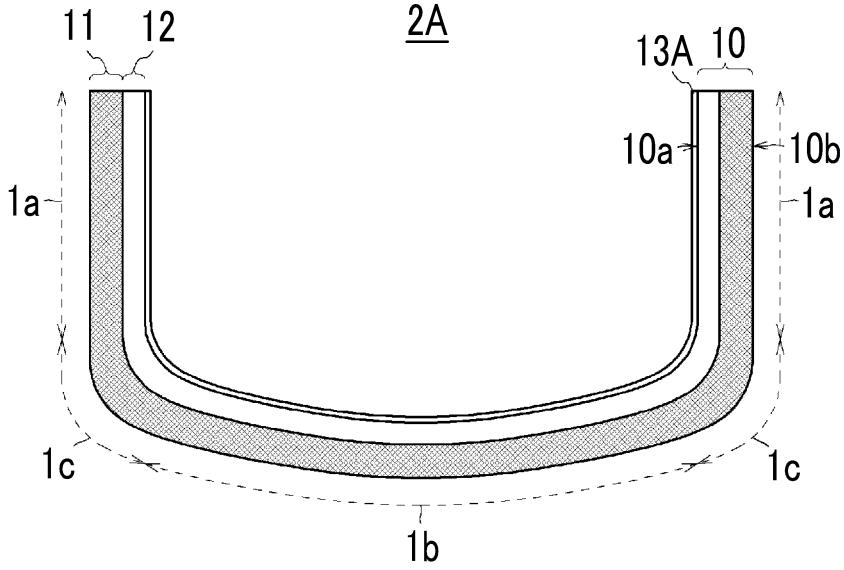
11
12
2A
13A
10
10a
10b
1a
1a
1c
1c
1b

(a)

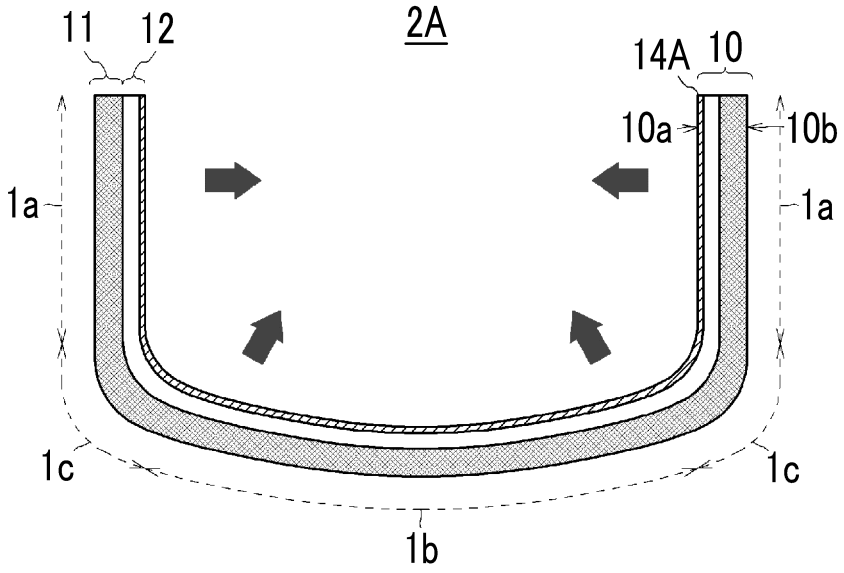
11
12
2A
14A
10
10a
10b
1a
1a
1c
1c
1b

(b)

FIG. 11

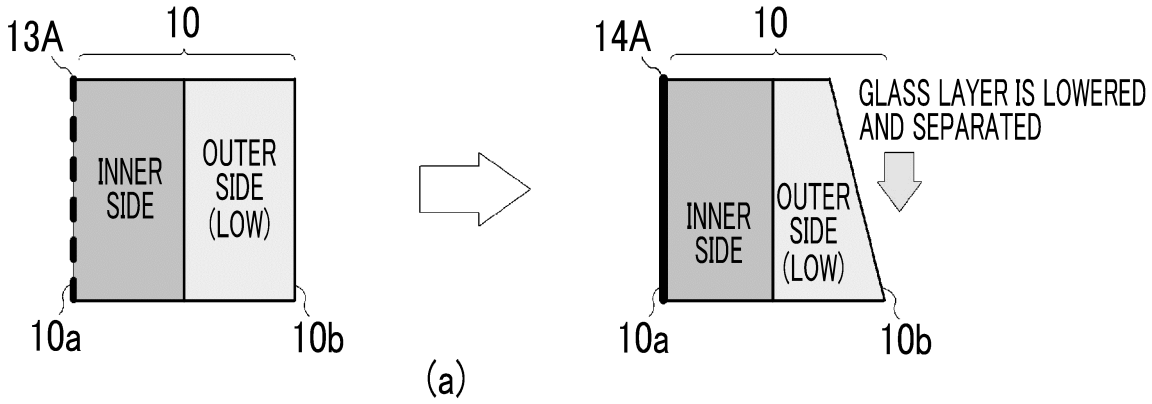
13A
10
INNER SIDE
OUTER SIDE (LOW)
10a
10b
14A
10
GLASS LAYER IS LOWERED AND SEPARATED
INNER SIDE
OUTER SIDE (LOW)
10a
10b

(a)

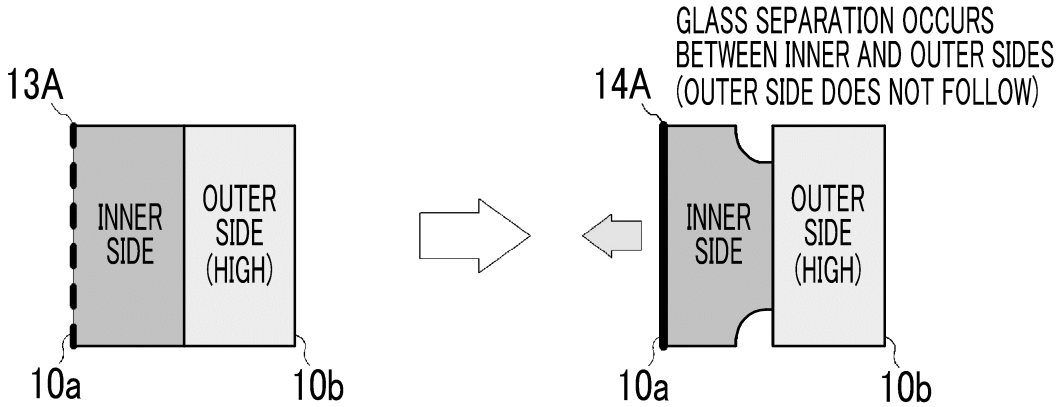
13A
INNER SIDE
OUTER SIDE (HIGH)
10a
10b
14A
GLASS SEPARATION OCCURS BETWEEN INNER AND OUTER SIDES (OUTER SIDE DOES NOT FOLLOW)
INNER SIDE
OUTER SIDE (HIGH)
10a
10b

(b)

FIG. 12

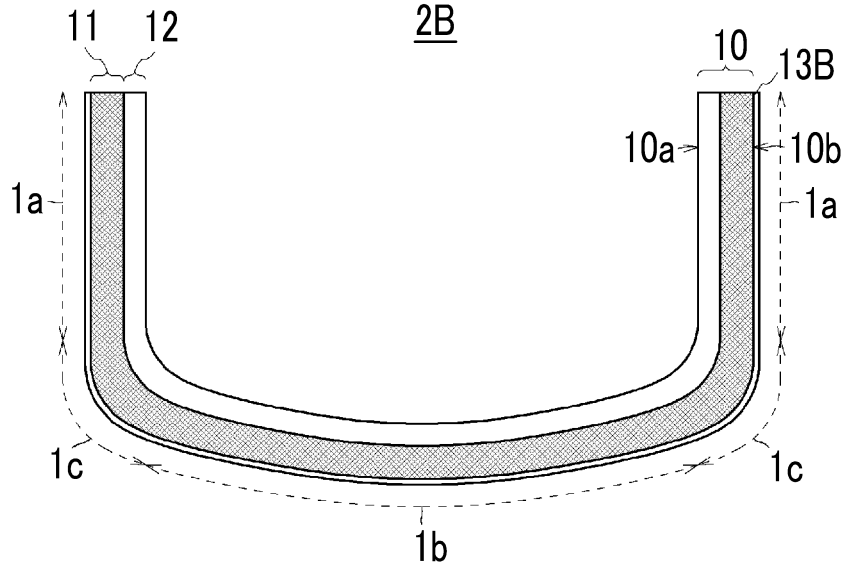
2B
11
12
10
13B
10a
10b
1a
1a
1c
1c
1b

(a)

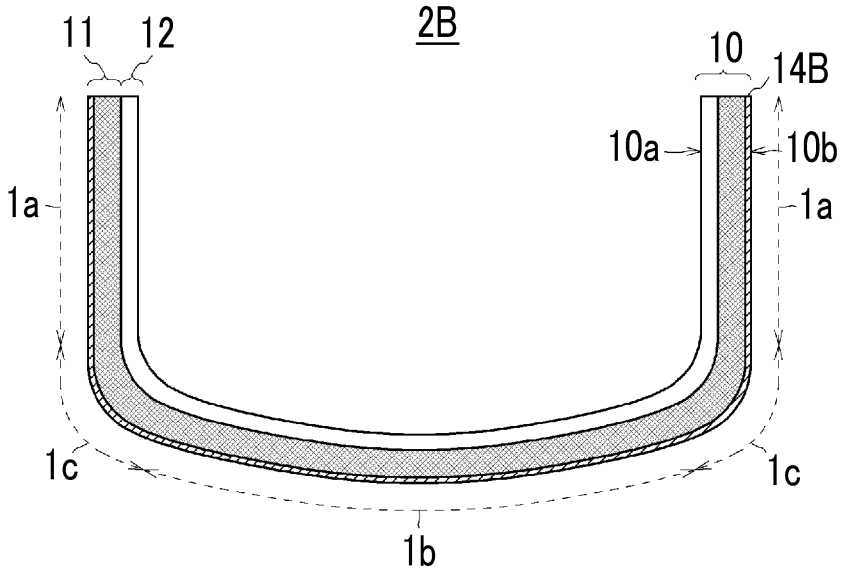
2B
11
12
10
14B
10a
10b
1a
1a
1c
1c
1b

(b)

FIG. 13

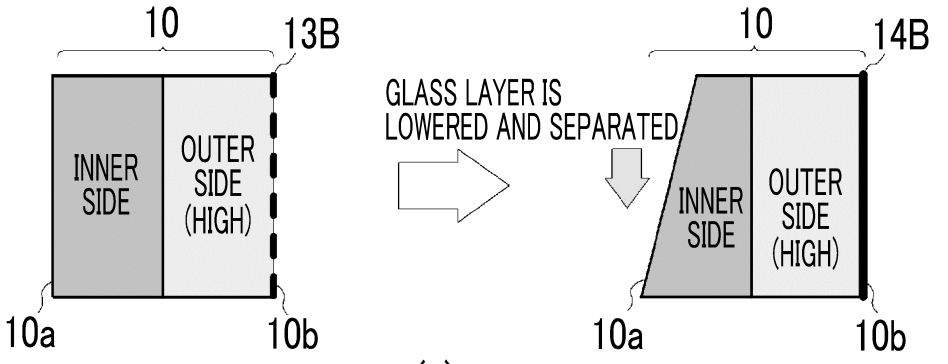
10
13B
INNER SIDE
OUTER SIDE (HIGH)
10a
10b
GLASS LAYER IS LOWERED AND SEPARATED
10
14B
INNER SIDE
OUTER SIDE (HIGH)
10a
10b

(a)

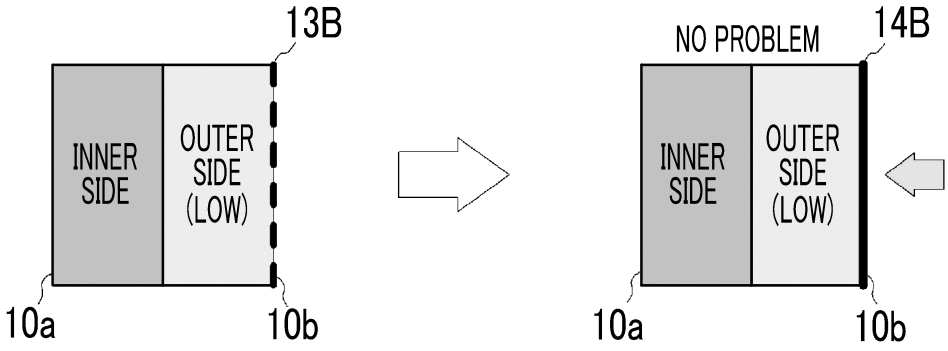
13B
INNER SIDE
OUTER SIDE (LOW)
10a
10b
NO PROBLEM
14B
INNER SIDE
OUTER SIDE (LOW)
10a
10b

(b)

FIG. 14

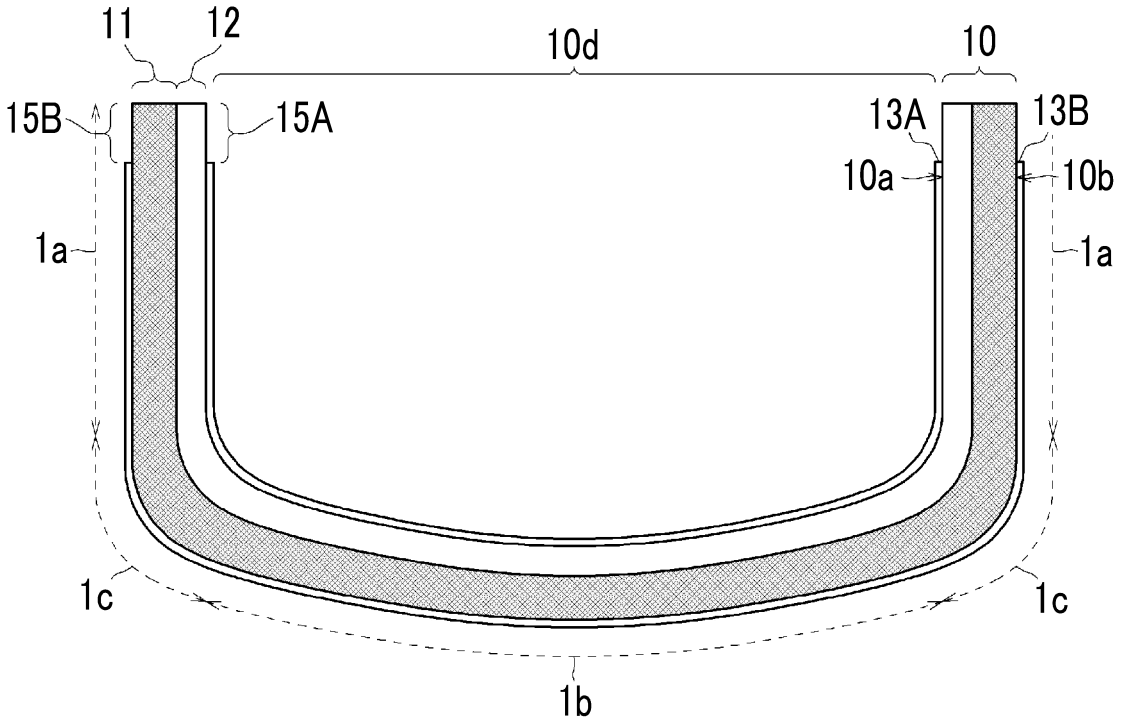
5
11
12
10d
10
15B
15A
13A
13B
10a
10b
1a
1a
1c
1c
1b

FIG. 15

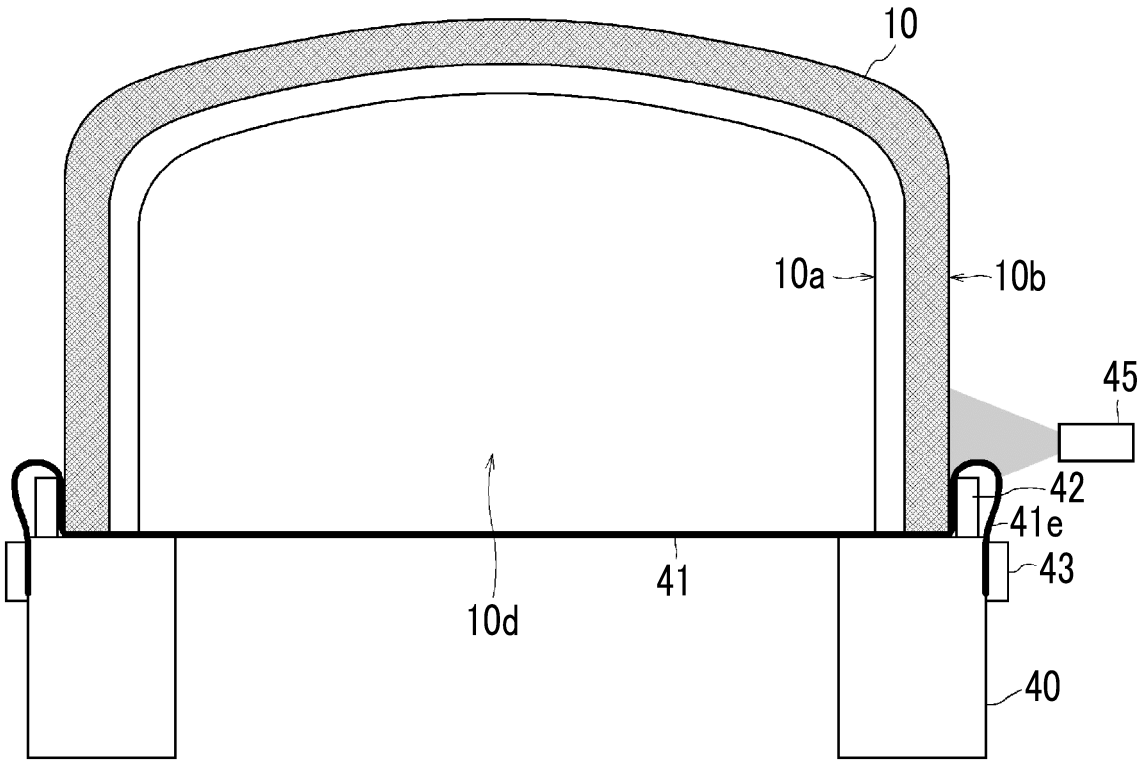
10
10a
10b
45
42
41e
43
10d
41
40

FIG. 16

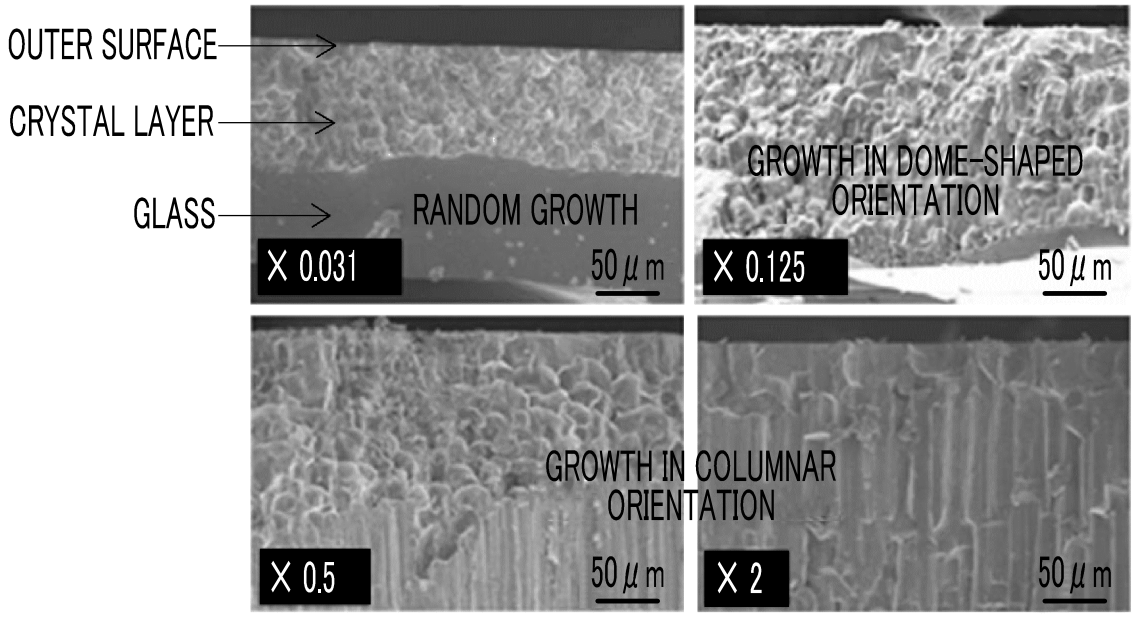
OUTER SURFACE
CRYSTAL LAYER
GLASS
RANDOM GROWTH
X 0.031
50 μm
GROWTH IN DOME-SHAPED ORIENTATION
X 0.125
50 μm
GROWTH IN COLUMNAR ORIENTATION
X 0.5
50 μm
X 2
50 μm

(a)

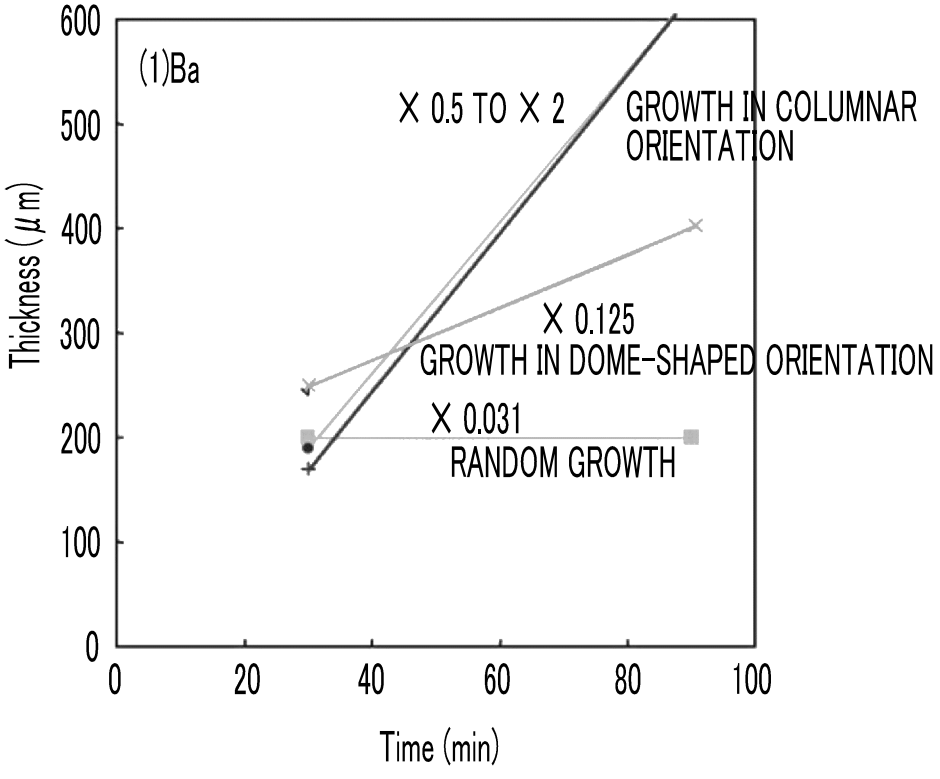
(1)Ba
X 0.5 TO X 2
GROWTH IN COLUMNAR ORIENTATION
X 0.125
GROWTH IN DOME-SHAPED ORIENTATION
X 0.031
RANDOM GROWTH
Thickness (μm)
Time (min)
600
500
400
300
200
100
0
0
20
40
60
80
100

(b)

FIG. 17

CRUCIBLE SAMPLE #1

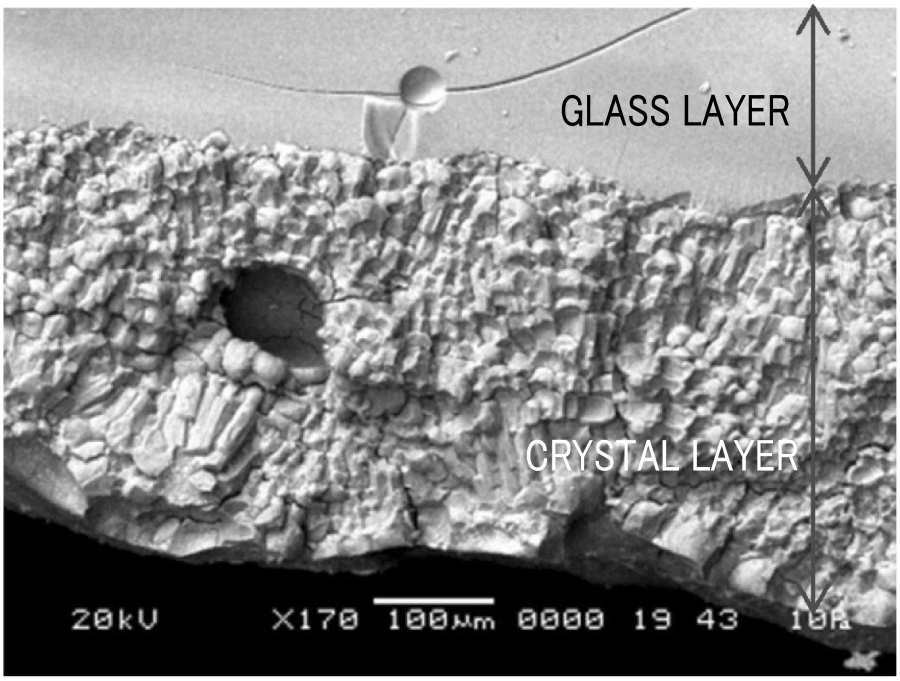

(a)

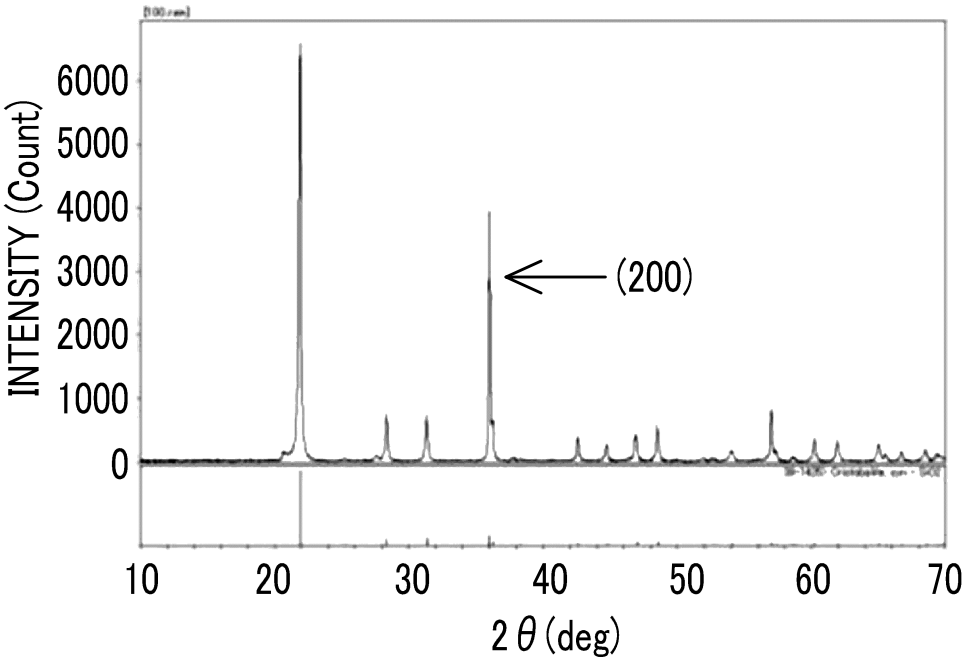

(b)

FIG. 18

CRUCIBLE SAMPLE #2

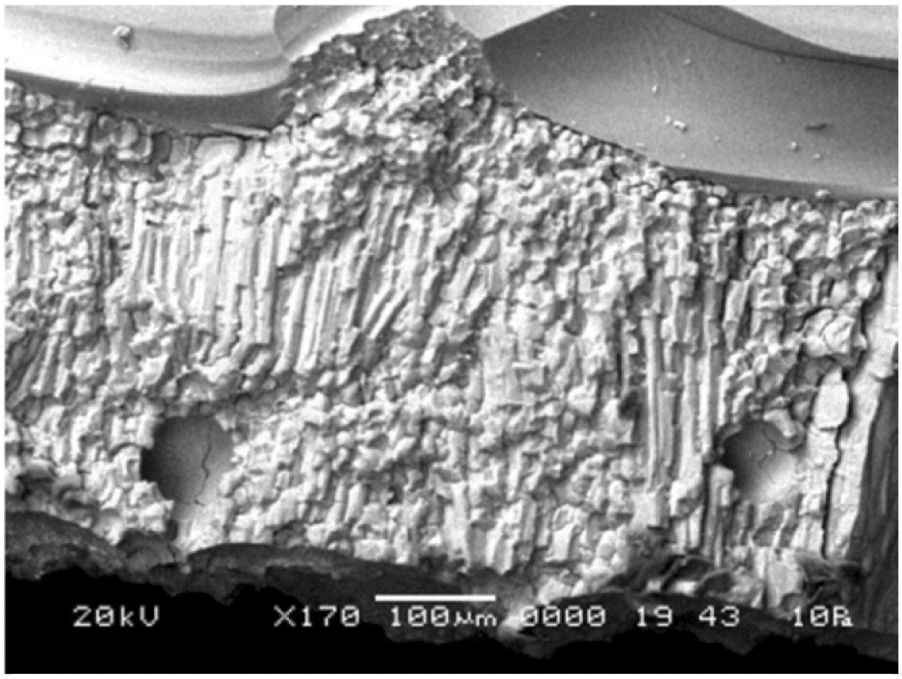

(a)

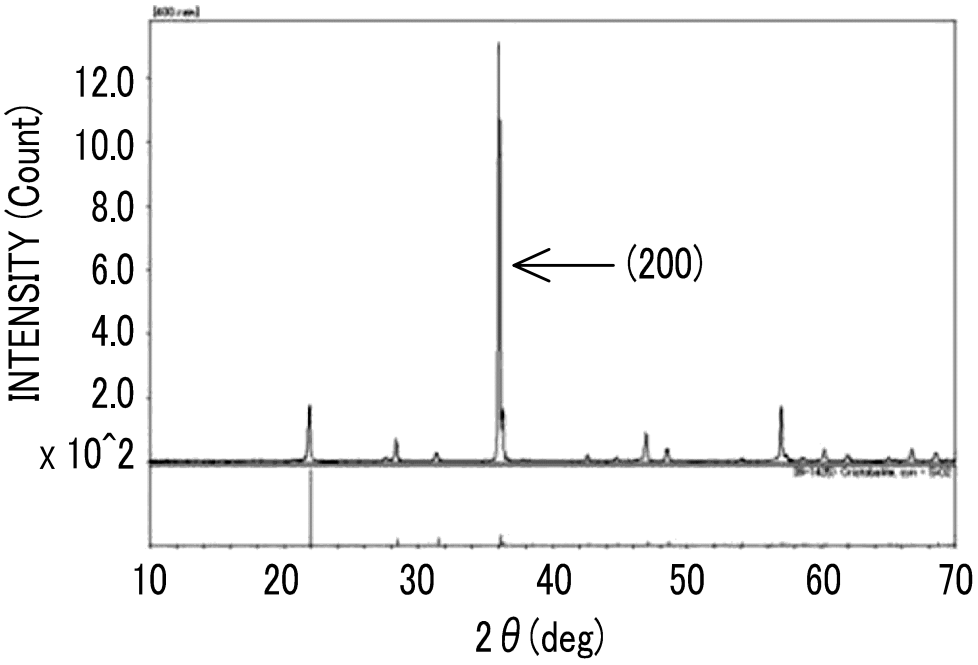

(b)

FIG. 19

CRUCIBLE SAMPLE #3

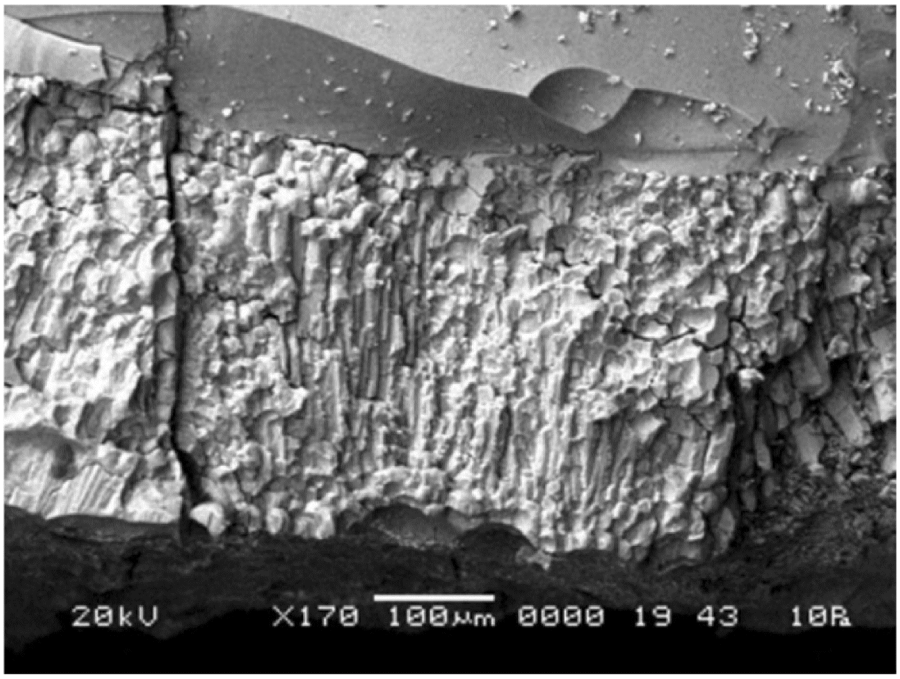

(a)

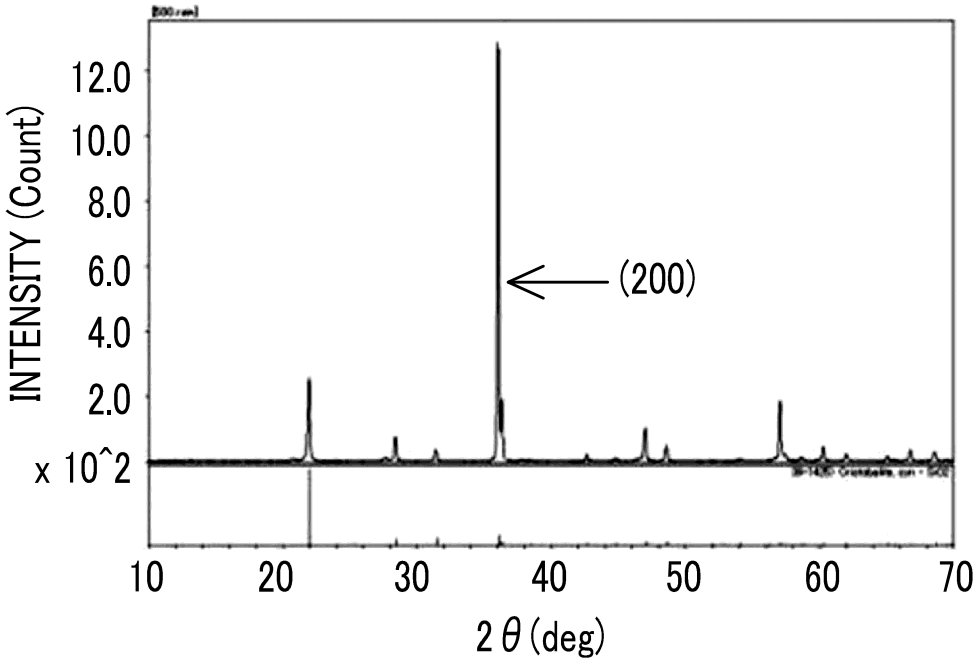

(b)

FIG. 20

SAMPLE	X1	X2	X3	X4	X5	X6
CRYSTAL LAYER POSITION	INNER SURFACE + OUTER SURFACE	INNER SURFACE + OUTER SURFACE	INNER SURFACE + OUTER SURFACE	INNER SURFACE + OUTER SURFACE	INNER SURFACE + OUTER SURFACE	INNER SURFACE + OUTER SURFACE
INNER SURFACE APPLICATION FILM Ba CONCENTRATION (atoms/cm^2)	1.0E17	8.0E15	1.0E17	8.0E15	2.4E17	6.0E15
INNER SURFACE CRYSTAL ORIENTATION	DOME-SHAPED + COLUMNAR	DOME-SHAPED	DOME-SHAPED + COLUMNAR	DOME-SHAPED	DOME-SHAPED + COLUMNAR	DOME-SHAPED
INNER CRYSTAL LAYER THICKNESS GRADIENT	0.8 TO 1.2	0.8 TO 1.2	0.8 TO 1.2	0.8 TO 1.2	0.8 TO 1.2	0.8 TO 1.2
INNER SURFACE Ba CONCENTRATION GRADIENT	70 TO 130%	70 TO 130%	70 TO 130%	70 TO 130%	70 TO 130%	70 TO 130%
INNER SURFACE Ba-ENRICHED LAYER THICKNESS	6um	6um	6um	6um	7um	5um
OUTER SURFACE APPLICATION FILM Ba CONCENTRATION (atoms/cm^2)	8.0E15	8.0E15	8.0E15	8.0E15	8.0E15	3.0E16
OUTER SURFACE CRYSTAL ORIENTATION	DOME-SHAPED	DOME-SHAPED	DOME-SHAPED	DOME-SHAPED	DOME-SHAPED	DOME-SHAPED
OUTER CRYSTAL LAYER THICKNESS GRADIENT	0.8 TO 1.2	0.8 TO 1.2	0.8 TO 1.2	0.8 TO 1.2	0.8 TO 1.2	0.8 TO 1.2
OUTER SURFACE Ba CONCENTRATION GRADIENT	70 TO 130%	70 TO 130%	70 TO 130%	70 TO 130%	70 TO 130%	70 TO 130%
OUTER SURFACE Ba-ENRICHED LAYER THICKNESS	6um	6um	6um	6um	6um	6um
CRYSTAL LAYER THICKNESS RATIO (INNER SURFACE/ OUTER SURFACE)	4.5	0.6	1.5	1.2	2.5	0.6
APPLICATION FILM Ba CONCENTRATION RATIO (INNER SURFACE/ OUTER SURFACE)	12.5	1	12.5	1	30	0.2
GLASS VISCOSITY RATIO	INNER SIDE/ OUTER SIDE =0.8	INNER SIDE/ OUTER SIDE =2.0	INNER SIDE/ OUTER SIDE =6.5	INNER SIDE/ OUTER SIDE =0.1	INNER SIDE/ OUTER SIDE =2	INNER SIDE/ OUTER SIDE =0.8
CRUCIBLE DEFORMATION	NO DEFORMATION	NO DEFORMATION	NO DEFORMATION	NO DEFORMATION	NO DEFORMATION	NO DEFORMATION
PRESENCE OR ABSENCE OF WRINKLES AND CRACKS	NO WRINKLES	NO WRINKLES	NO WRINKLES	NO WRINKLES	NO WRINKLES	NO WRINKLES
DELAMINATION	NO DELAMINATION	NO DELAMINATION	NO DELAMINATION	NO DELAMINATION	NO DELAMINATION	NO DELAMINATION
SINGLE CRYSTALLINITY	89%	88%	86%	87%	85%	85%

FIG. 21

SAMPLE	X7	X8	X9	X10	X11
CRYSTAL LAYER POSITION	INNER SURFACE + OUTER SURFACE	INNER SURFACE + OUTER SURFACE	INNER SURFACE + OUTER SURFACE	INNER SURFACE + OUTER SURFACE	INNER SURFACE + OUTER SURFACE
INNER SURFACE APPLICATION FILM Ba CONCENTRATION (atoms/cm^2)	1.0E17	1.0E17	2.4E17	2.4E17	8.0E15
INNER SURFACE CRYSTAL ORIENTATION	DOME-SHAPED + COLUMNAR	DOME-SHAPED + COLUMNAR	DOME-SHAPED + COLUMNAR	DOME-SHAPED + COLUMNAR	DOME-SHAPED
INNER CRYSTAL LAYER THICKNESS GRADIENT	PLACES HAVING 0.2 PRESENT	PLACES HAVING 0.2 PRESENT	PLACES HAVING 0.2 PRESENT	0.8 TO 1.2	0.8 TO 1.2
INNER SURFACE Ba CONCENTRATION GRADIENT	PLACES HAVING 30% PRESENT	PLACES HAVING 30% PRESENT	PLACES HAVING 30% PRESENT	70 TO 130%	70 TO 130%
INNER SURFACE Ba-ENRICHED LAYER THICKNESS	6um	6um	7um	7um	6um
OUTER SURFACE APPLICATION FILM Ba CONCENTRATION (atoms/cm^2)	8.0E15	8.0E15	8.0E15	8.0E15	1.0E17
OUTER SURFACE CRYSTAL ORIENTATION	DOME-SHAPED	DOME-SHAPED	DOME-SHAPED	DOME-SHAPED	DOME-SHAPED + COLUMNAR
OUTER CRYSTAL LAYER THICKNESS GRADIENT	PLACES HAVING 0.2 PRESENT	PLACES HAVING 0.2 PRESENT	PLACES HAVING 0.2 PRESENT	0.8 TO 1.2	0.8 TO 1.2
OUTER SURFACE Ba CONCENTRATION GRADIENT	PLACES HAVING 30% PRESENT	PLACES HAVING 30% PRESENT	PLACES HAVING 30% PRESENT	70 TO 130%	70 TO 130%
OUTER SURFACE Ba-ENRICHED LAYER THICKNESS	6um	6um	6um	6um	6um
CRYSTAL LAYER THICKNESS RATIO (INNER SURFACE/OUTER SURFACE)	4.5	1.5	4	6.5	0.1
APPLICATION FILM Ba CONCENTRATION RATIO (INNER SURFACE/OUTER SURFACE)	12.5	12.5	30	30	0.08
GLASS VISCOSITY RATIO	INNER SIDE/ OUTER SIDE =0.8	INNER SIDE/ OUTER SIDE =6.5	INNER SIDE/ OUTER SIDE =2	INNER SIDE/ OUTER SIDE =7.5	INNER SIDE/ OUTER SIDE =0.1
CRUCIBLE DEFORMATION	NO DEFORMATION	NO DEFORMATION	NO DEFORMATION	NO DEFORMATION	NO DEFORMATION
PRESENCE OR ABSENCE OF WRINKLES AND CRACKS	SOME WRINKLES PRESENT, NO CRACKS	SOME WRINKLES PRESENT, NO CRACKS	SOME WRINKLES PRESENT, NO CRACKS	SOME WRINKLES PRESENT ON INNER SIDE, NO CRACKS	SOME WRINKLES PRESENT ON OUTER SIDE, NO CRACKS
DELAMINATION	NO DELAMINATION	NO DELAMINATION	NO DELAMINATION	NO DELAMINATION	NO DELAMINATION
SINGLE CRYSTALLINITY	81%	79%	80%	80%	86%

FIG. 22

SAMPLE	X12	X13	X14	X15	X16	X17	X18
CRYSTAL LAYER POSITION	ONLY INNER SURFACE	ONLY INNER SURFACE	ONLY INNER SURFACE	ONLY INNER SURFACE	ONLY INNER SURFACE	ONLY INNER SURFACE	ONLY INNER SURFACE
INNER SURFACE APPLICATION FILM Ba CONCENTRATION (atoms/cm^2)	1.0E17	1.0E17	1.0E17	1.0E17	1.0E17	4.0E17	8.0E17
INNER SURFACE CRYSTAL ORIENTATION	DOME-SHAPED + COLUMNAR	DOME-SHAPED + COLUMNAR	DOME-SHAPED + COLUMNAR	DOME-SHAPED + COLUMNAR	DOME-SHAPED + COLUMNAR	DOME-SHAPED + COLUMNAR	DOME-SHAPED + COLUMNAR
INNER SURFACE CRYSTAL LAYER THICKNESS GRADIENT	0.8 TO 1.2	0.8 TO 1.2	0.8 TO 1.2	0.8 TO 1.2	PLACES HAVING 0.2 PRESENT	0.8 TO 1.2	0.8 TO 1.2
INNER SURFACE Ba CONCENTRATION GRADIENT	70 TO 130%	70 TO 130%	70 TO 130%	70 TO 130%	PLACES HAVING 30% PRESENT	70 TO 130%	70 TO 130%
INNER SURFACE Ba-ENRICHED LAYER THICKNESS	0.6um	18um	6um	6um	6um	30um	80um
OUTER SURFACE APPLICATION FILM Ba CONCENTRATION (atoms/cm^2)							
OUTER SURFACE CRYSTAL ORIENTATION							
OUTER CRYSTAL LAYER THICKNESS GRADIENT							
OUTER SURFACE Ba CONCENTRATION GRADIENT							
OUTER SURFACE Ba-ENRICHED LAYER THICKNESS							
GLASS VISCOSITY RATIO	OUTER SIDE/ INNER SIDE =3.0	OUTER SIDE/ INNER SIDE =3.0	OUTER SIDE/ INNER SIDE =0.3	OUTER SIDE/ INNER SIDE =12	OUTER SIDE/ INNER SIDE =3.0	OUTER SIDE/ INNER SIDE =3.0	OUTER SIDE/ INNER SIDE =3.0
CRUCIBLE DEFORMATION	NO DEFORMATION	NO DEFORMATION	SLIGHT DEFORMATION	SLIGHT DEFORMATION	NO DEFORMATION	NO DEFORMATION	NO DEFORMATION
PRESENCE OR ABSENCE OF WRINKLES AND CRACKS	NO WRINKLES	NO WRINKLES	NO WRINKLES	NO WRINKLES	SOME WRINKLES PRESENT, NO CRACKS	SOME WRINKLES PRESENT, NO CRACKS	WRINKLES PRESENT, CRACKS PRESENT
DELAMINATION	NO DELAMINATION	NO DELAMINATION	NO DELAMINATION	NO DELAMINATION	NO DELAMINATION	NO DELAMINATION	NO DELAMINATION
SINGLE CRYSTALLINITY	89%	93%	81%	81%	80%	83%	72%

FIG. 23

SAMPLE	X19	X20	X21	X22	X23	X24
CRYSTAL LAYER POSITION	ONLY OUTER SURFACE	ONLY OUTER SURFACE	ONLY OUTER SURFACE	ONLY OUTER SURFACE	ONLY OUTER SURFACE	ONLY OUTER SURFACE
INNER SURFACE APPLICATION FILM Ba CONCENTRATION (atoms/cm^2)						
INNER SURFACE CRYSTAL ORIENTATION						
INNER CRYSTAL LAYER THICKNESS GRADIENT						
INNER SURFACE Ba CONCENTRATION GRADIENT						
INNER SURFACE Ba-ENRICHED LAYER THICKNESS						
OUTER SURFACE APPLICATION FILM Ba CONCENTRATION (atoms/cm^2)	8.0E15	8.0E15	8.0E15	8.0E15	4.0E17	8.0E17
OUTER SURFACE CRYSTAL ORIENTATION	DOME-SHAPED	DOME-SHAPED	DOME-SHAPED	DOME-SHAPED	DOME-SHAPED + COLUMNAR	DOME-SHAPED + COLUMNAR
OUTER CRYSTAL LAYER THICKNESS GRADIENT	0.8 TO 1.2	0.8 TO 1.2	0.8 TO 1.2	PLACES HAVING 0.2 PRESENT	0.8 TO 1.2	0.8 TO 1.2
OUTER SURFACE Ba CONCENTRATION GRADIENT	70 TO 130%	70 TO 130%	70 TO 130%	PLACES HAVING 30% PRESENT	70 TO 130%	70 TO 130%
OUTER SURFACE Ba-ENRICHED LAYER THICKNESS	0.6um	18um	6um	6um	50um	80um
GLASS VISCOSITY RATIO	INNER SIDE/ OUTER SIDE =2.0	INNER SIDE/ OUTER SIDE =2.0	INNER SIDE/ OUTER SIDE =0.3	INNER SIDE/ OUTER SIDE =2.0	INNER SIDE/ OUTER SIDE =2.0	OUTER SIDE/ INNER SIDE =3.0
CRUCIBLE DEFORMATION	NO DEFORMATION	NO DEFORMATION	SLIGHT DEFORMATION	NO DEFORMATION	NO DEFORMATION	SLIGHT DEFORMATION
PRESENCE OR ABSENCE OF WRINKLES AND CRACKS	NO WRINKLES	NO WRINKLES	NO WRINKLES	SOME WRINKLES PRESENT, NO CRACKS	SOME WRINKLES PRESENT, NO CRACKS	WRINKLES PRESENT, CRACKS PRESENT
DELAMINATION	NO DELAMINATION	NO DELAMINATION	NO DELAMINATION	NO DELAMINATION	NO DELAMINATION	NO DELAMINATION
SINGLE CRYSTALLINITY	88%	93%	80%	79%	88%	72%

FIG. 24

SAMPLE	Y1	Y2	Y3	Y4	Y5	Y6
CRYSTAL LAYER POSITION	INNER SURFACE + OUTER SURFACE	INNER SURFACE + OUTER SURFACE	ONLY INNER SURFACE	ONLY INNER SURFACE	ONLY OUTER SURFACE	ONLY OUTER SURFACE
INNER SURFACE APPLICATION FILM Ba CONCENTRATION (atoms/cm^2)	3.0E15	1.0E14	1.0E14	1.0E14		
INNER SURFACE CRYSTAL ORIENTATION	RANDOM	RANDOM	RANDOM	RANDOM		
INNER CRYSTAL LAYER THICKNESS GRADIENT	PLACES HAVING 0.2 PRESENT	PLACES HAVING 0.2 PRESENT	0.5 TO 1.5	PLACES HAVING 0.2 PRESENT		
INNER SURFACE Ba CONCENTRATION GRADIENT	PLACES HAVING 30% PRESENT	PLACES HAVING 30% PRESENT	40 TO 150%	PLACES HAVING 30% PRESENT		
INNER SURFACE Ba-ENRICHED LAYER THICKNESS	DETECTION LIMIT OR LOWER	DETECTION LIMIT OR LOWER	DETECTION LIMIT OR LOWER	DETECTION LIMIT OR LOWER		
OUTER SURFACE APPLICATION FILM Ba CONCENTRATION (atoms/cm^2)	1.0E14	1.0E15			1.0E14	1.0E14
OUTER SURFACE CRYSTAL ORIENTATION	RANDOM	RANDOM			RANDOM	RANDOM
OUTER CRYSTAL LAYER THICKNESS GRADIENT	PLACES HAVING 0.2 PRESENT	PLACES HAVING 0.2 PRESENT			0.8 TO 1.2	PLACES HAVING 0.2 PRESENT
OUTER SURFACE Ba CONCENTRATION GRADIENT	PLACES HAVING 30% PRESENT	PLACES HAVING 30% PRESENT			70 TO 130%	PLACES HAVING 30% PRESENT
OUTER SURFACE Ba-ENRICHED LAYER THICKNESS	DETECTION LIMIT OR LOWER	DETECTION LIMIT OR LOWER			DETECTION LIMIT OR LOWER	DETECTION LIMIT OR LOWER
CRYSTAL LAYER THICKNESS RATIO (INNER SURFACE/ OUTER SURFACE)	6.5	0.1				
APPLICATION FILM Ba CONCENTRATION RATIO (INNER SURFACE/ OUTER SURFACE)	30	0.1				
GLASS VISCOSITY RATIO	INNER SIDE/ OUTER SIDE =30	INNER SIDE/ OUTER SIDE =0.1	OUTER SIDE/ INNER SIDE =3.0	OUTER SIDE/ INNER SIDE =12	OUTER SIDE/ INNER SIDE =3.0	INNER SIDE/ OUTER SIDE =0.3
CRUCIBLE DEFORMATION	DEFORMED	DEFORMED	DEFORMED	DEFORMED	DEFORMED	DEFORMED
PRESENCE OR ABSENCE OF WRINKLES AND CRACKS	WRINKLES PRESENT, CRACKS PRESENT	WRINKLES PRESENT, CRACKS PRESENT	NO WRINKLES	WRINKLES PRESENT, CRACKS PRESENT	NO WRINKLES	WRINKLES PRESENT, CRACKS PRESENT
DELAMINATION	DELAMINATION OCCURRED	DELAMINATION OCCURRED	NO DELAMINATION	DELAMINATION OCCURRED	NO DELAMINATION	DELAMINATION OCCURRED
SINGLE CRYSTALLINITY	53%	53%	59%	48%	60%	49%