[図1]

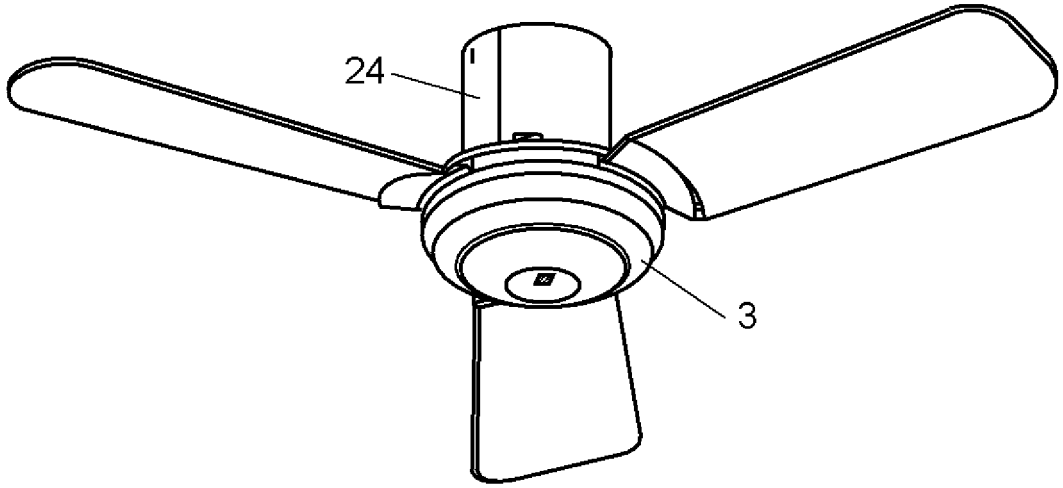

[図2]

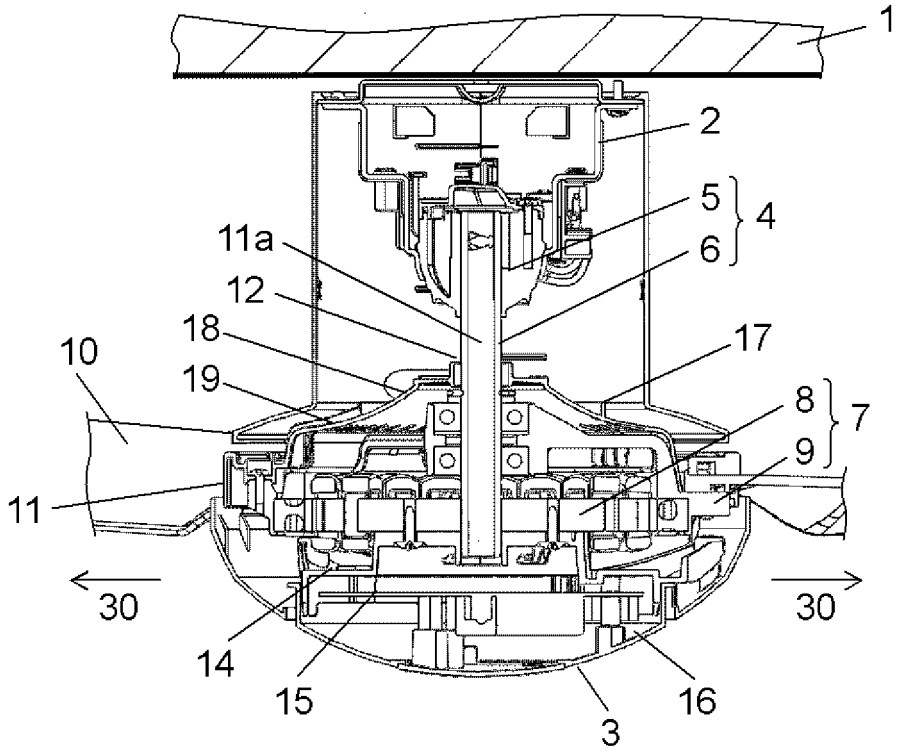

[図3]

