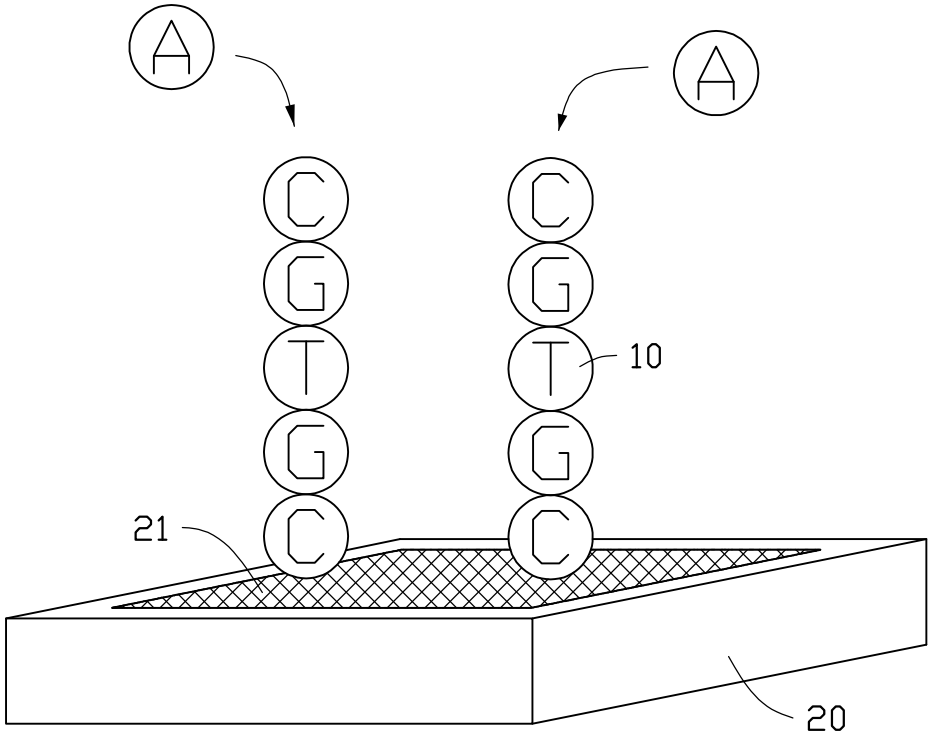

FIG. 1

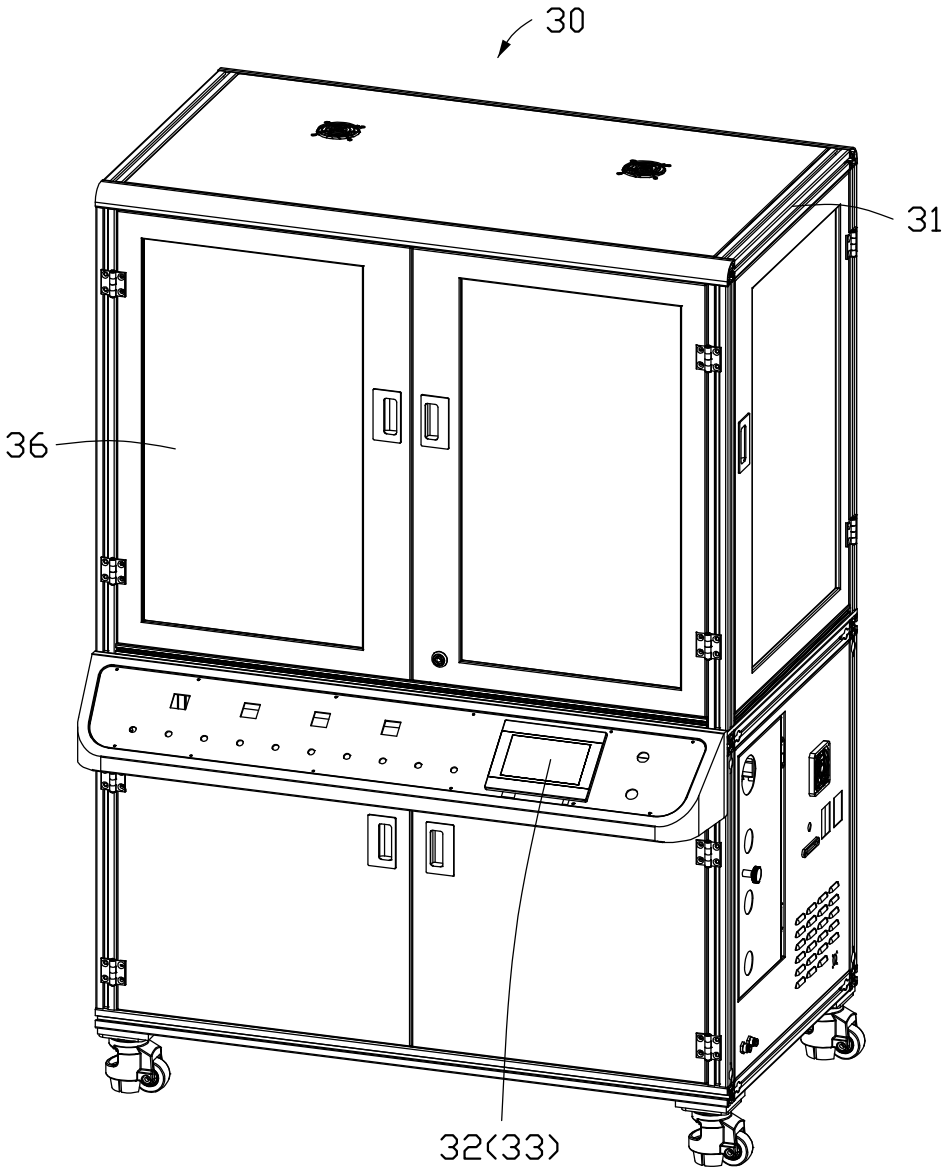

FIG. 2

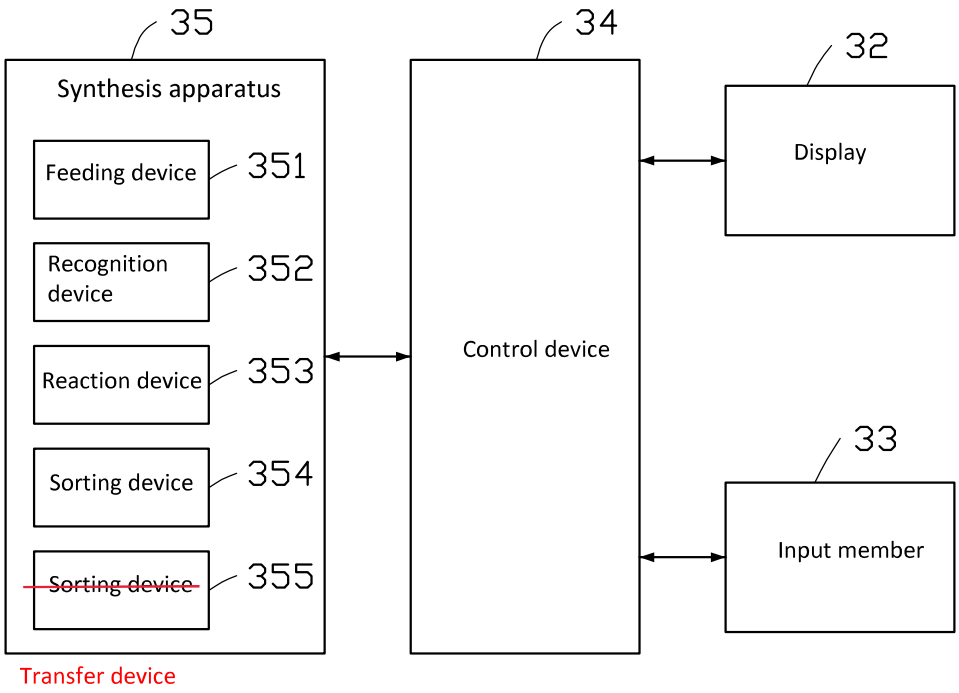
35
Synthesis apparatus
Feeding device
351
Recognition device
352
Reaction device
353
Sorting device
354
Sorting device
355
Transfer device
34
Control device
32
Display
33
Input member

FIG. 3

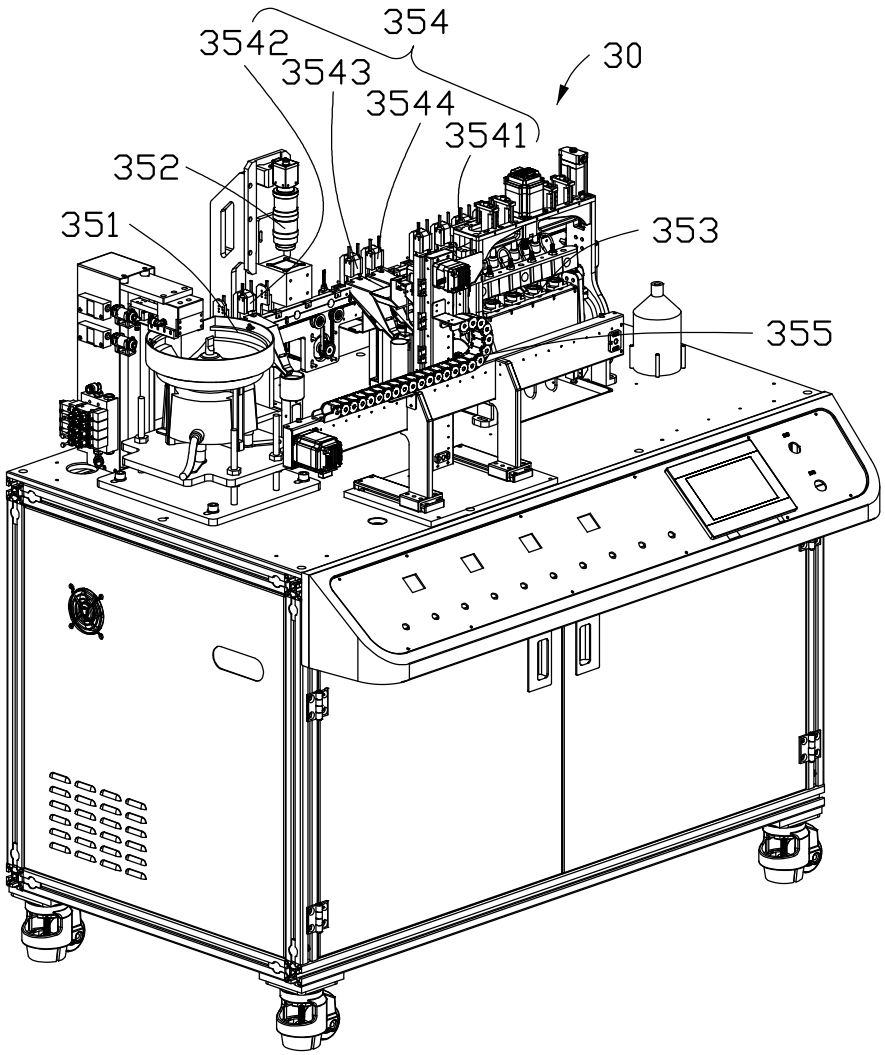

FIG. 4

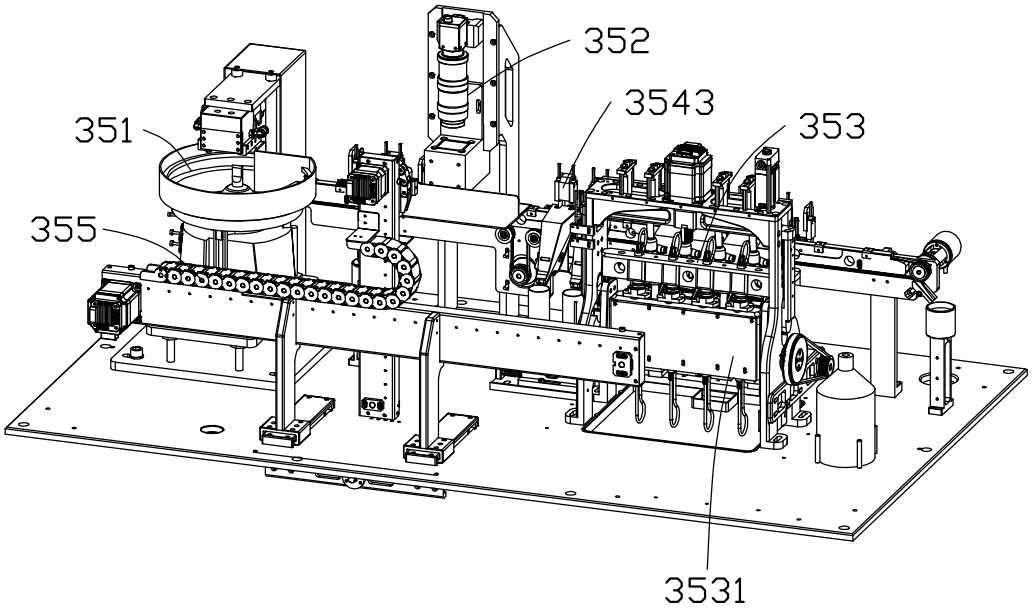

FIG. 5

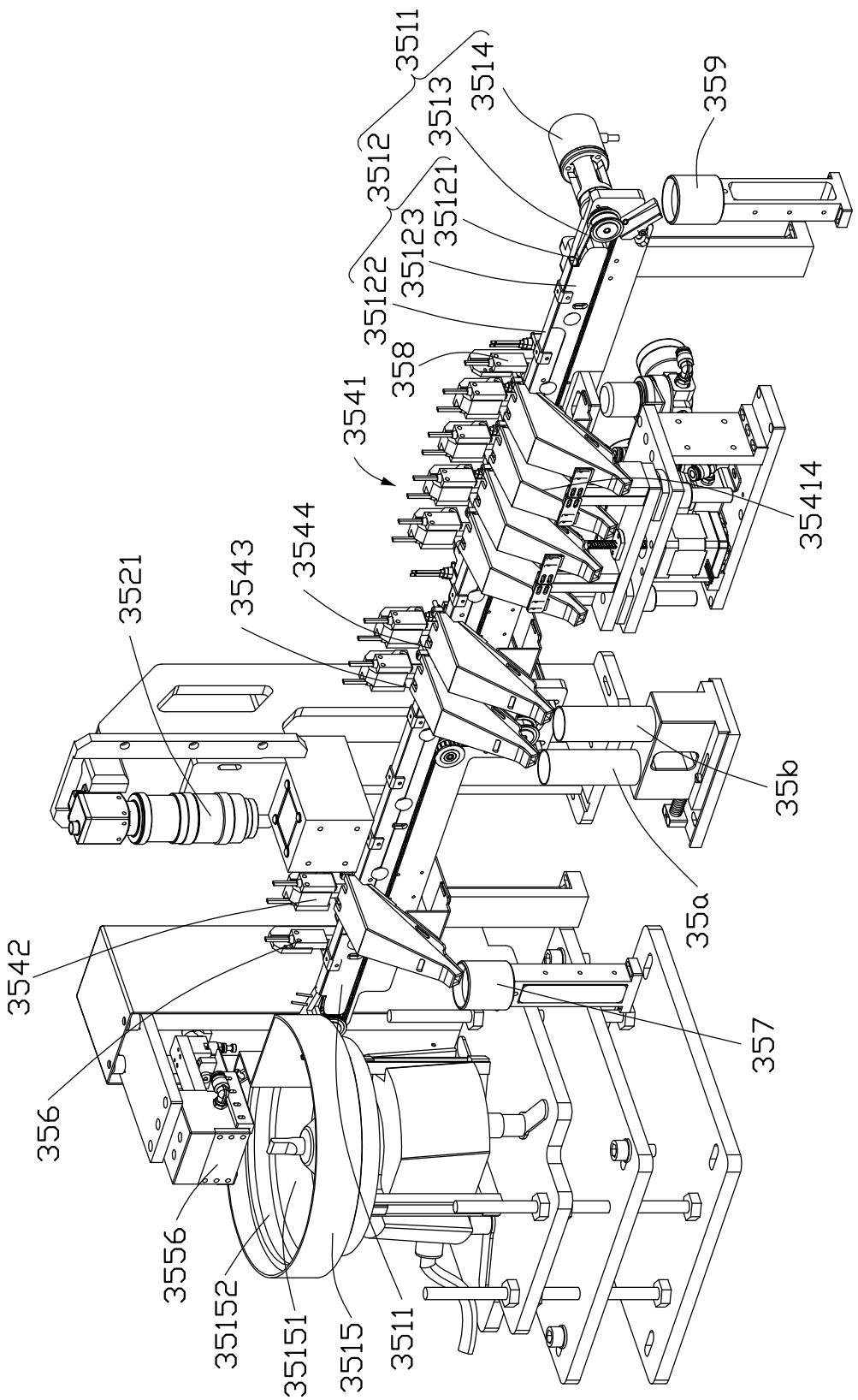
3511
3514
359
3513
3512
35121
35123
35122
358
3541
35414
3544
3543
3521
35b
35a
3542
357
356
3556
35152
35151
3515
3511

FIG. 6

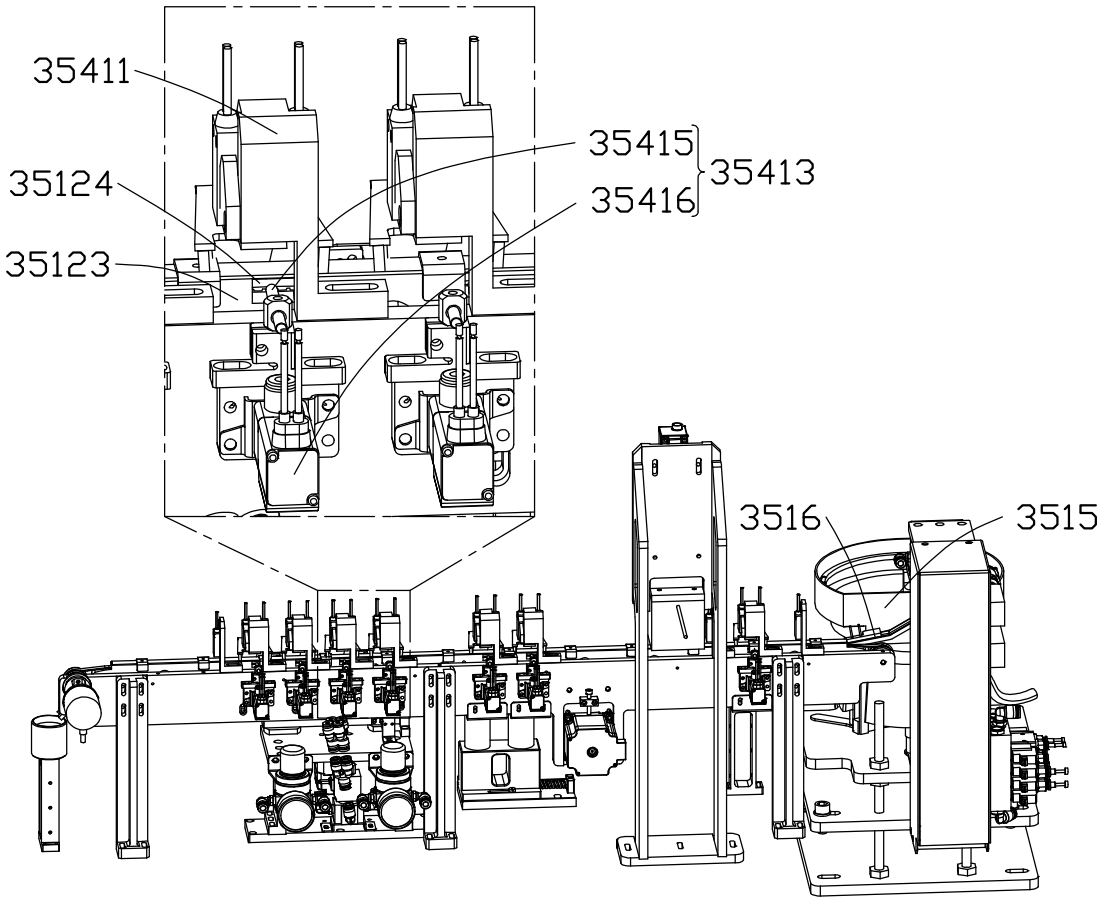

FIG. 7

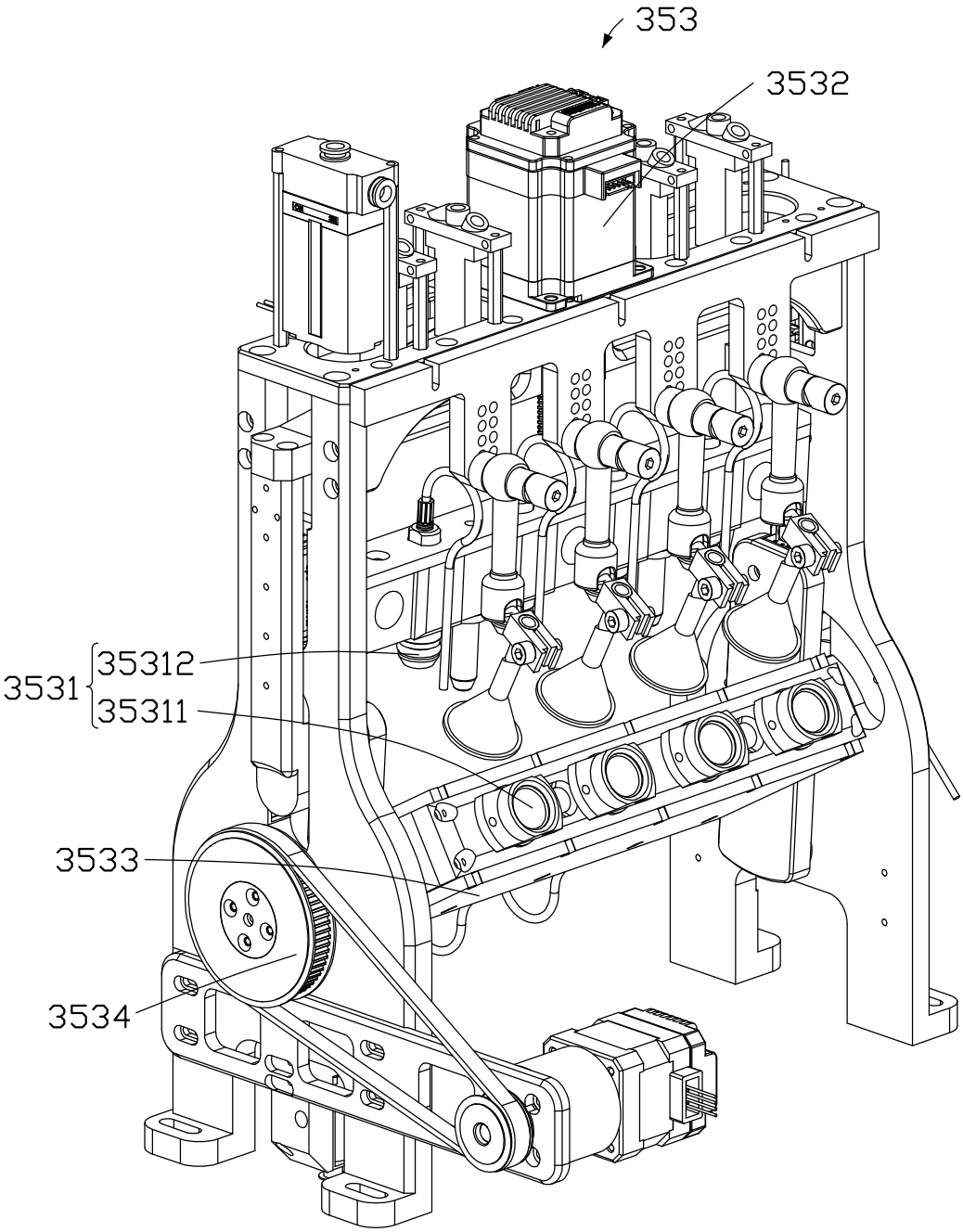

FIG. 8

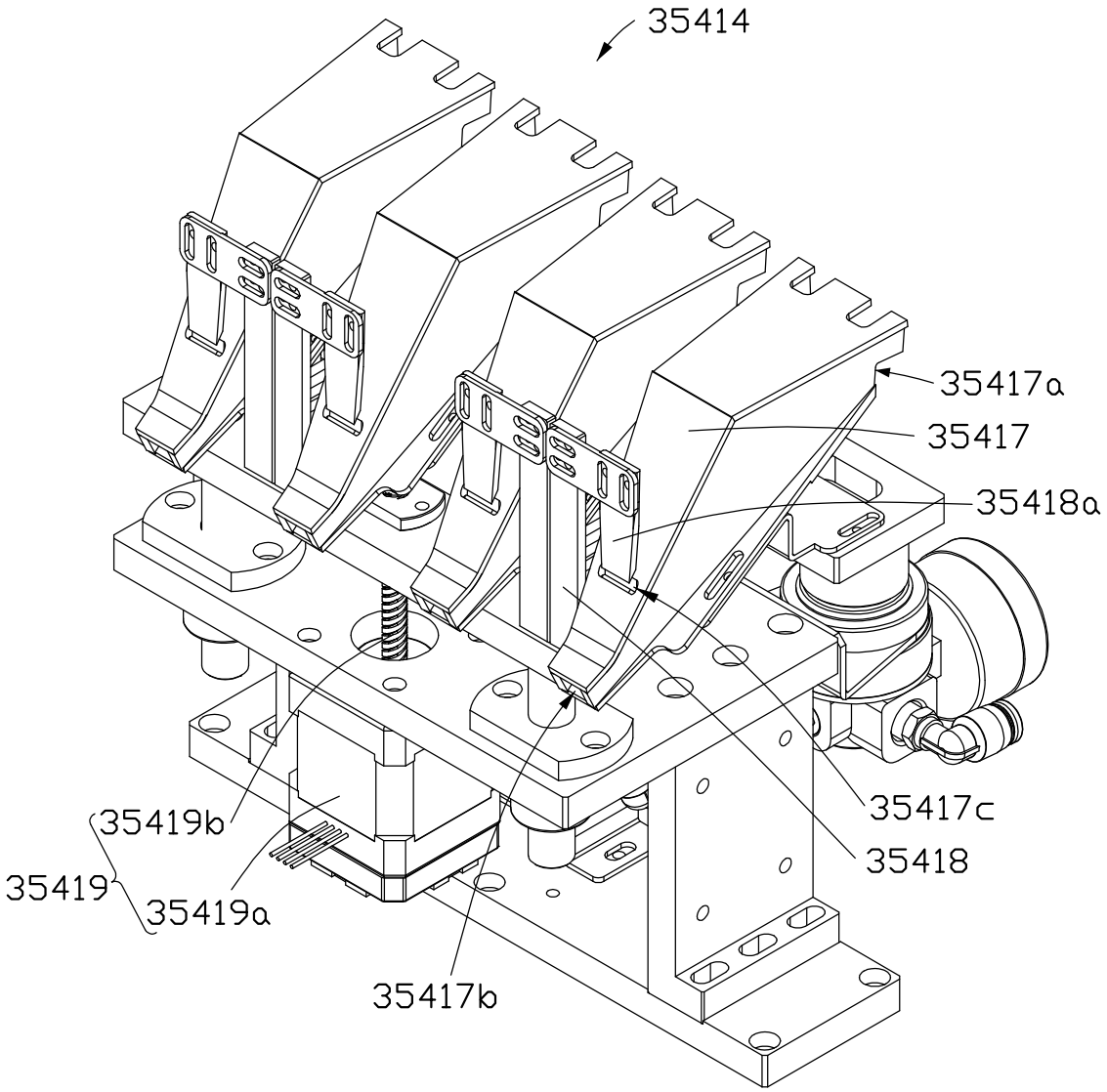
35414
35417a
35417
35418a
35417c
35418
35419b
35419
35419a
35417b

FIG. 9

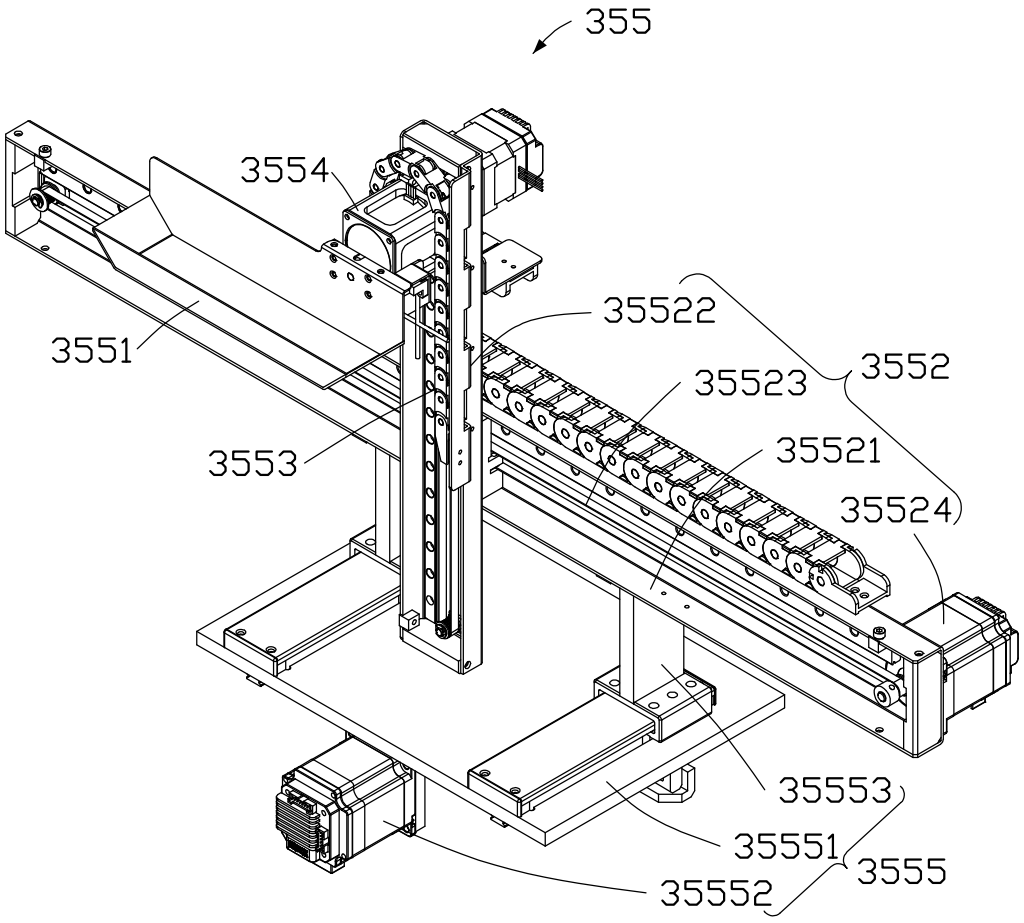
355
3554
3551
35522
3552
35523
3553
35521
35524
35553
35551
3555
35552

FIG. 10

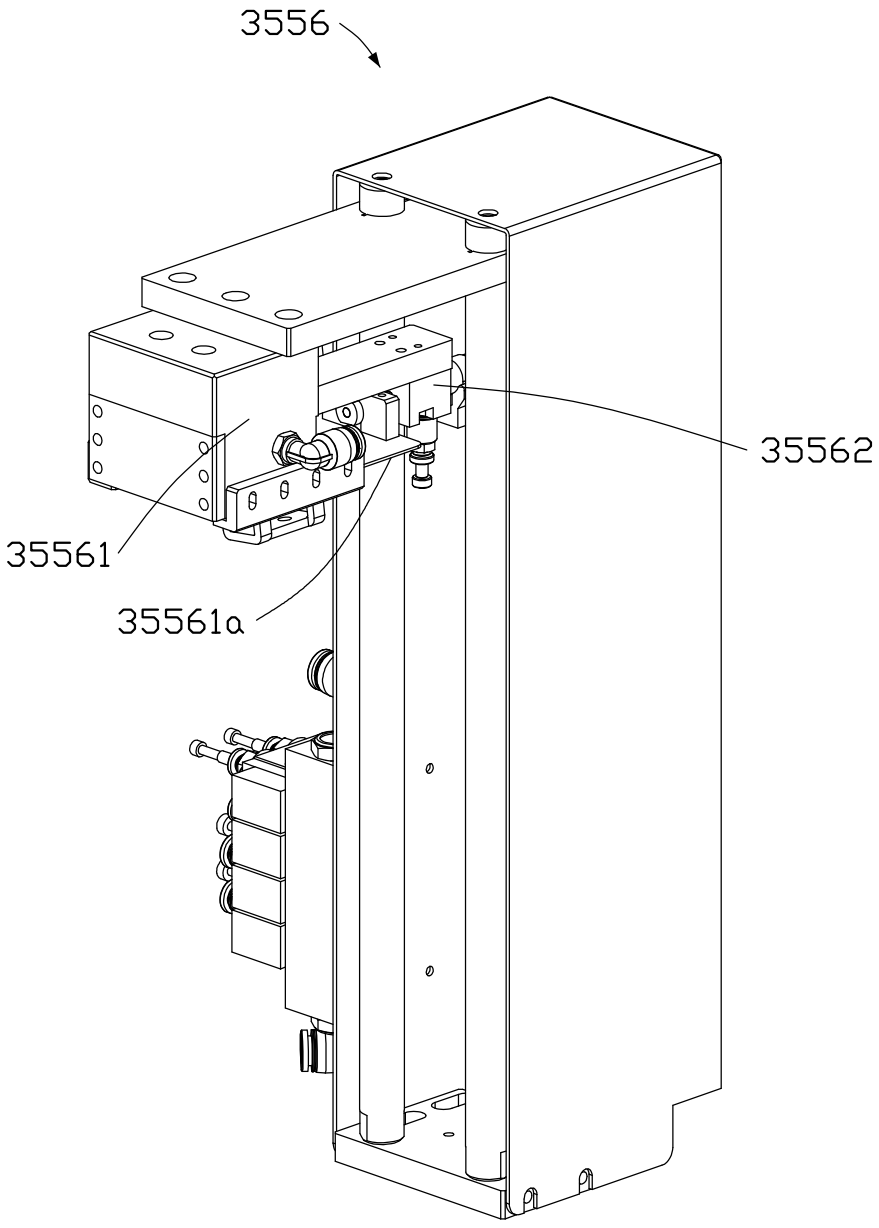

FIG. 11

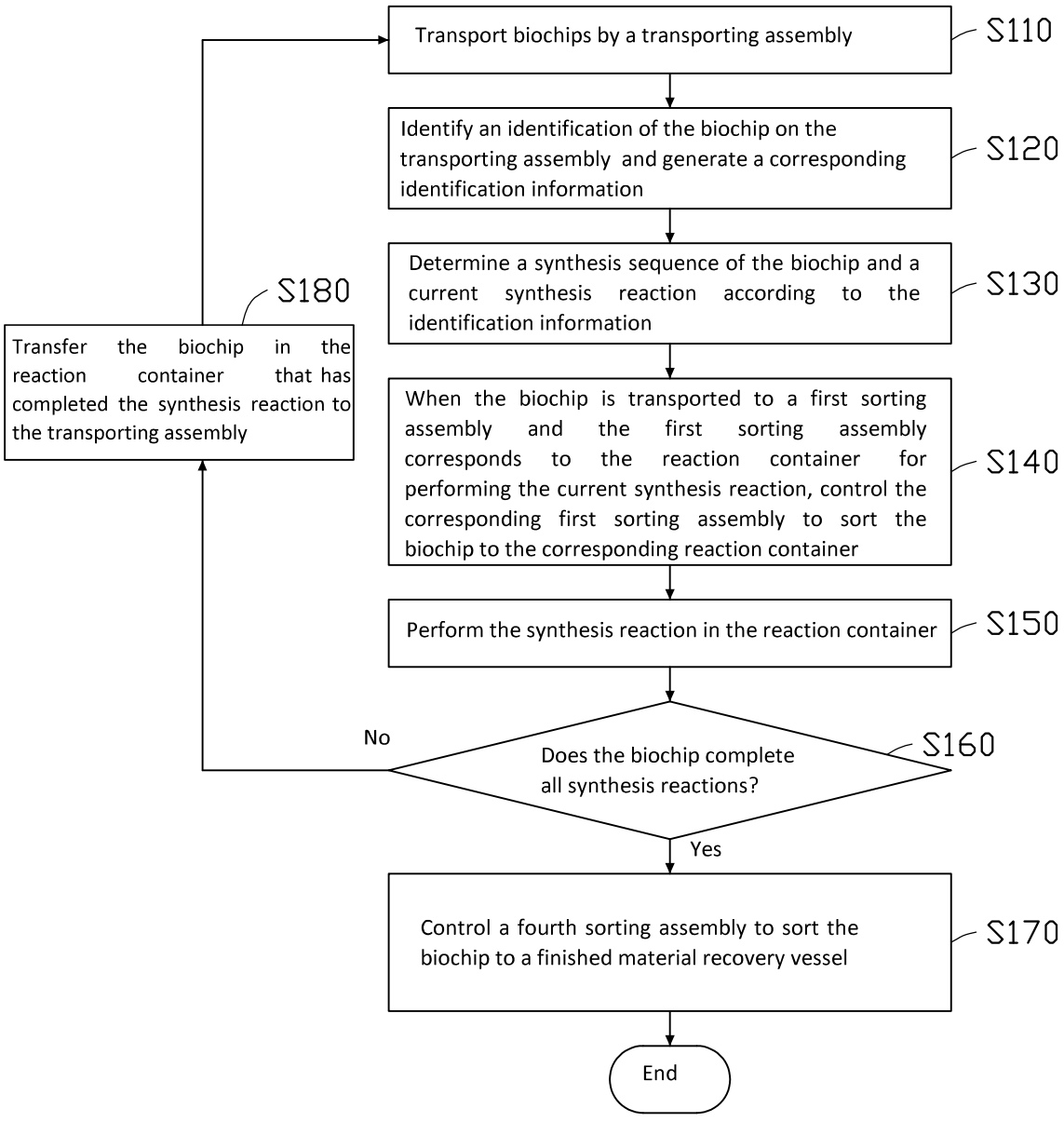
Transport biochips by a transporting assembly
S110
Identify an identification of the biochip on the transporting assembly and generate a corresponding identification information
S120
Determine a synthesis sequence of the biochip and a current synthesis reaction according to the identification information
S130
When the biochip is transported to a first sorting assembly and the first sorting assembly corresponds to the reaction container for performing the current synthesis reaction, control the corresponding first sorting assembly to sort the biochip to the corresponding reaction container
S140
Perform the synthesis reaction in the reaction container
S150
Does the biochip complete all synthesis reactions?
S160
No
Yes
Control a fourth sorting assembly to sort the biochip to a finished material recovery vessel
S170
End
S180
Transfer the biochip in the reaction container that has completed the synthesis reaction to the transporting assembly

FIG. 12

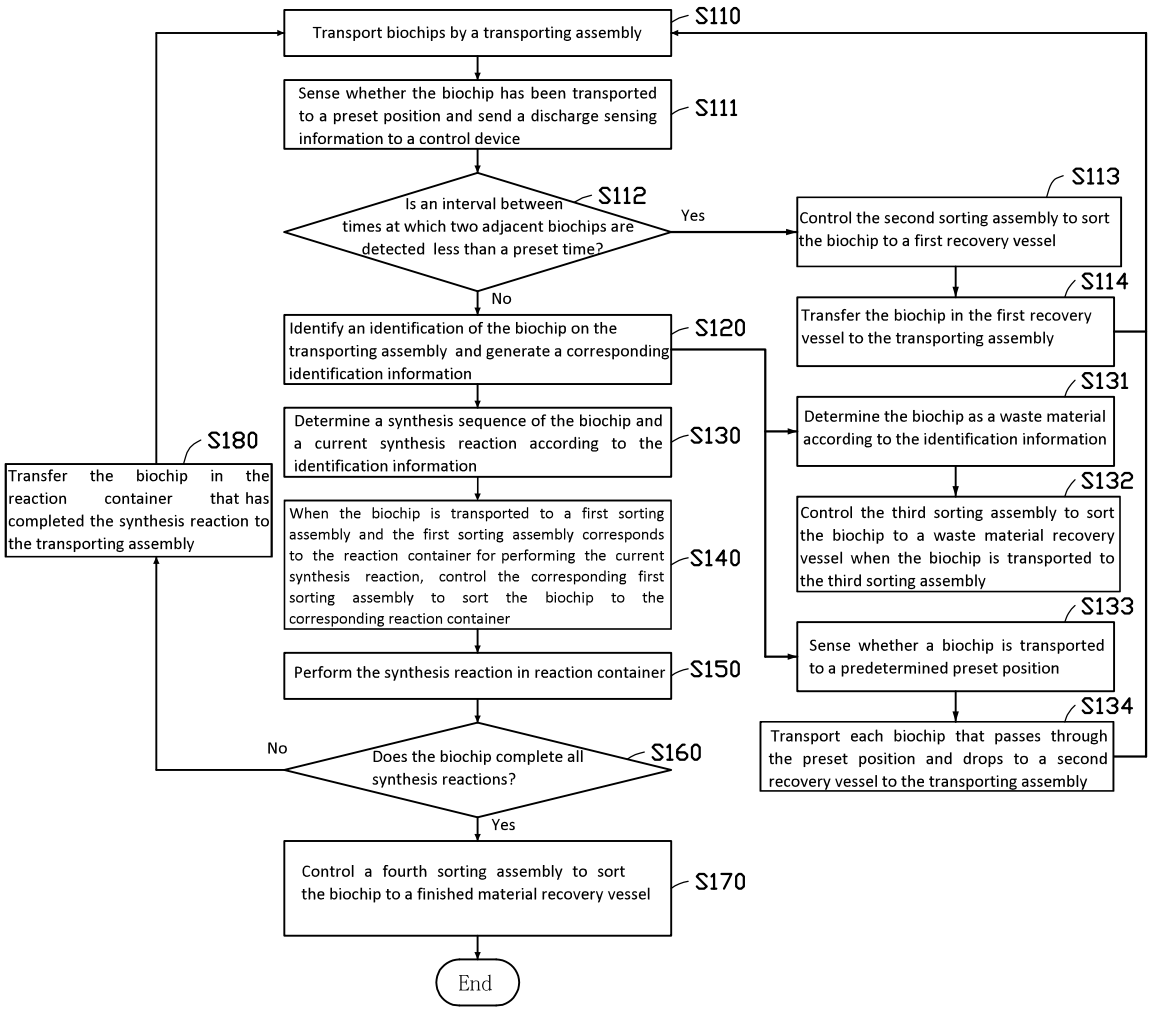
Transport biochips by a transporting assembly
S110
Sense whether the biochip has been transported to a preset position and send a discharge sensing information to a control device
S111
Is an interval between times at which two adjacent biochips are detected less than a preset time?
S112
Yes
No
Control the second sorting assembly to sort the biochip to a first recovery vessel
S113
Transfer the biochip in the first recovery vessel to the transporting assembly
S114
Identify an identification of the biochip on the transporting assembly and generate a corresponding identification information
S120
Determine a synthesis sequence of the biochip and a current synthesis reaction according to the identification information
S130
Determine the biochip as a waste material according to the identification information
S131
Control the third sorting assembly to sort the biochip to a waste material recovery vessel when the biochip is transported to the third sorting assembly
S132
When the biochip is transported to a first sorting assembly and the first sorting assembly corresponds to the reaction container for performing the current synthesis reaction, control the corresponding first sorting assembly to sort the biochip to the corresponding reaction container
S140
Sense whether a biochip is transported to a predetermined preset position
S133
Perform the synthesis reaction in reaction container
S150
Transport each biochip that passes through the preset position and drops to a second recovery vessel to the transporting assembly
S134
Transfer the biochip in the reaction container that has completed the synthesis reaction to the transporting assembly
S180
Does the biochip complete all synthesis reactions?
S160
No
Yes
Control a fourth sorting assembly to sort the biochip to a finished material recovery vessel
S170
End

FIG. 13