Fig. 1

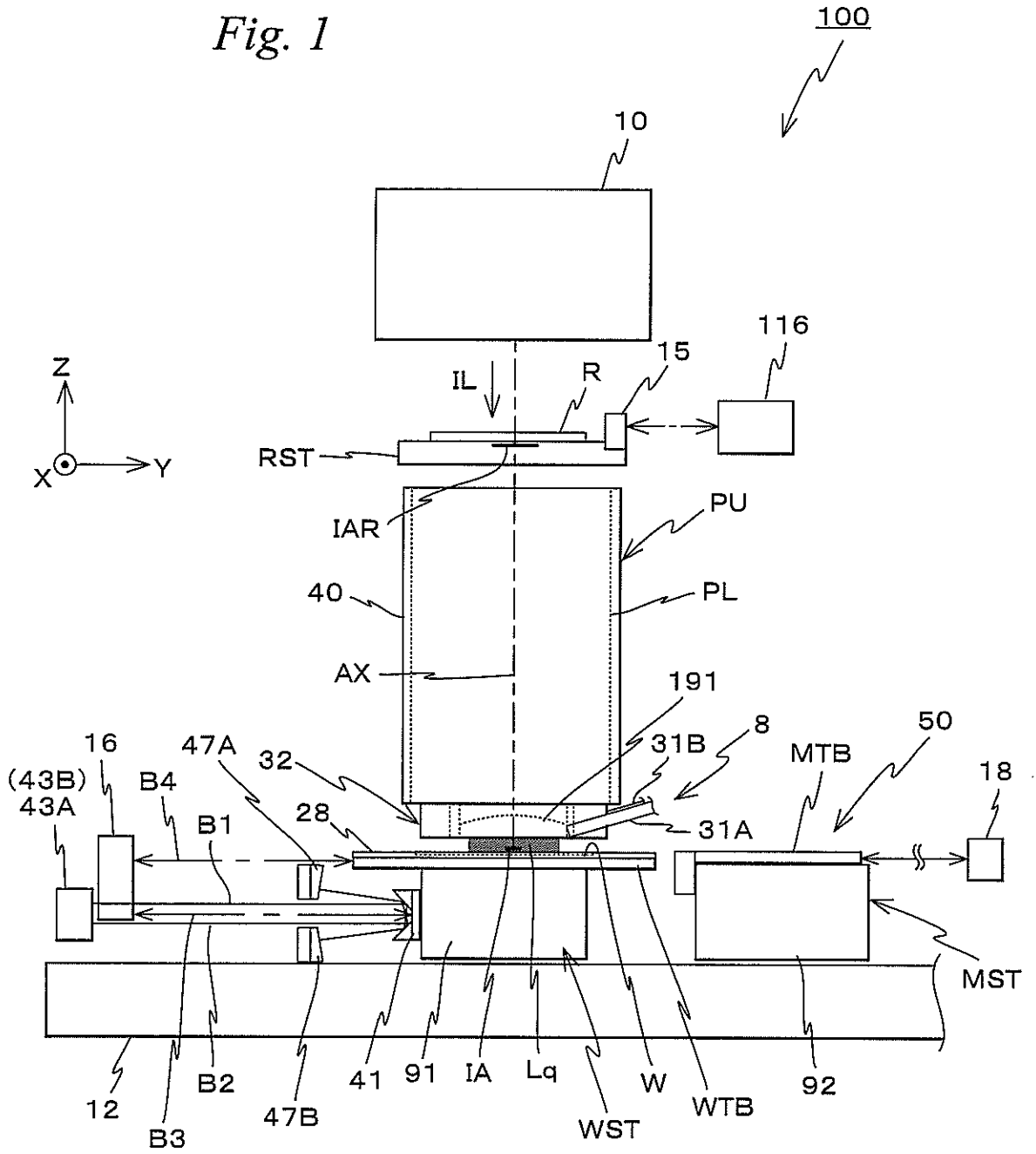
100
10
116
15
IL
R
Z
X
Y
RST
IAR
PU
PL
40
AX
191
8
31B
50
MTB
18
16
47A
32
(43B)
43A
B4
B1
28
31A
MST
12
B3
B2
47B
41
91
IA
Lq
W
WST
WTB
92

Fig. 2

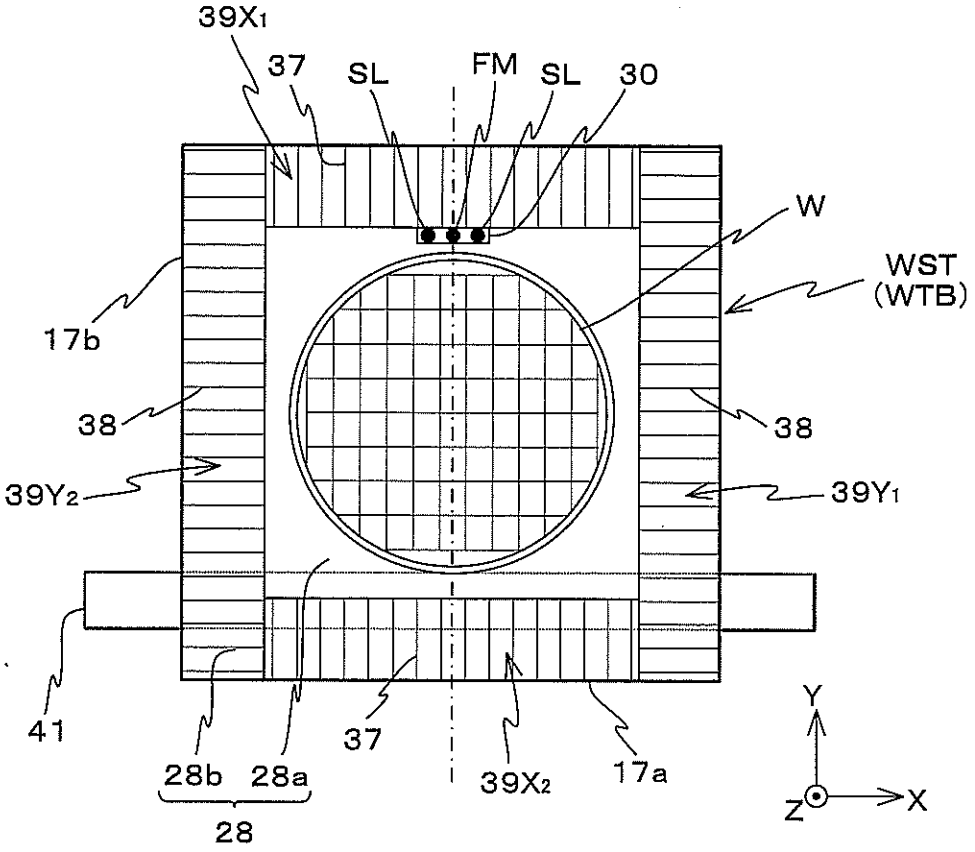
39X1
37
SL
FM
SL
30
W
WST
(WTB)
17b
38
38
39Y2
39Y1
41
28b
28a
28
37
39X2
17a
Y
Z
X

Fig. 3

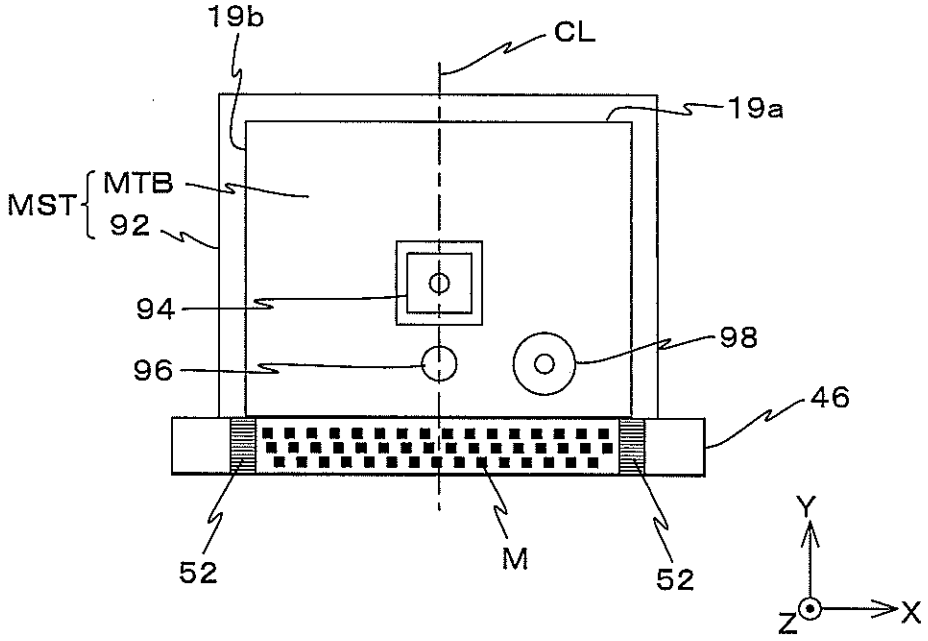
19b
CL
19a
MST
MTB
92
94
96
98
46
52
M
52
Y
Z
X

Fig. 4

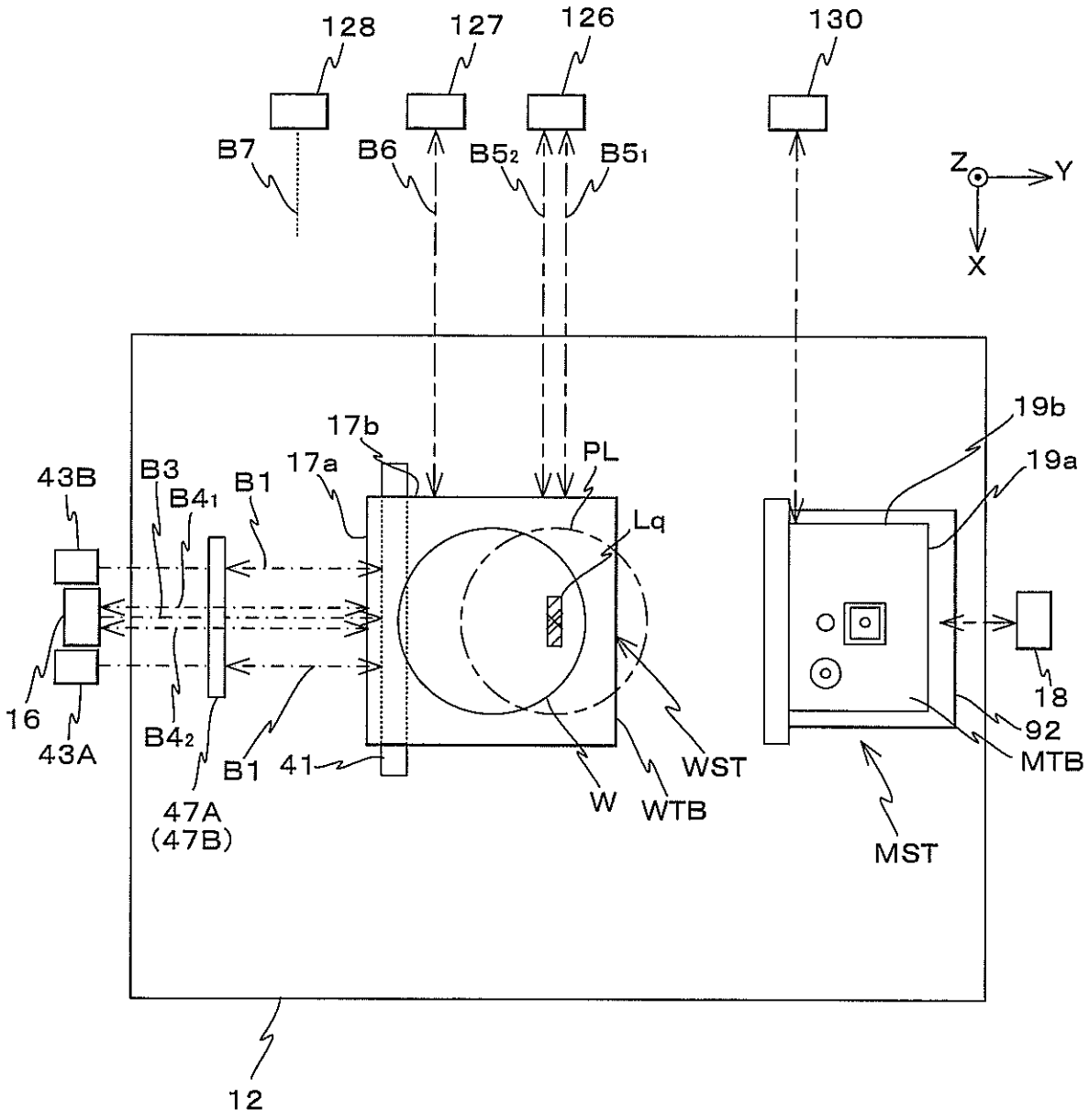
128
127
126
130
B7
B6
B5₂
B5₁
Z
Y
X
17b
17a
PL
19b
19a
43B
B3
B4₁
B1
Lq
16
43A
B4₂
B1
41
47A
(47B)
W
WTB
WST
MST
18
92
MTB
12

Fig. 5

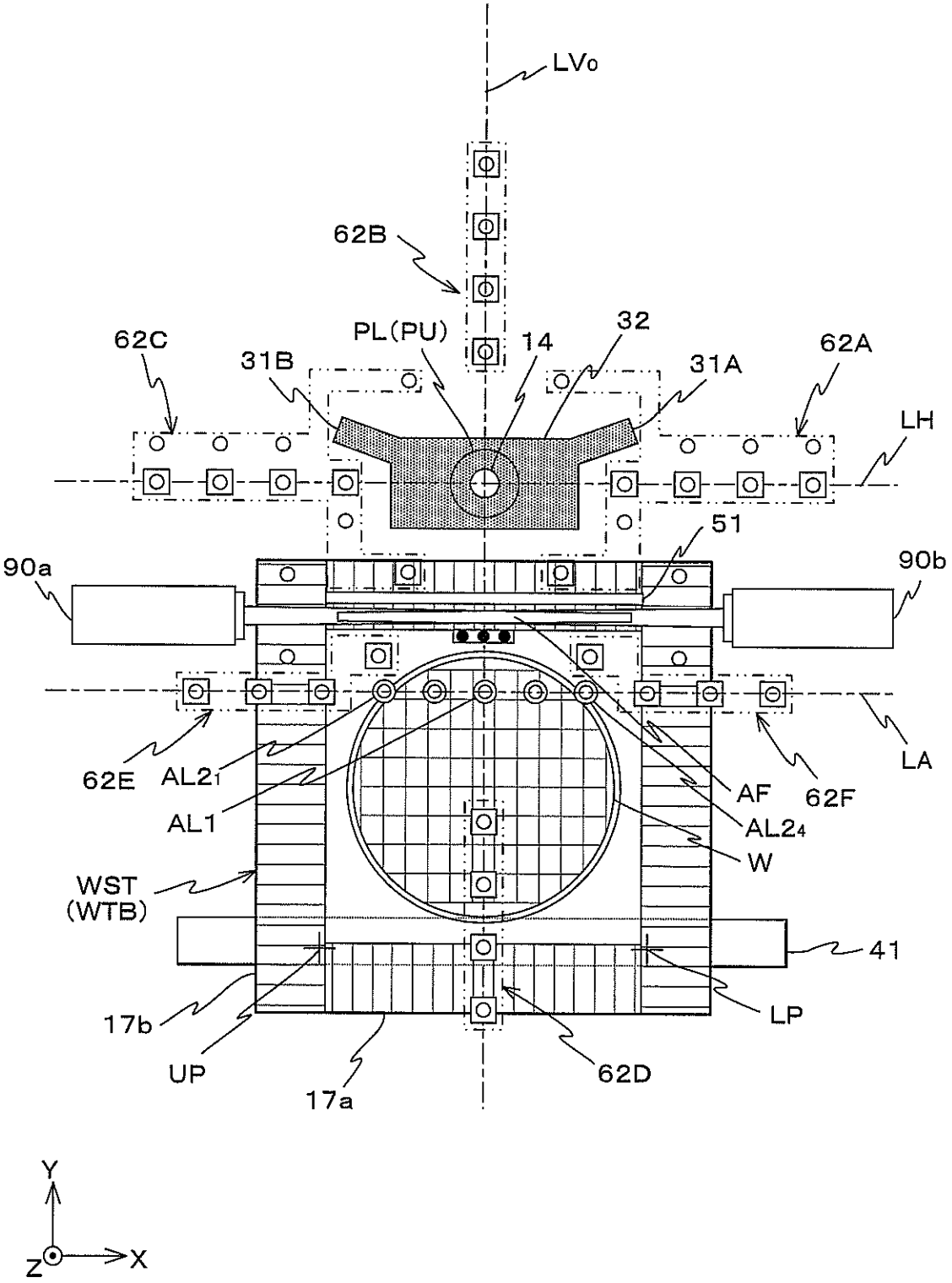
LV0
62B
62C
PL(PU)
14
32
62A
31B
31A
LH
51
90a
90b
62E
AL21
AL1
AF
62F
AL24
W
LA
WST
(WTB)
41
17b
LP
UP
17a
62D
Y
Z
X

Fig. 6

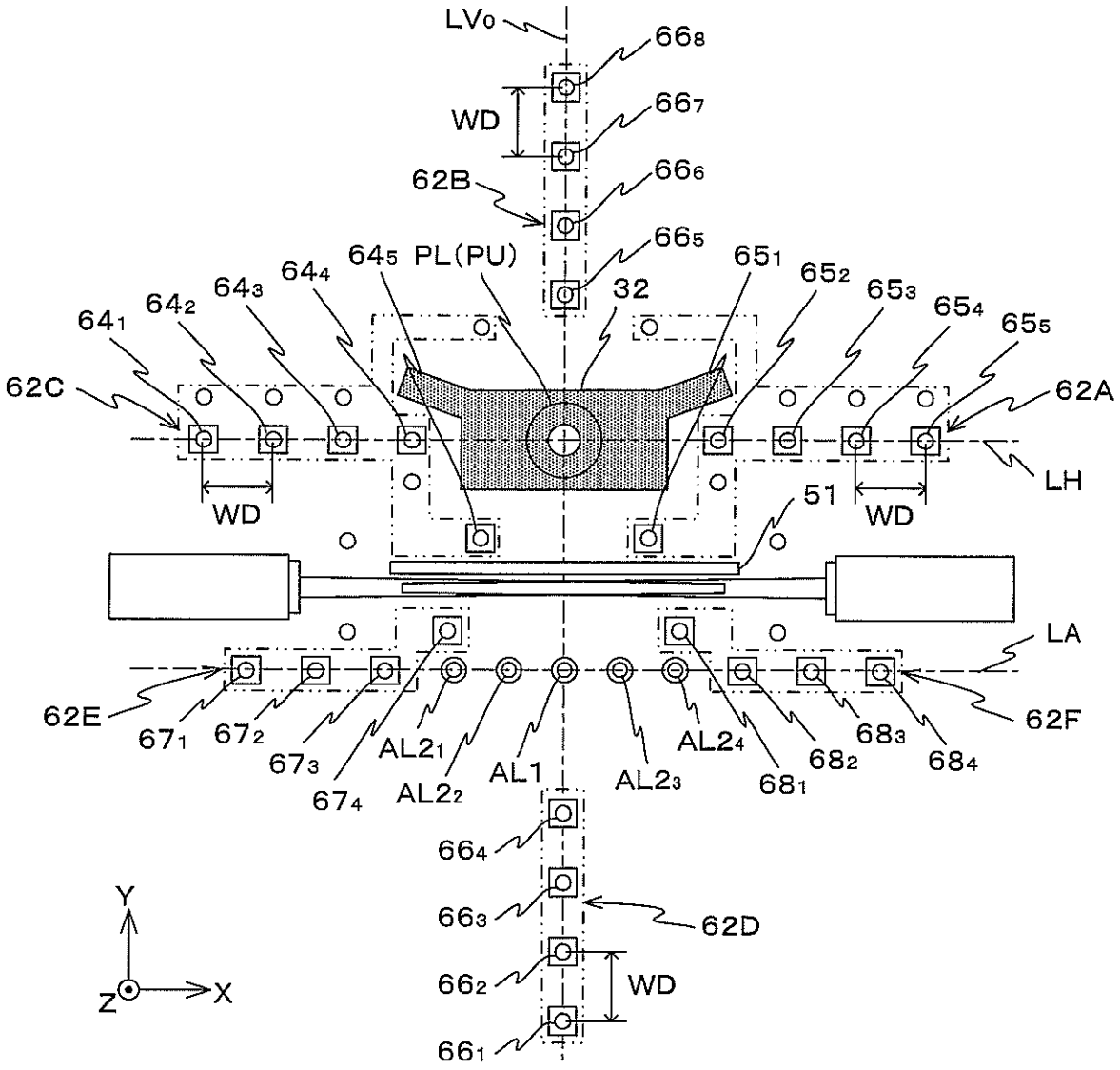
LV0
668
667
WD
62B
666
665
645
PL(PU)
644
643
642
641
32
651
652
653
654
655
62C
62A
LH
WD
WD
51
LA
62E
671
672
673
674
AL21
AL22
AL1
AL23
AL24
681
682
683
684
62F
664
663
662
661
62D
WD
Y
Z
X

Fig. 7

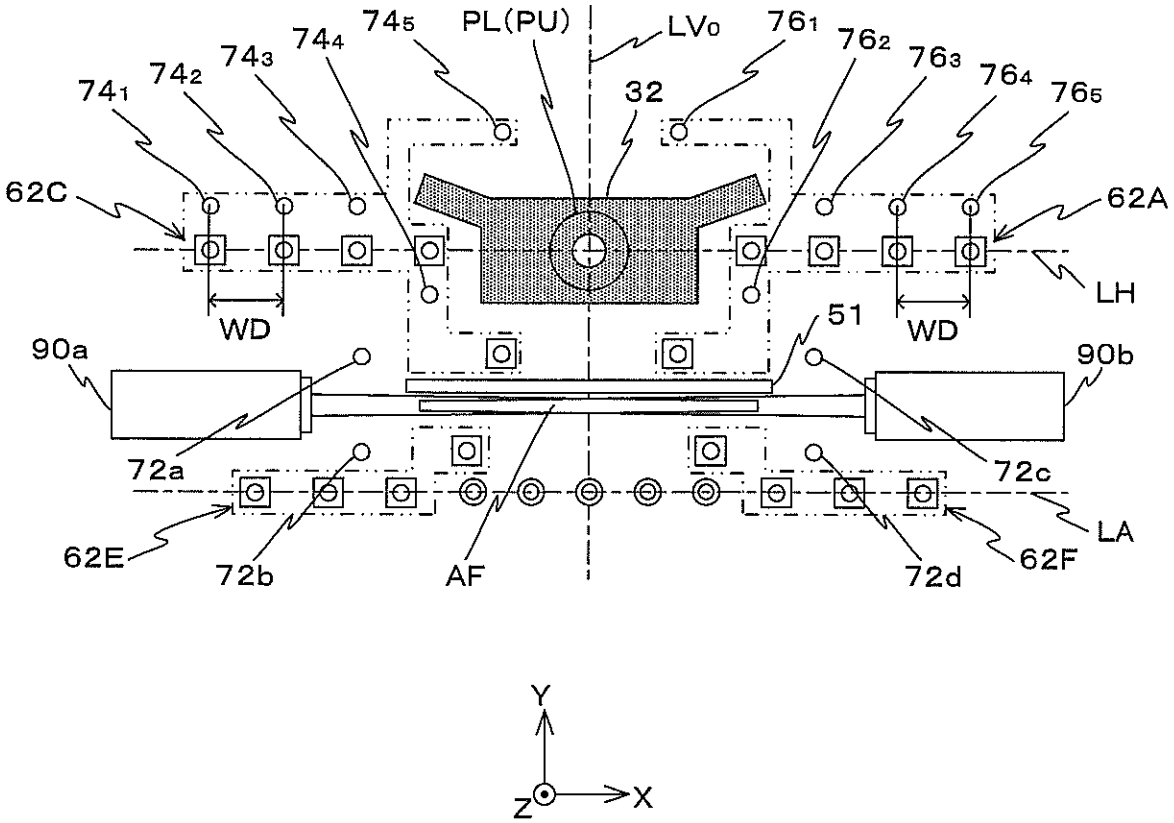
74₅
PL(PU)
LV₀
76₁
74₄
74₃
74₂
74₁
32
76₂
76₃
76₄
76₅
62C
62A
LH
WD
WD
51
90a
90b
72a
72c
62E
72b
AF
72d
62F
LA
Y
Z
X

Fig. 8

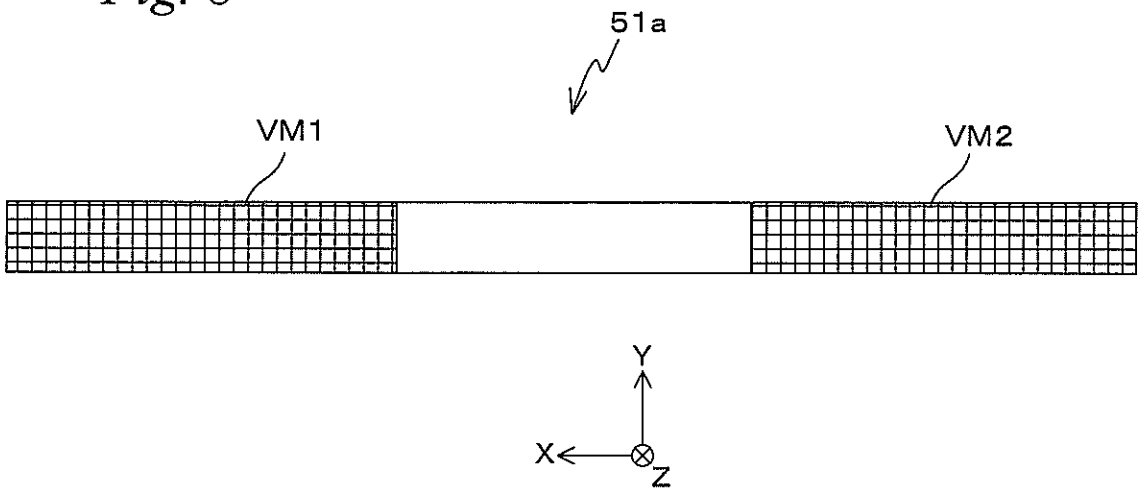

Fig. 9A

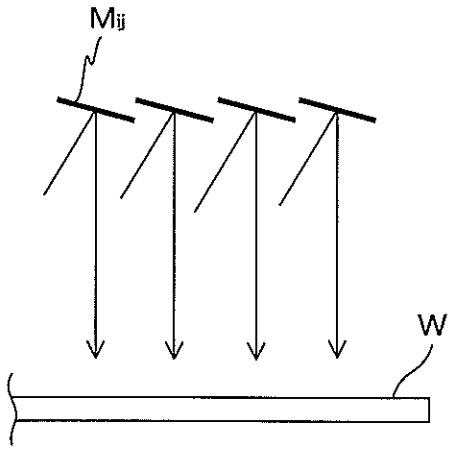

Fig. 9B

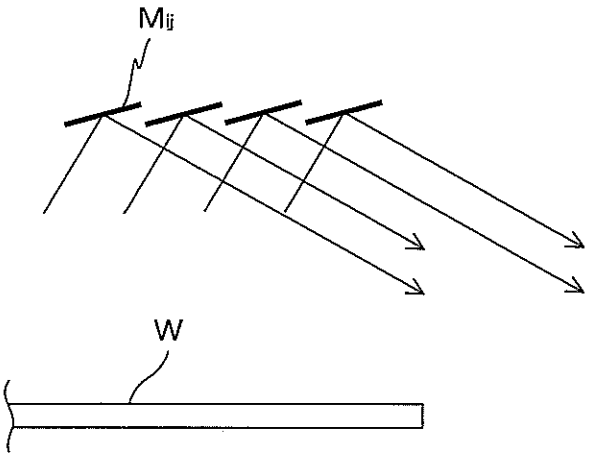

Fig. 10

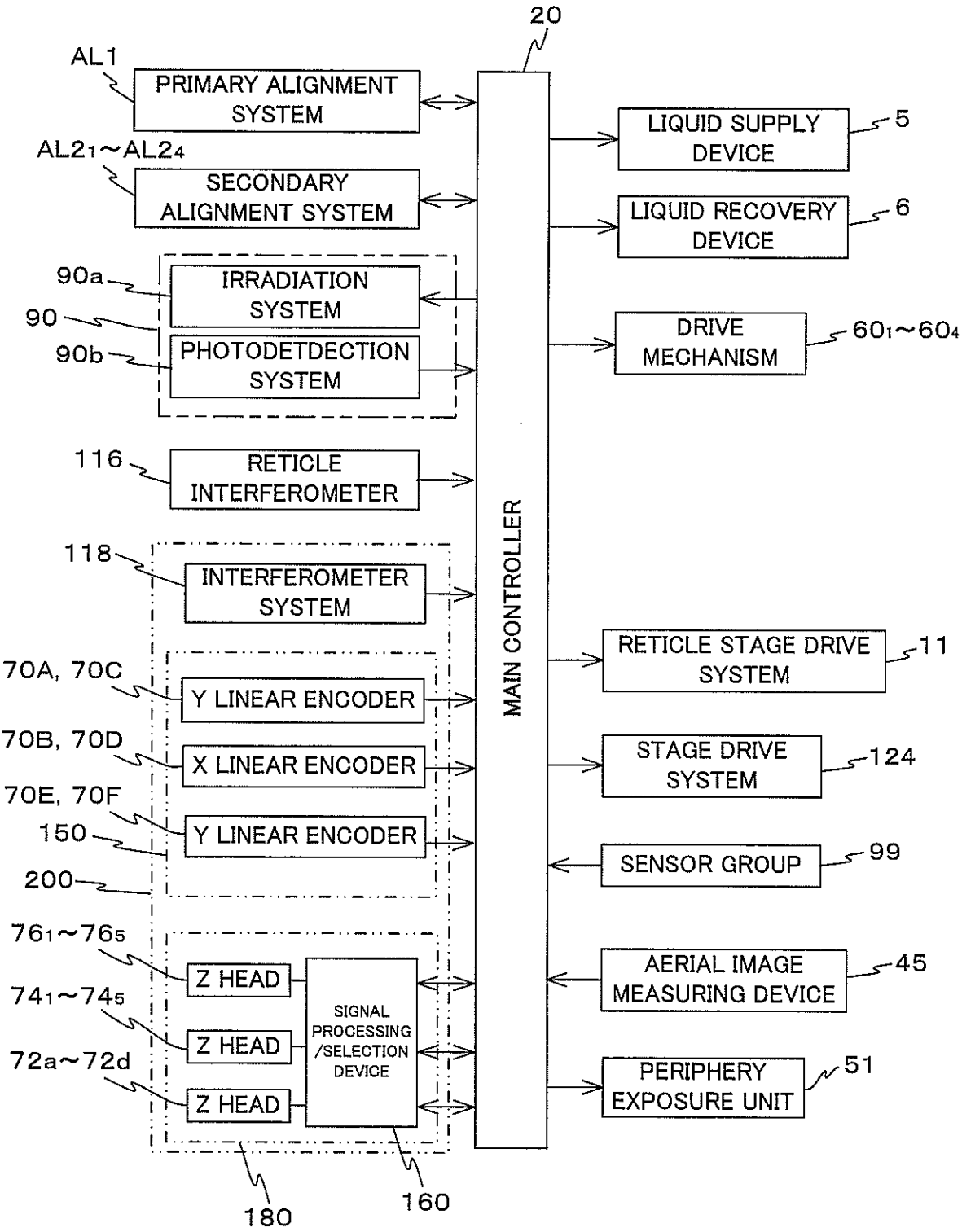
20
AL1
PRIMARY ALIGNMENT SYSTEM
AL2₁~AL2₄
SECONDARY ALIGNMENT SYSTEM
90a
IRRADIATION SYSTEM
90
90b
PHOTODETDECTION SYSTEM
116
RETICLE INTERFEROMETER
118
INTERFEROMETER SYSTEM
70A, 70C
Y LINEAR ENCODER
70B, 70D
X LINEAR ENCODER
70E, 70F
Y LINEAR ENCODER
150
200
76₁~76₅
Z HEAD
74₁~74₅
Z HEAD
72a~72d
Z HEAD
SIGNAL PROCESSING /SELECTION DEVICE
180
160
MAIN CONTROLLER
LIQUID SUPPLY DEVICE
5
LIQUID RECOVERY DEVICE
6
DRIVE MECHANISM
60₁~60₄
RETICLE STAGE DRIVE SYSTEM
11
STAGE DRIVE SYSTEM
124
SENSOR GROUP
99
AERIAL IMAGE MEASURING DEVICE
45
PERIPHERY EXPOSURE UNIT
51

Fig. 11

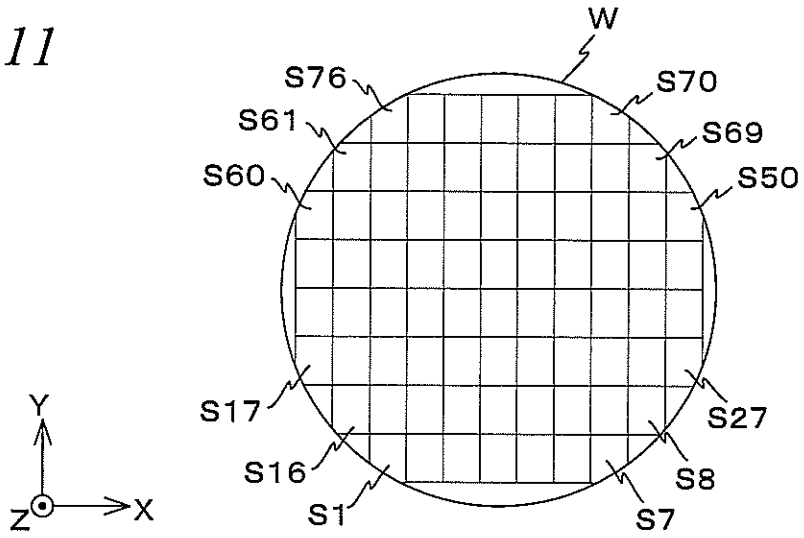

Fig. 12

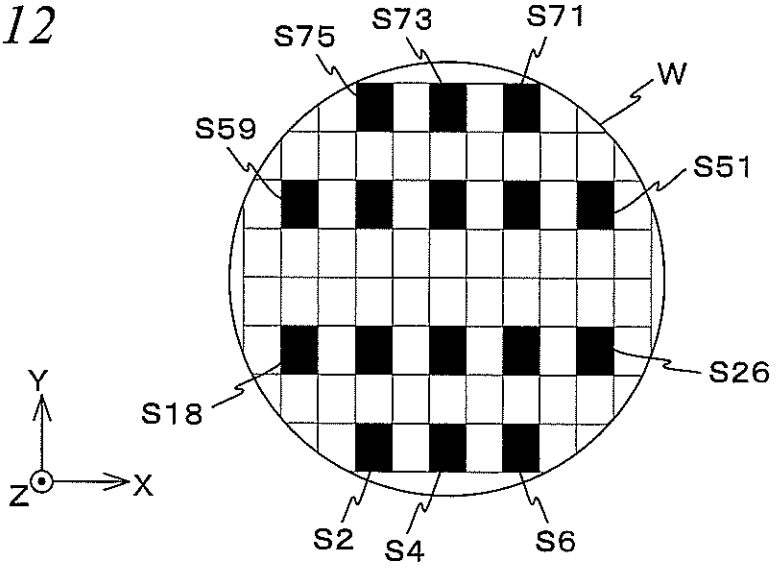

Fig. 13

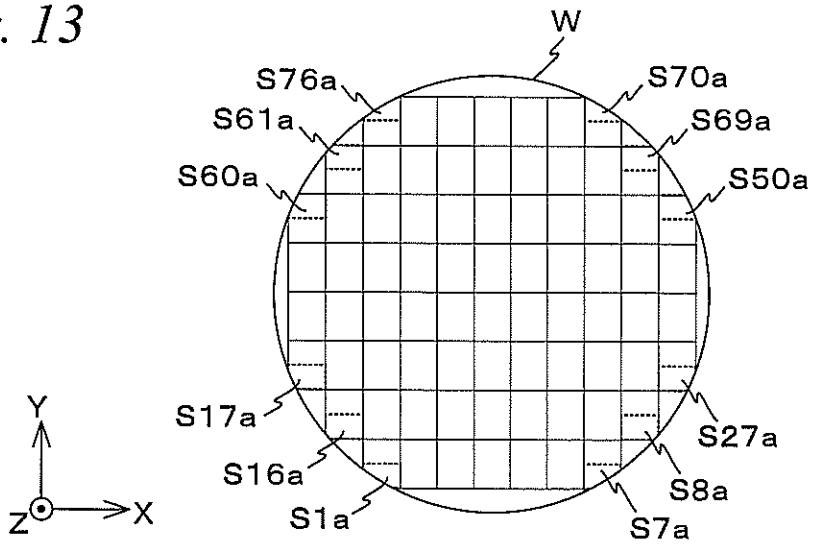

Fig. 14

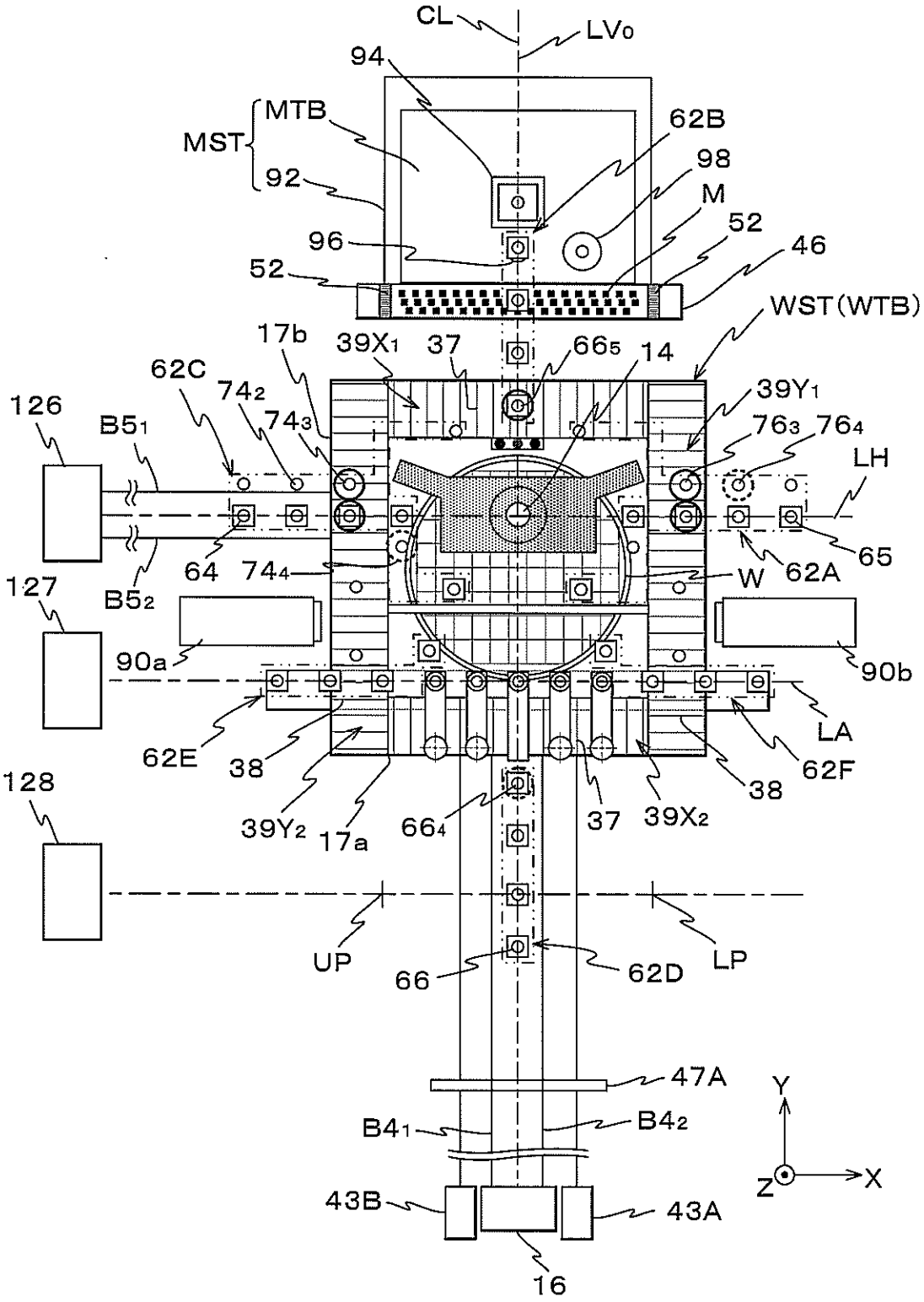
CL
LV0
94
MTB
MST
92
62B
98
M
96
52
46
52
WST(WTB)
17b
39X1
37
665
14
62C
742
743
39Y1
763
764
126
B51
LH
65
64
744
W
62A
127
B52
90a
90b
LA
62E
38
62F
38
128
39Y2
17a
664
37
39X2
UP
LP
66
62D
47A
B41
B42
Y
Z
X
43B
43A
16

Fig. 15

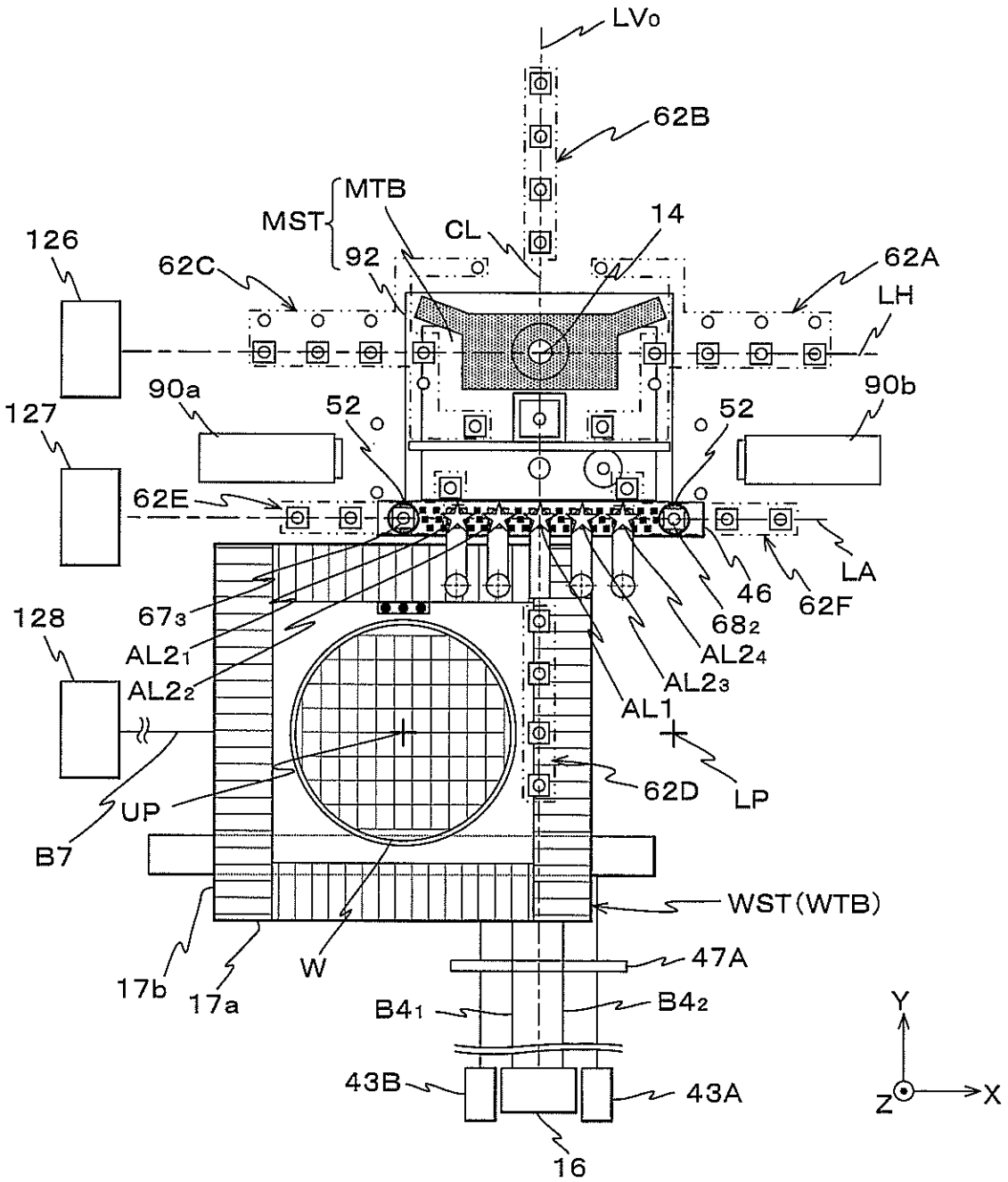
LV0
62B
MTB
MST
CL
14
126
62C
92
62A
LH
90a
52
52
90b
127
62E
LA
46
62F
128
67₃
AL2₁
AL2₂
68₂
AL2₄
AL2₃
AL1
62D
LP
UP
B7
WST(WTB)
W
47A
17b
17a
B4₁
B4₂
43B
43A
16
Y
Z
X

Fig. 16

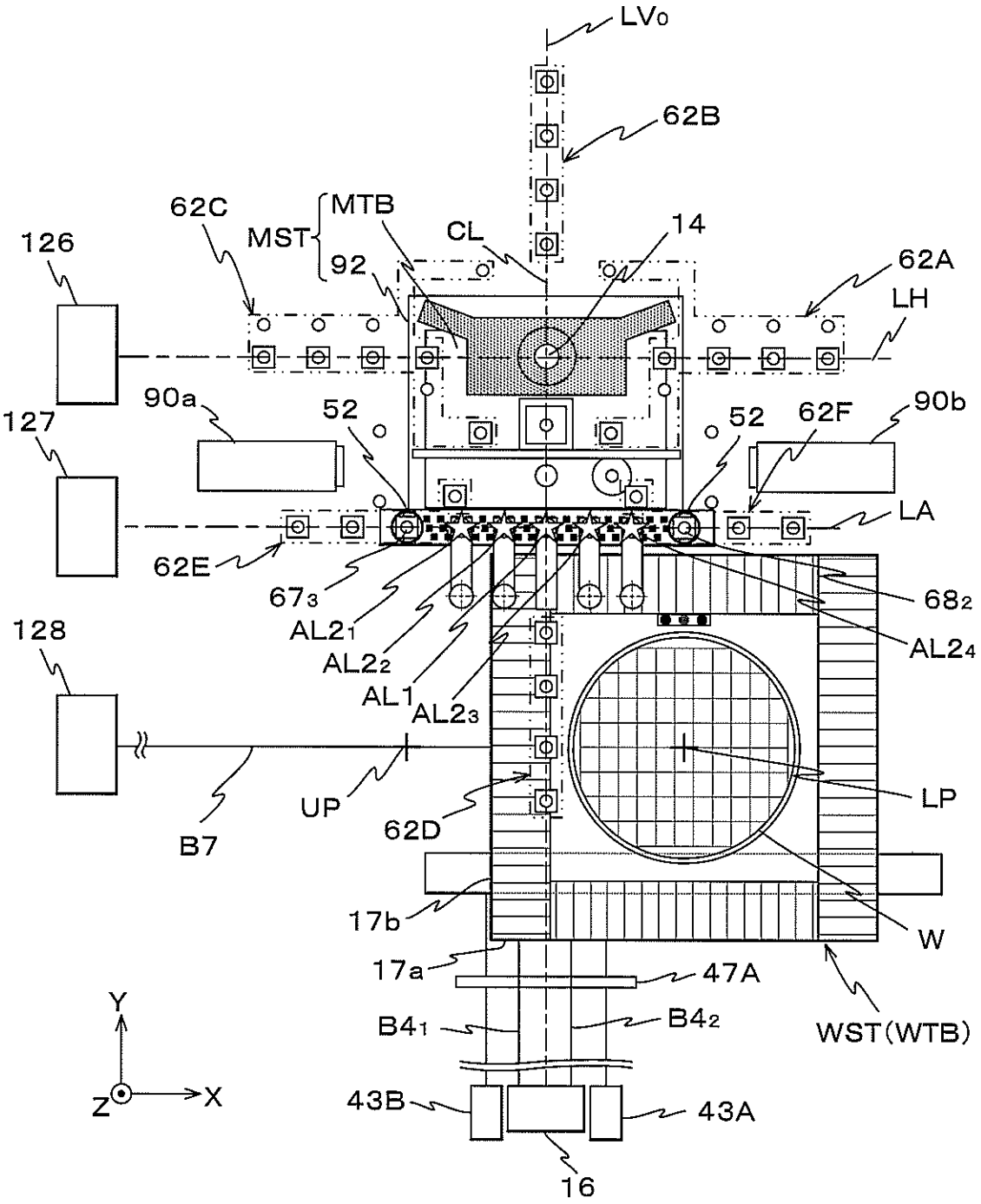
LV0
62B
62C
MTB
MST
92
CL
14
126
62A
LH
90a
52
52
62F
90b
127
LA
62E
67₃
AL2₁
AL2₂
AL1
AL2₃
68₂
AL2₄
128
UP
62D
LP
B7
17b
W
17a
47A
B4₁
B4₂
WST(WTB)
Y
Z
X
43B
43A
16

Fig. 17

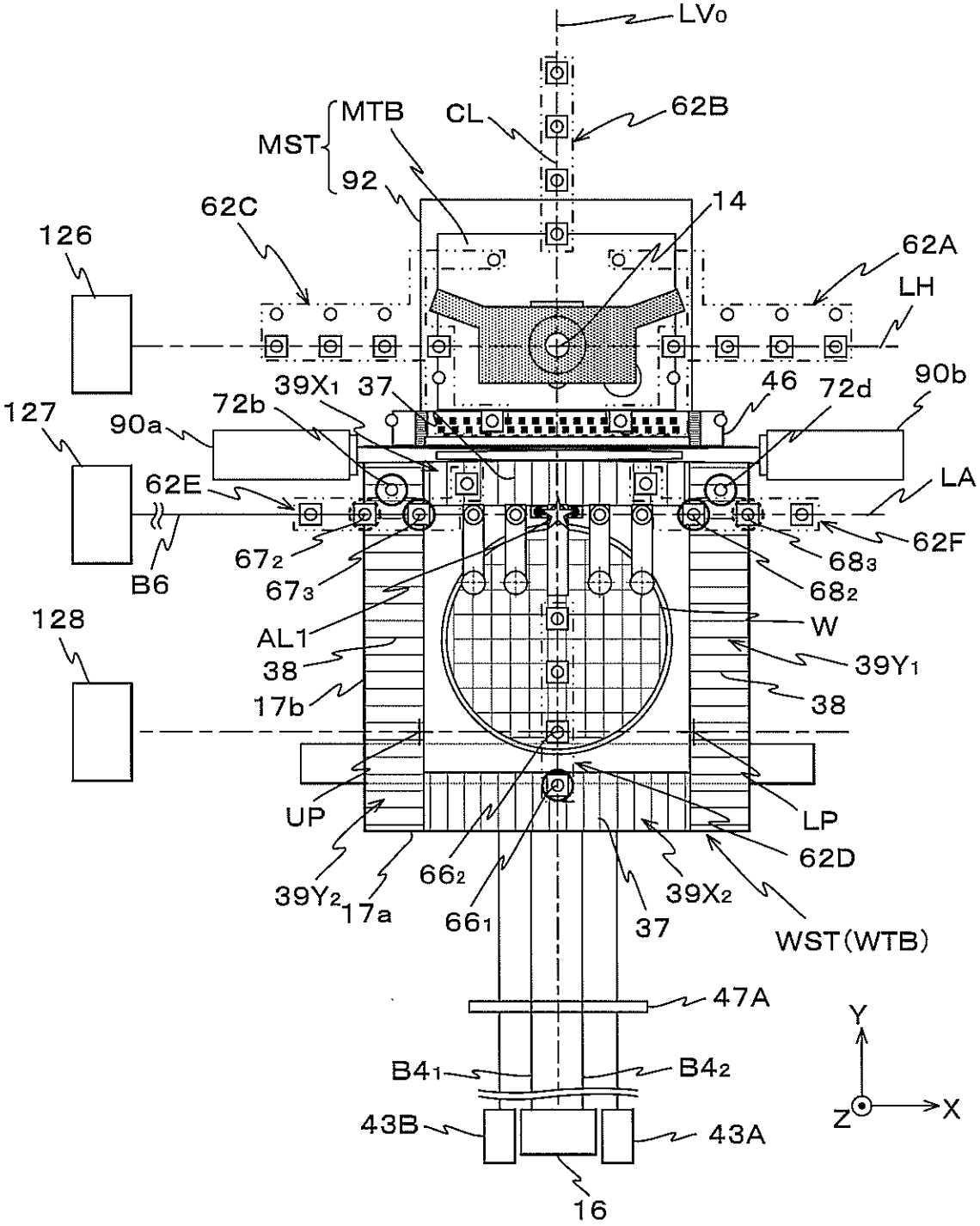
LV0
MST
MTB
CL
62B
92
14
62C
126
62A
LH
39X1
37
46
72d
90b
127
72b
90a
62E
LA
62F
67₂
68₃
B6
67₃
68₂
128
AL1
W
38
39Y1
17b
38
UP
LP
62D
39Y2
17a
66₂
66₁
37
39X2
WST(WTB)
47A
Y
B41
B42
Z
X
43B
43A
16

Fig. 18

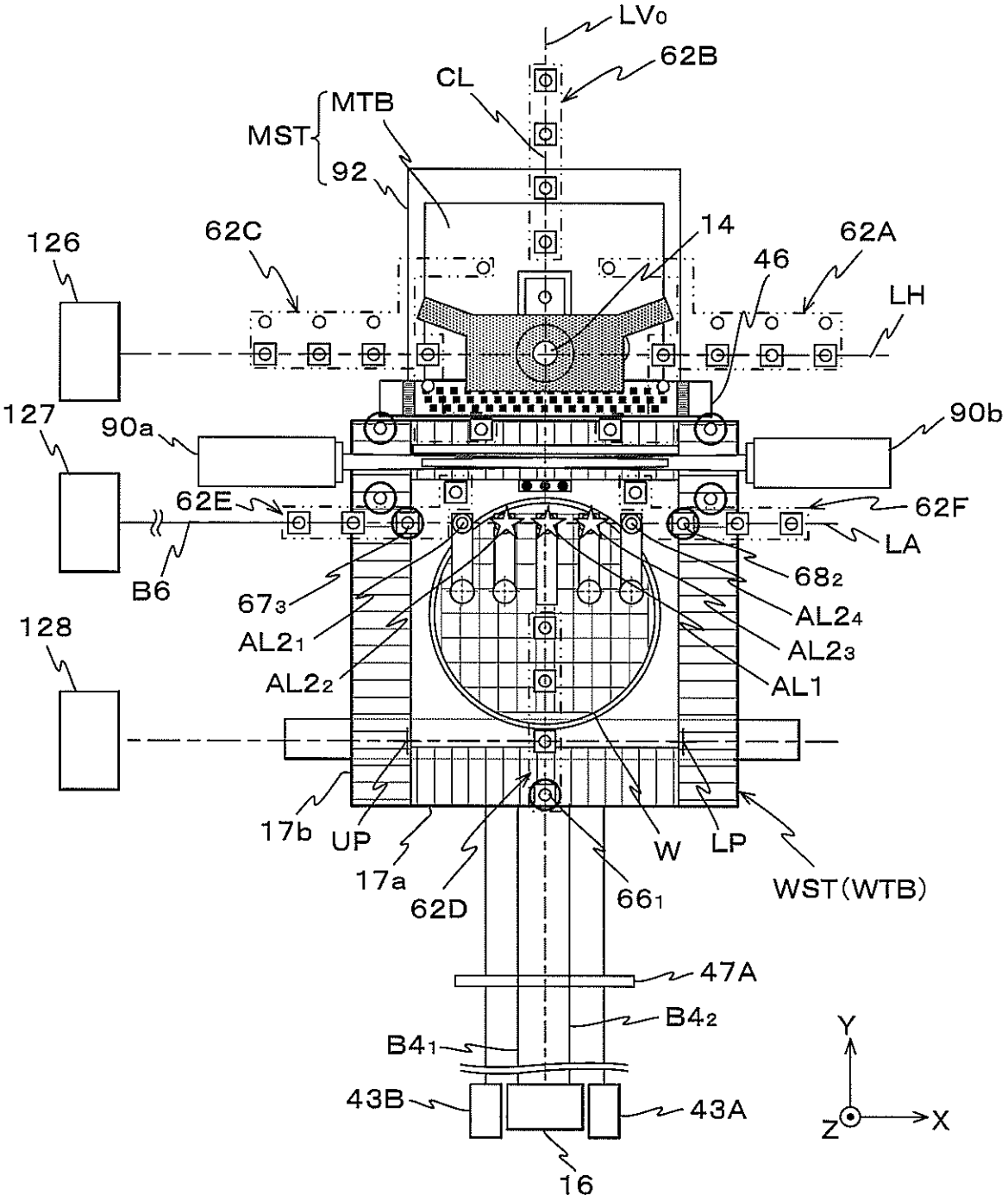
LV0
62B
CL
MST
MTB
92
126
62C
14
62A
46
LH
127
90a
90b
62E
62F
LA
B6
68₂
67₃
AL2₄
AL2₁
AL2₃
AL2₂
AL1
128
17b
UP
W
LP
17a
62D
66₁
WST(WTB)
47A
B4₂
B4₁
43B
43A
16
Y
Z
X

Fig. 19

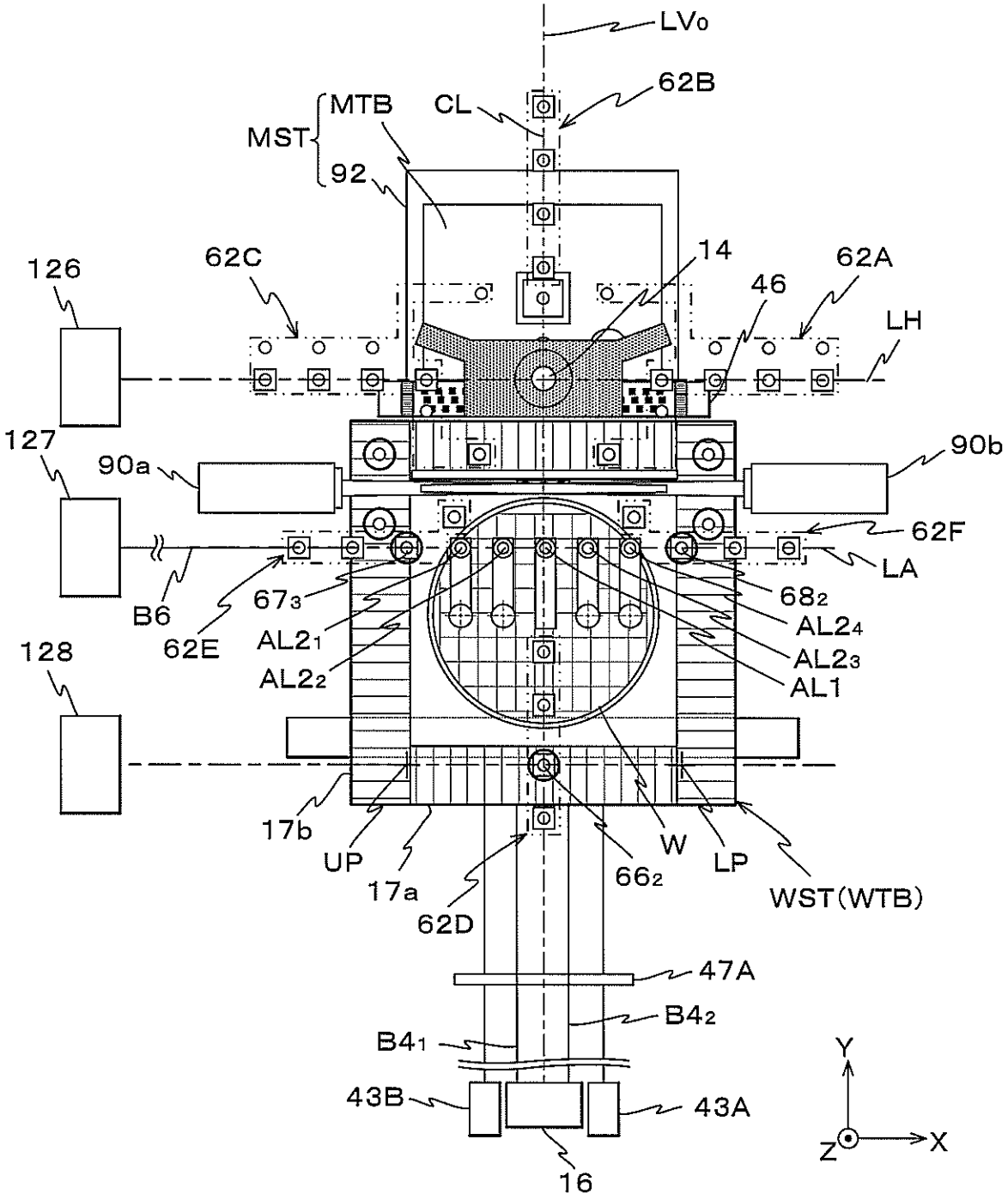
LV0
62B
MST
MTB
CL
92
14
62A
46
62C
126
LH
127
90a
90b
62F
LA
B6
62E
67₃
AL2₁
AL2₂
68₂
AL2₄
AL2₃
AL1
128
17b
UP
17a
62D
W
66₂
LP
WST(WTB)
47A
B4₂
B4₁
43B
43A
16
Y
Z
X

Fig. 20

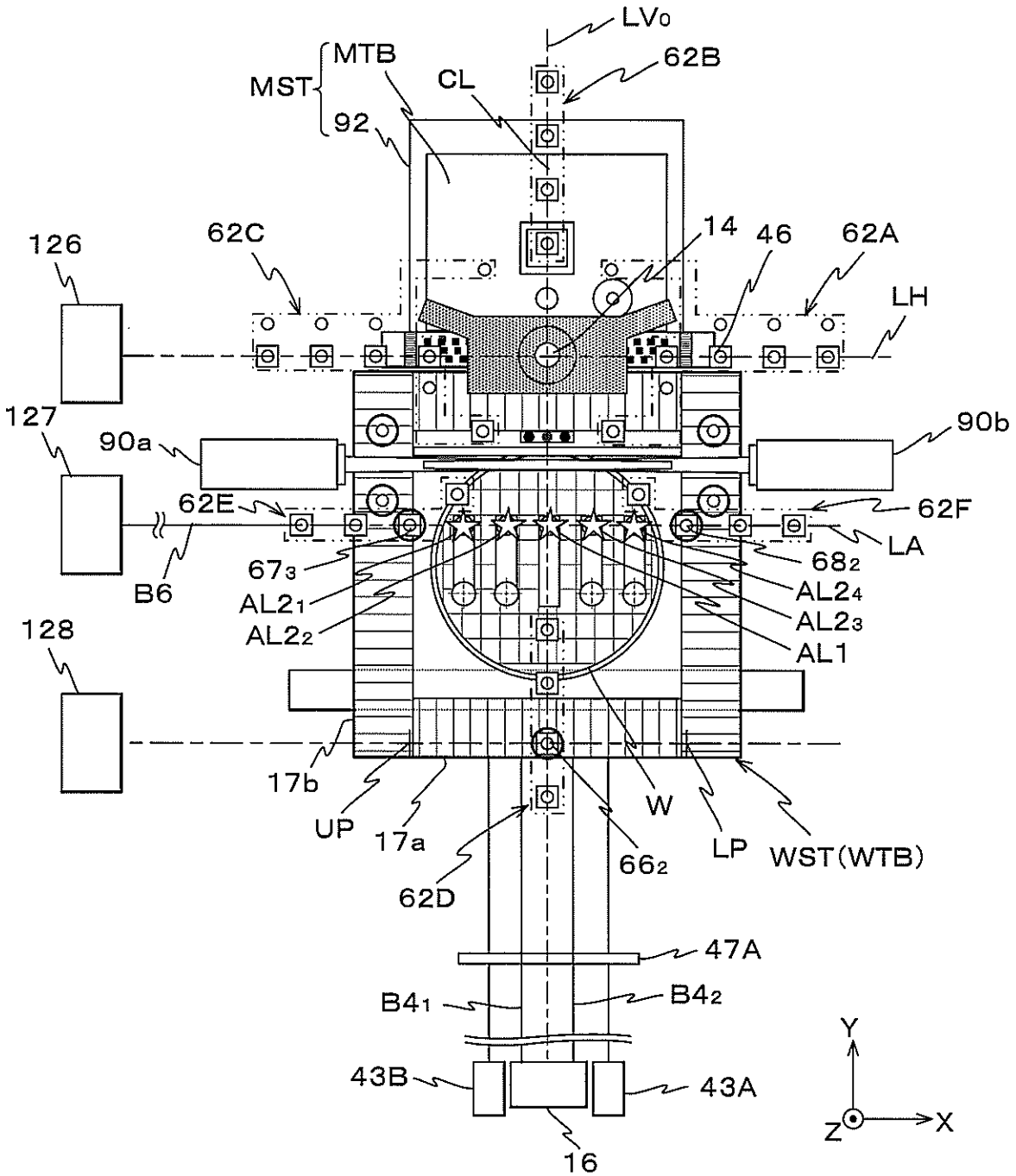
LV0
MTB
MST
92
CL
62B
126
62C
14
46
62A
LH
127
90a
90b
62E
62F
LA
B6
67₃
AL2₁
AL2₂
68₂
AL2₄
AL2₃
AL1
128
17b
UP
17a
W
LP
WST(WTB)
66₂
62D
47A
B4₁
B4₂
43B
43A
16
Y
X
Z

Fig. 21

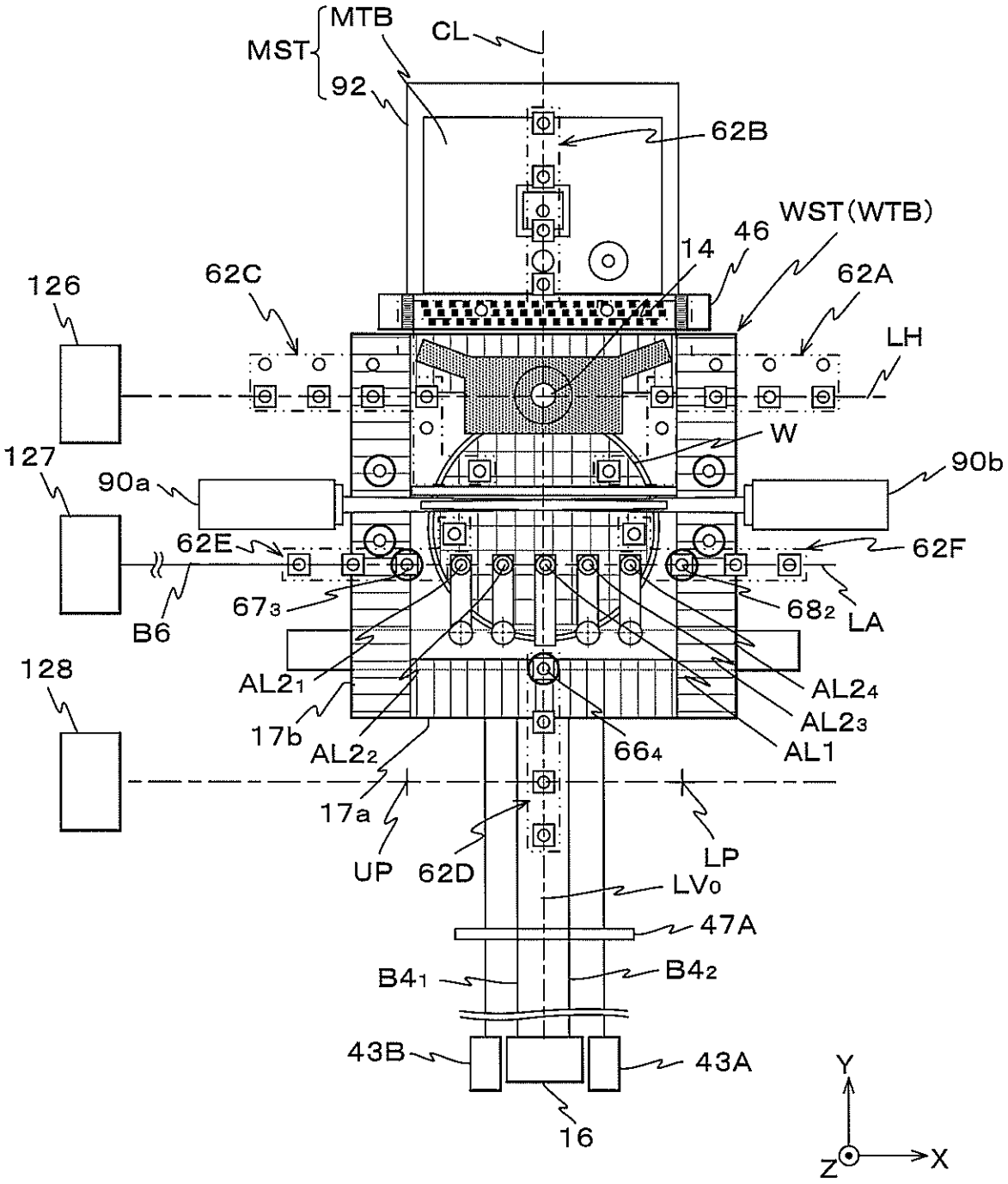
MTB
MST
92
CL
62B
WST(WTB)
46
14
62C
62A
126
LH
W
127
90a
90b
62E
62F
B6
67₃
68₂
LA
128
AL2₁
AL2₄
AL2₃
17b
AL2₂
66₄
AL1
17a
UP
62D
LP
LV₀
47A
B4₁
B4₂
43B
43A
16
Y
Z
X

Fig. 22

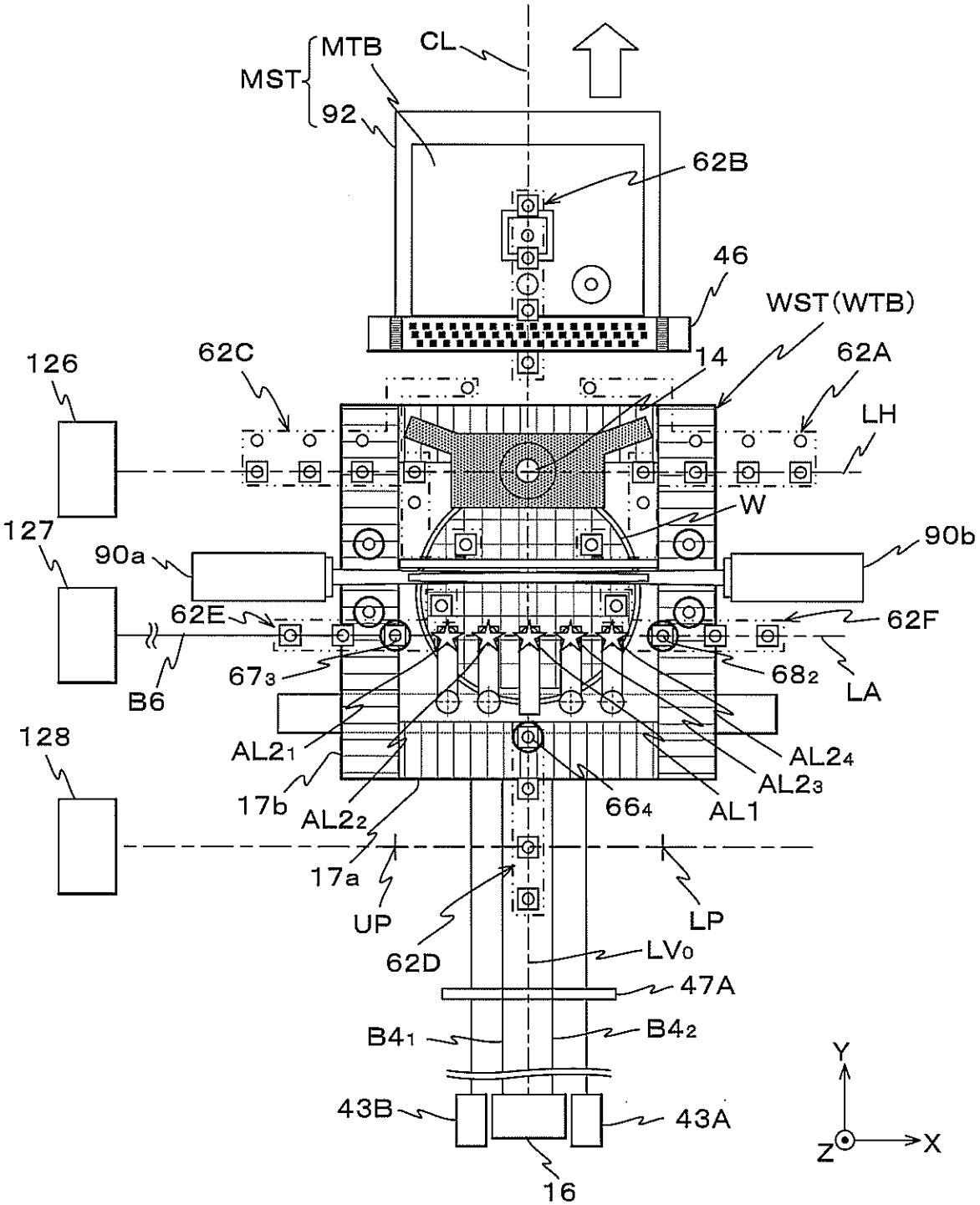
MST
MTB
92
CL
62B
46
WST(WTB)
62C
14
62A
126
LH
W
127
90a
90b
62E
62F
B6
67₃
68₂
LA
128
AL2₁
AL2₄
AL2₃
17b
AL2₂
66₄
AL1
17a
UP
LP
62D
LV₀
47A
B4₁
B4₂
43B
43A
16
Y
Z
X

Fig. 23

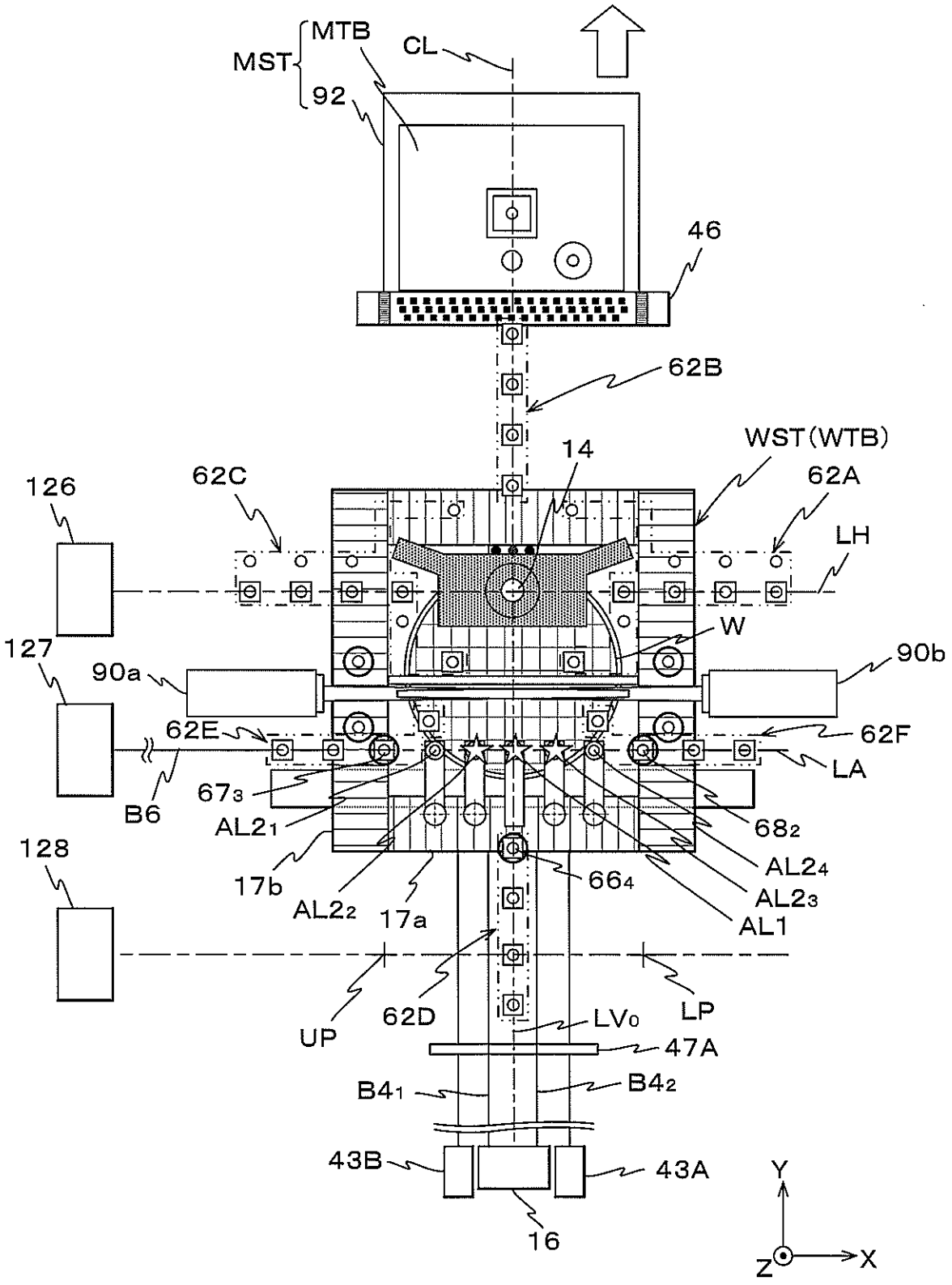
MST
MTB
92
CL
46
62B
WST(WTB)
14
62C
62A
126
LH
W
127
90a
90b
62E
62F
LA
B6
67₃
AL2₁
68₂
128
17b
AL2₂
17a
66₄
AL2₄
AL2₃
AL1
UP
62D
LP
LV₀
47A
B4₁
B4₂
43B
43A
16
Y
Z
X

Fig. 24

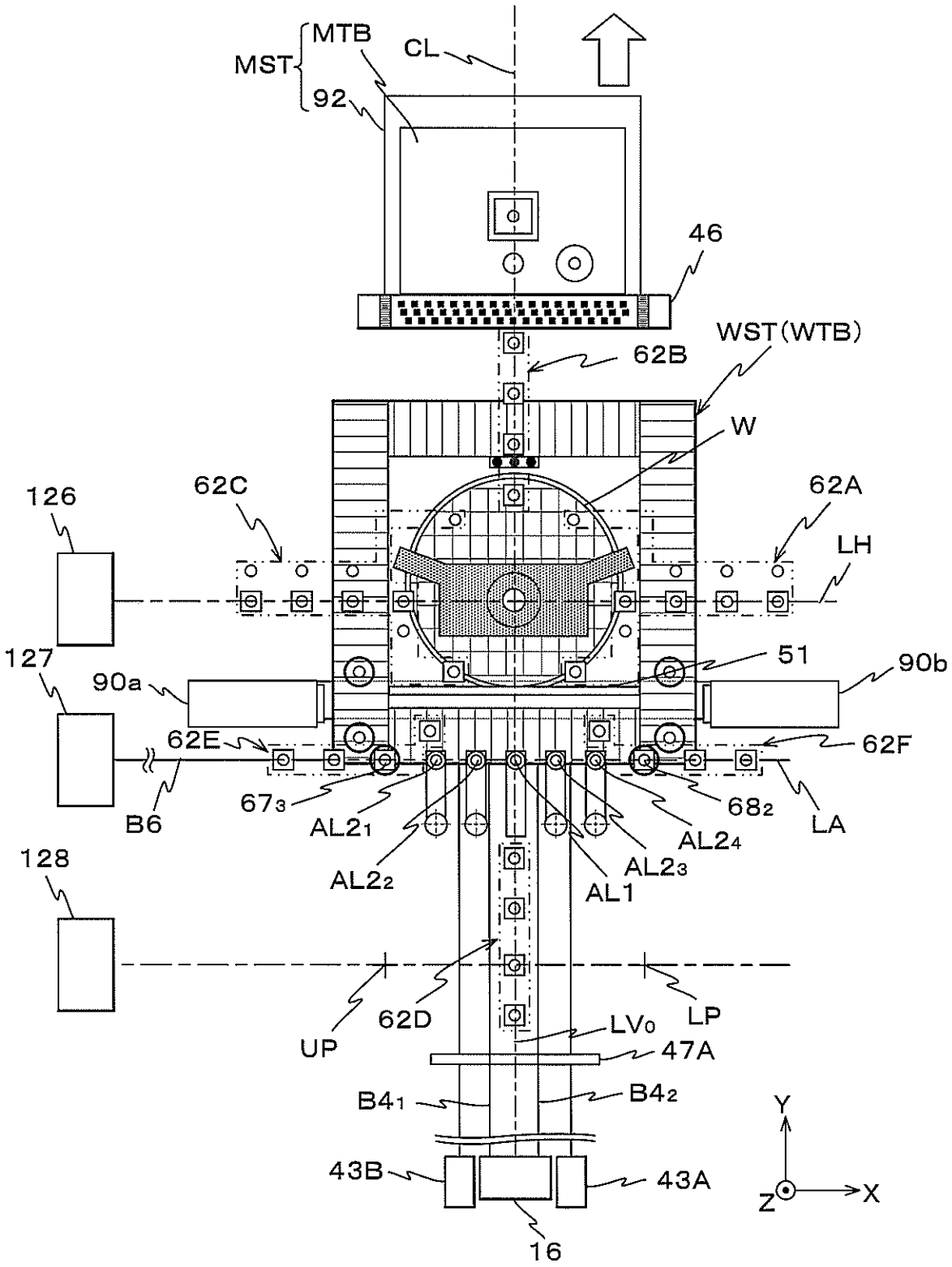
MST
MTB
92
CL
46
WST(WTB)
62B
W
62C
62A
126
LH
127
51
90b
90a
62E
62F
B6
67₃
AL2₁
AL2₂
AL1
AL2₃
AL2₄
68₂
LA
128
UP
62D
LP
LV₀
47A
B4₁
B4₂
43B
43A
16
Y
X
Z

Fig. 25A

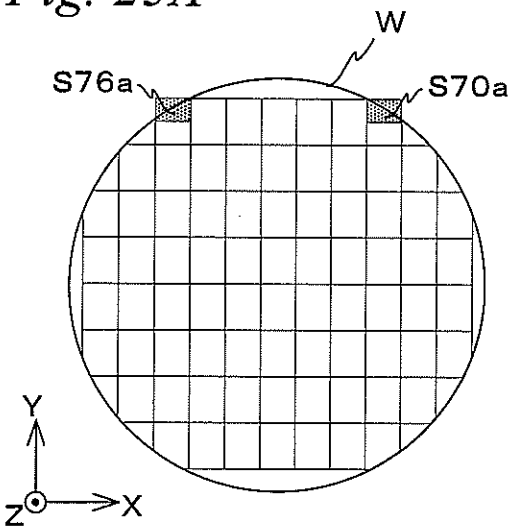

Fig. 25B

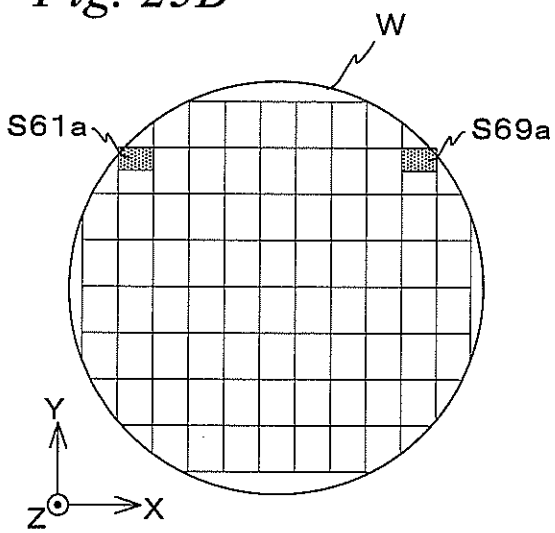

Fig. 25C

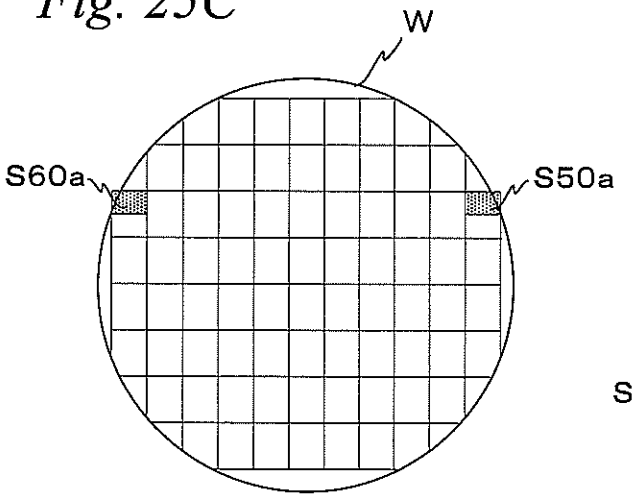

Fig. 25D

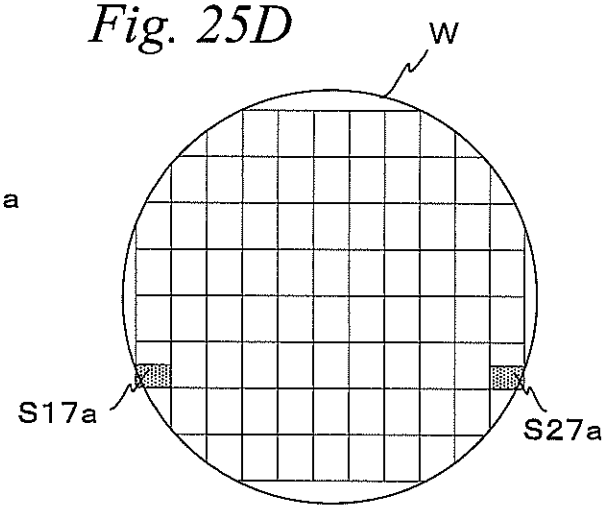

Fig. 25E

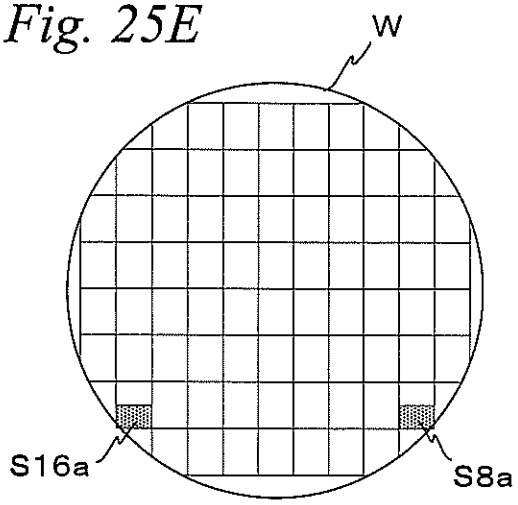

Fig. 25F

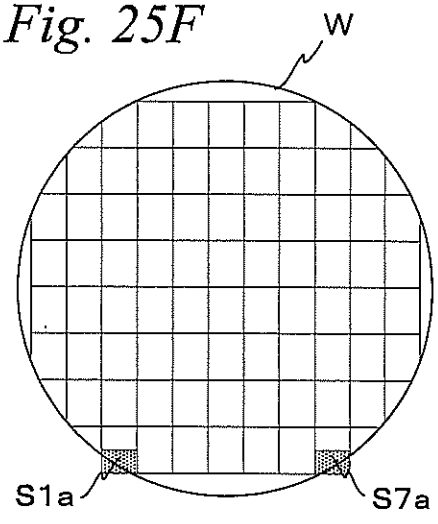

Fig. 26

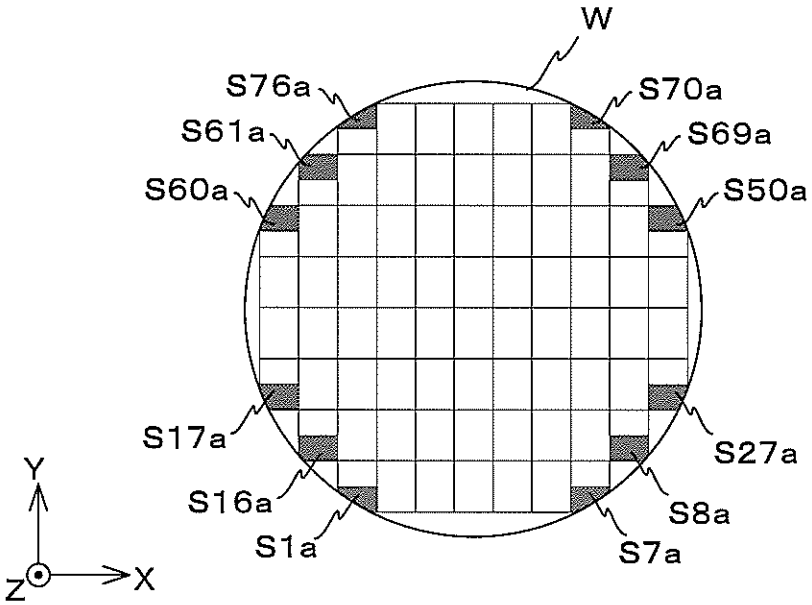

Fig. 27

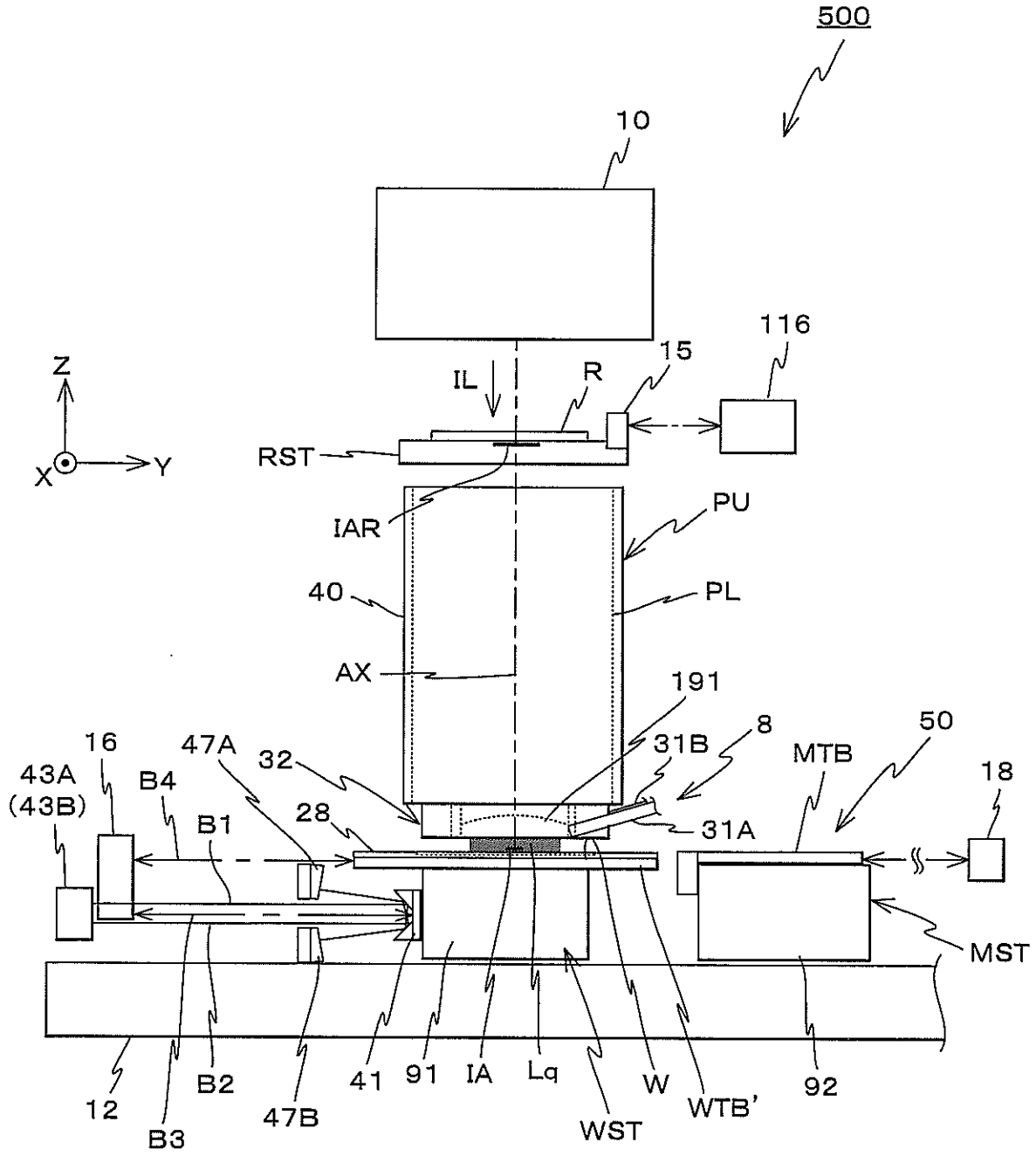
500
10
116
15
IL
R
Z
X
Y
RST
IAR
PU
PL
40
AX
191
8
50
MTB
18
16
47A
32
31B
43A
(43B)
B4
B1
28
31A
MST
12
B3
B2
47B
41
91
IA
Lq
W
WTB'
92
WST

Fig. 28

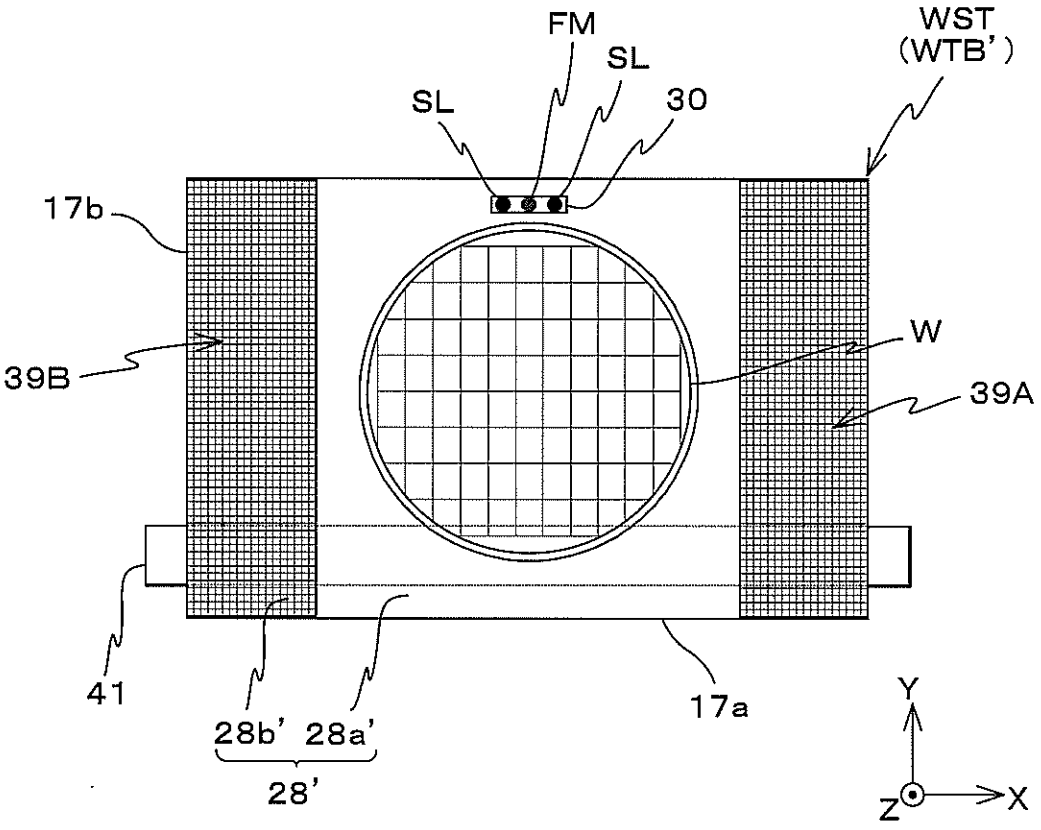

Fig. 29

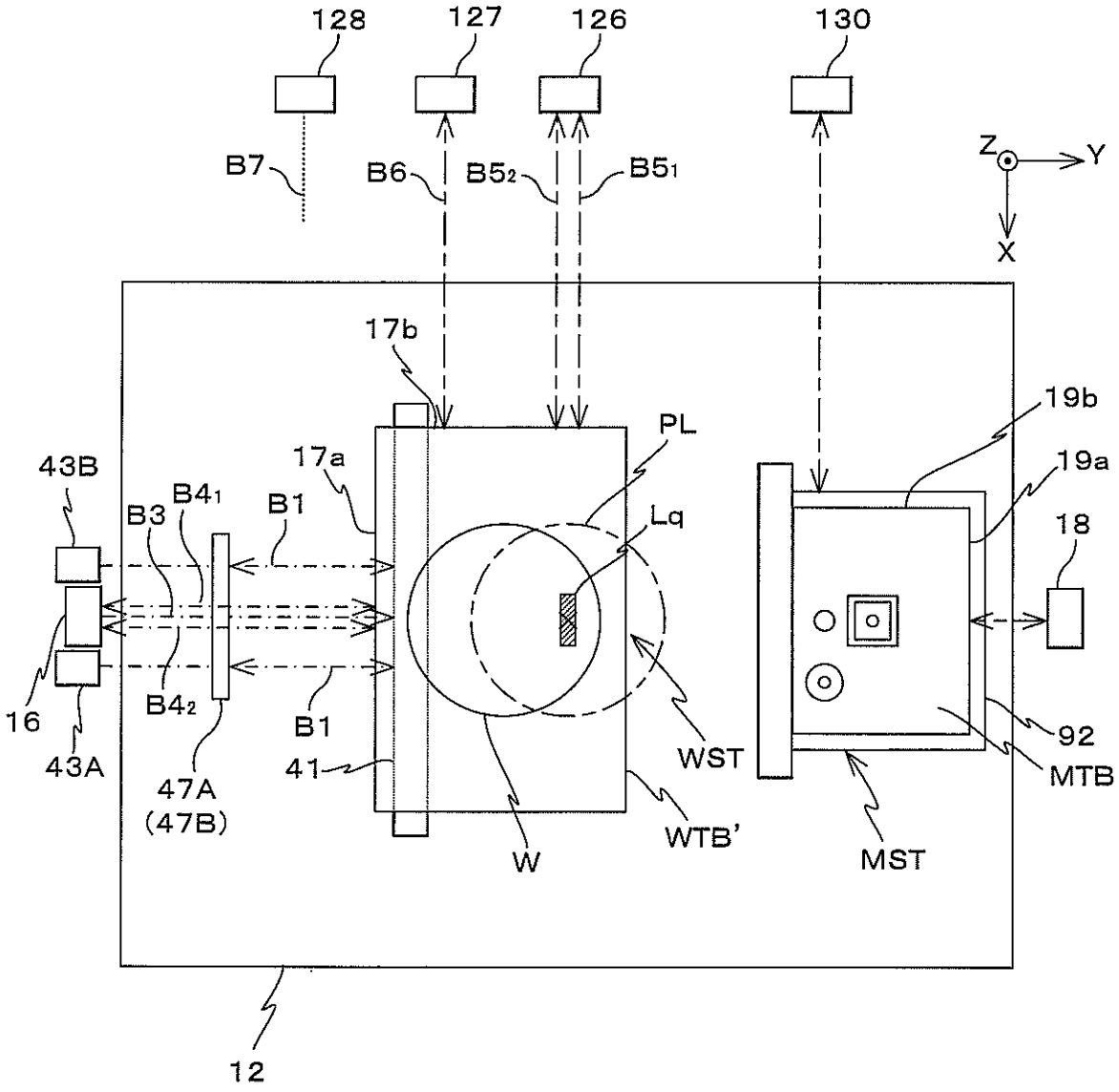
128
127
126
130
B7
B6
B5₂
B5₁
Z
Y
X
17b
19b
PL
17a
19a
43B
B4₁
B3
B1
Lq
18
16
B4₂
B1
WST
92
43A
47A
(47B)
41
MTB
W
WTB'
MST
12

Fig. 30

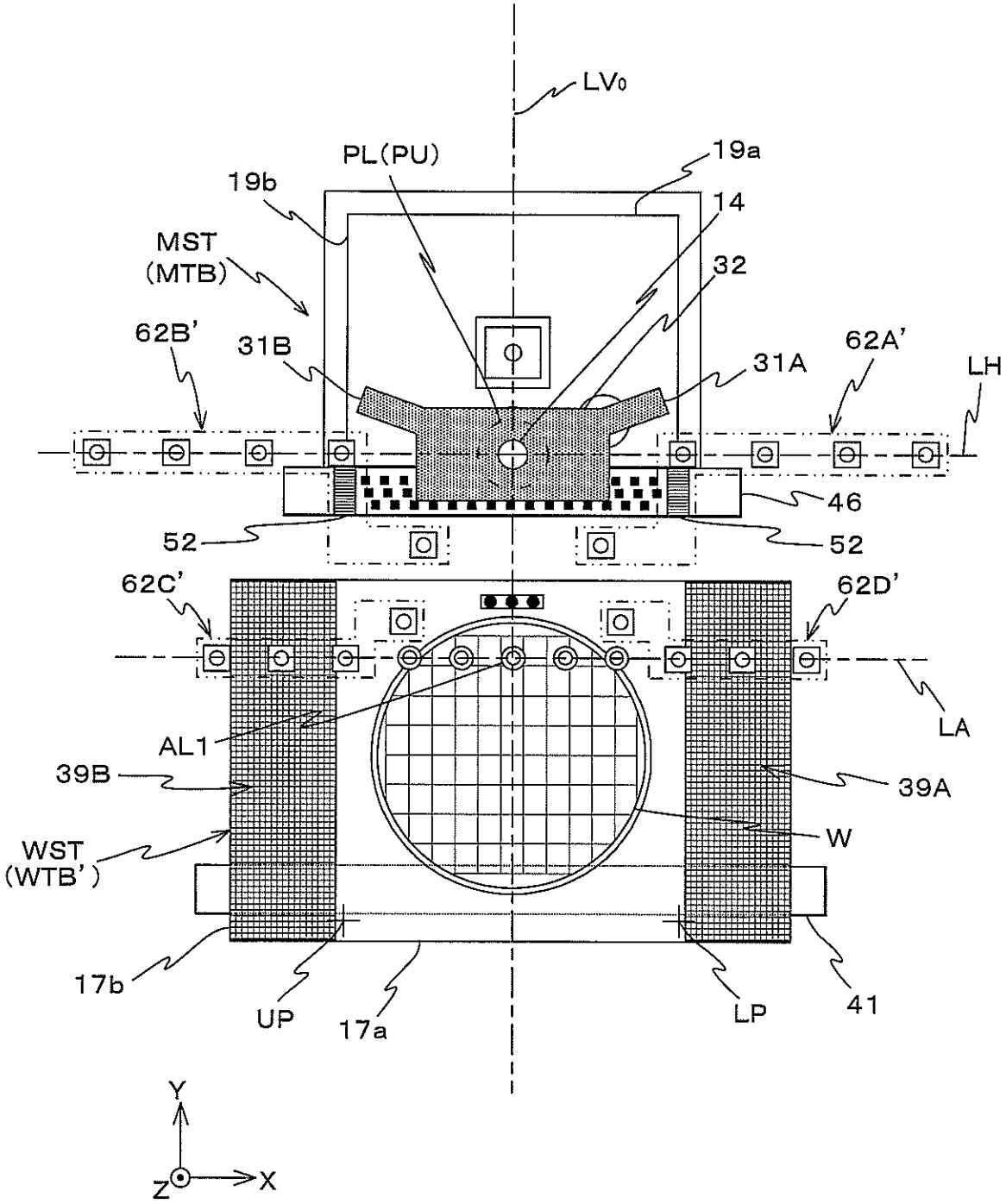
LV0
PL(PU)
19a
19b
14
MST
(MTB)
32
62B'
31B
31A
62A'
LH
46
52
52
62C'
62D'
LA
AL1
39B
39A
W
WST
(WTB')
17b
UP
17a
LP
41
Y
Z
X

Fig. 31

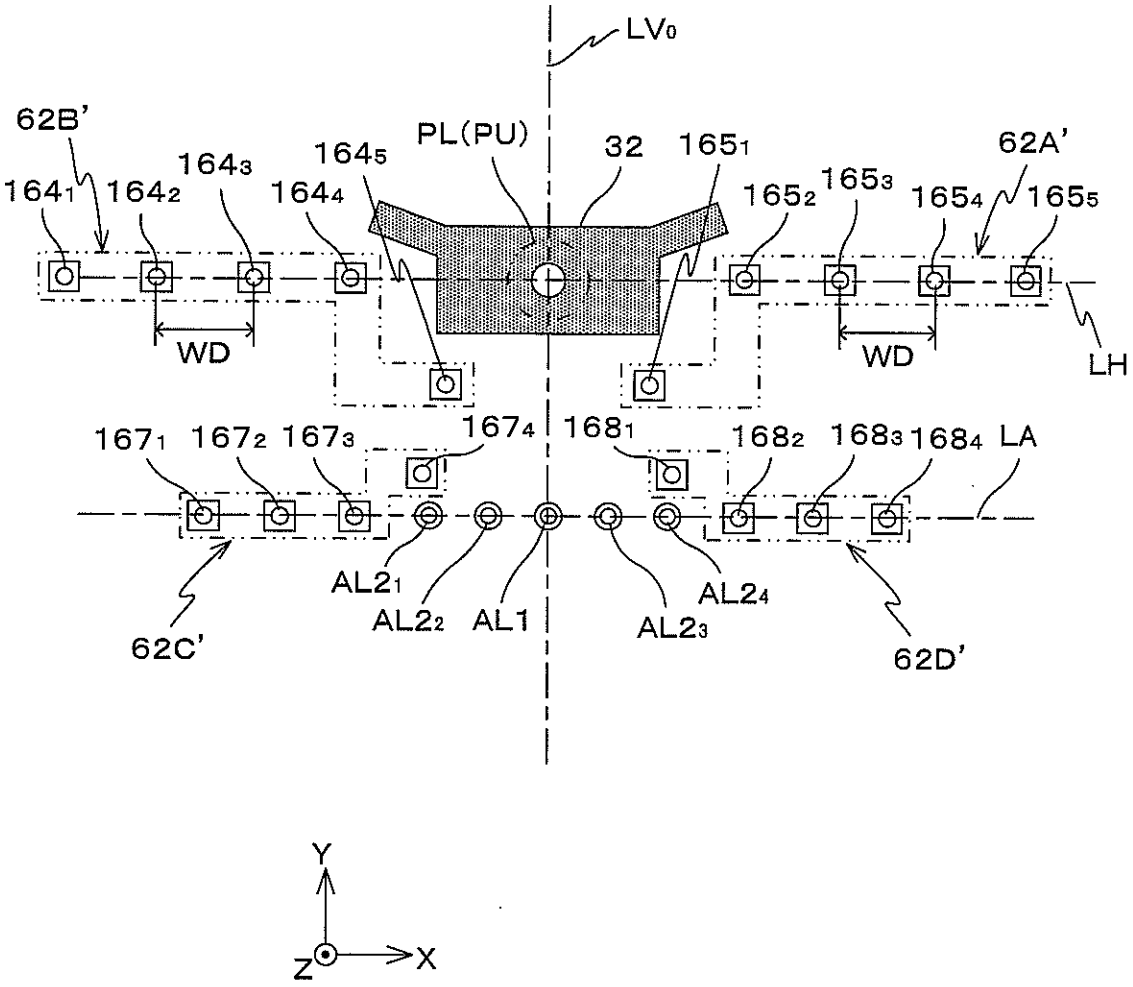
LV0
62B'
164₁
164₂
164₃
164₄
164₅
PL(PU)
32
165₁
165₂
165₃
165₄
165₅
62A'
WD
WD
LH
167₁
167₂
167₃
167₄
168₁
168₂
168₃
168₄
LA
AL2₁
AL2₂
AL1
AL2₃
AL2₄
62C'
62D'
Y
Z
X

Fig. 32

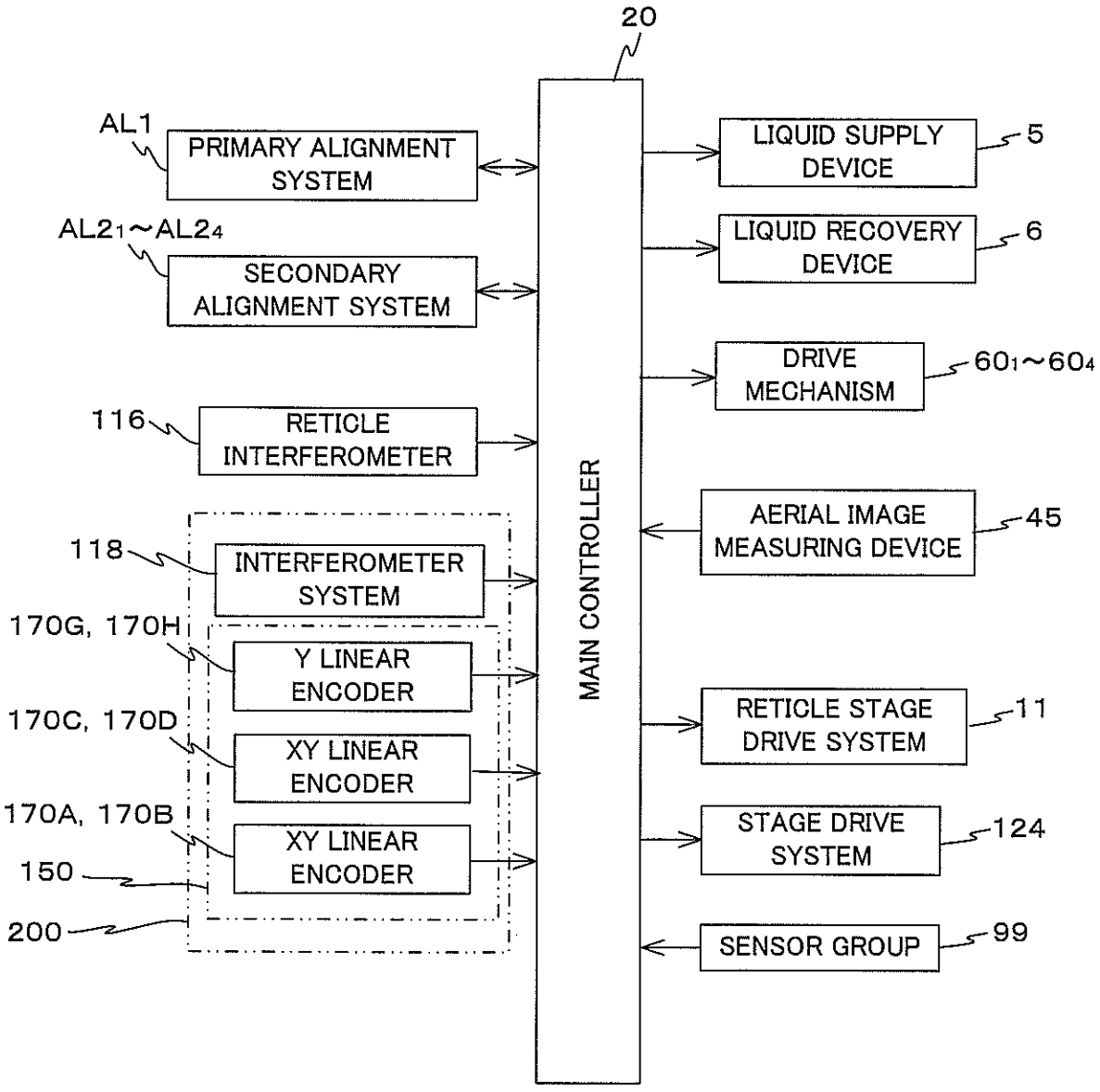
20
AL1
PRIMARY ALIGNMENT SYSTEM
AL2₁～AL2₄
SECONDARY ALIGNMENT SYSTEM
116
RETICLE INTERFEROMETER
118
INTERFEROMETER SYSTEM
170G, 170H
Y LINEAR ENCODER
170C, 170D
XY LINEAR ENCODER
170A, 170B
XY LINEAR ENCODER
150
200
MAIN CONTROLLER
LIQUID SUPPLY DEVICE
5
LIQUID RECOVERY DEVICE
6
DRIVE MECHANISM
60₁～60₄
AERIAL IMAGE MEASURING DEVICE
45
RETICLE STAGE DRIVE SYSTEM
11
STAGE DRIVE SYSTEM
124
SENSOR GROUP
99

Fig. 33

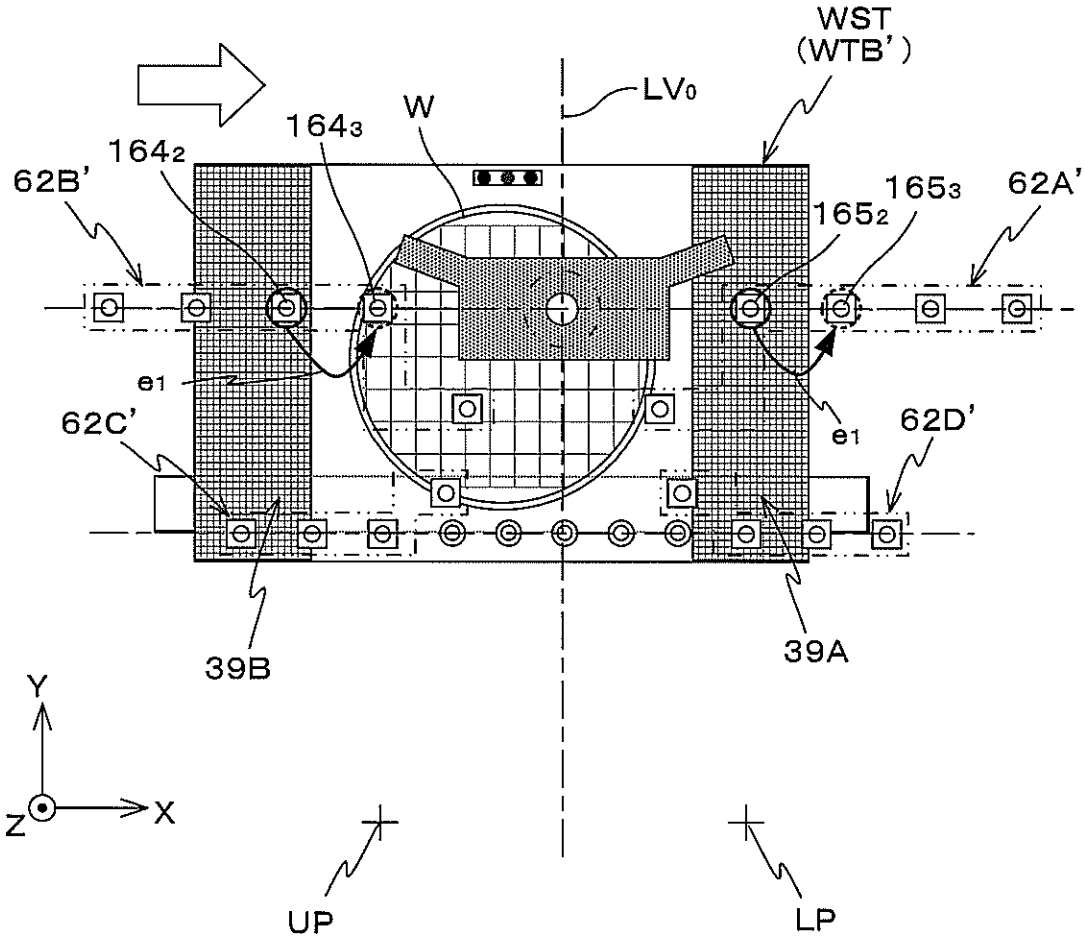
WST
(WTB')
LV0
W
1643
1642
62B'
1653
1652
62A'
e1
e1
62C'
62D'
39B
39A
Y
Z
X
UP
LP

Fig. 34

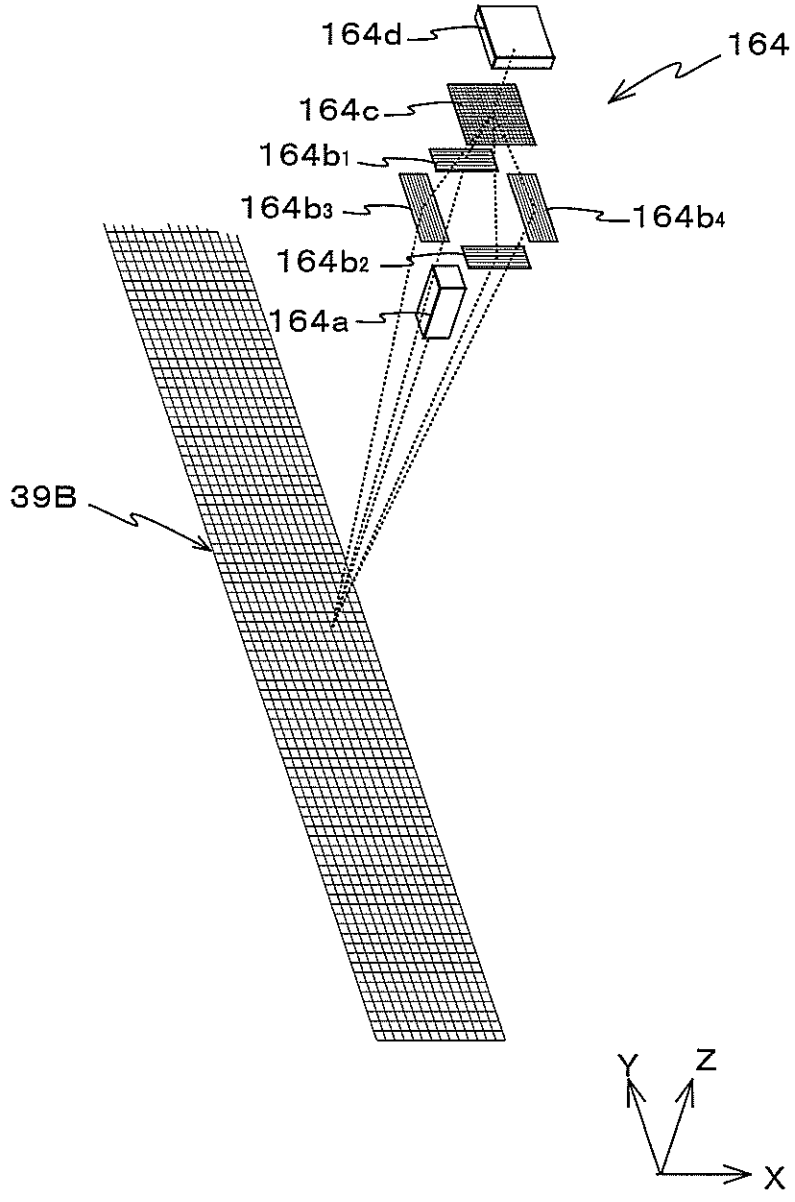

Fig. 35

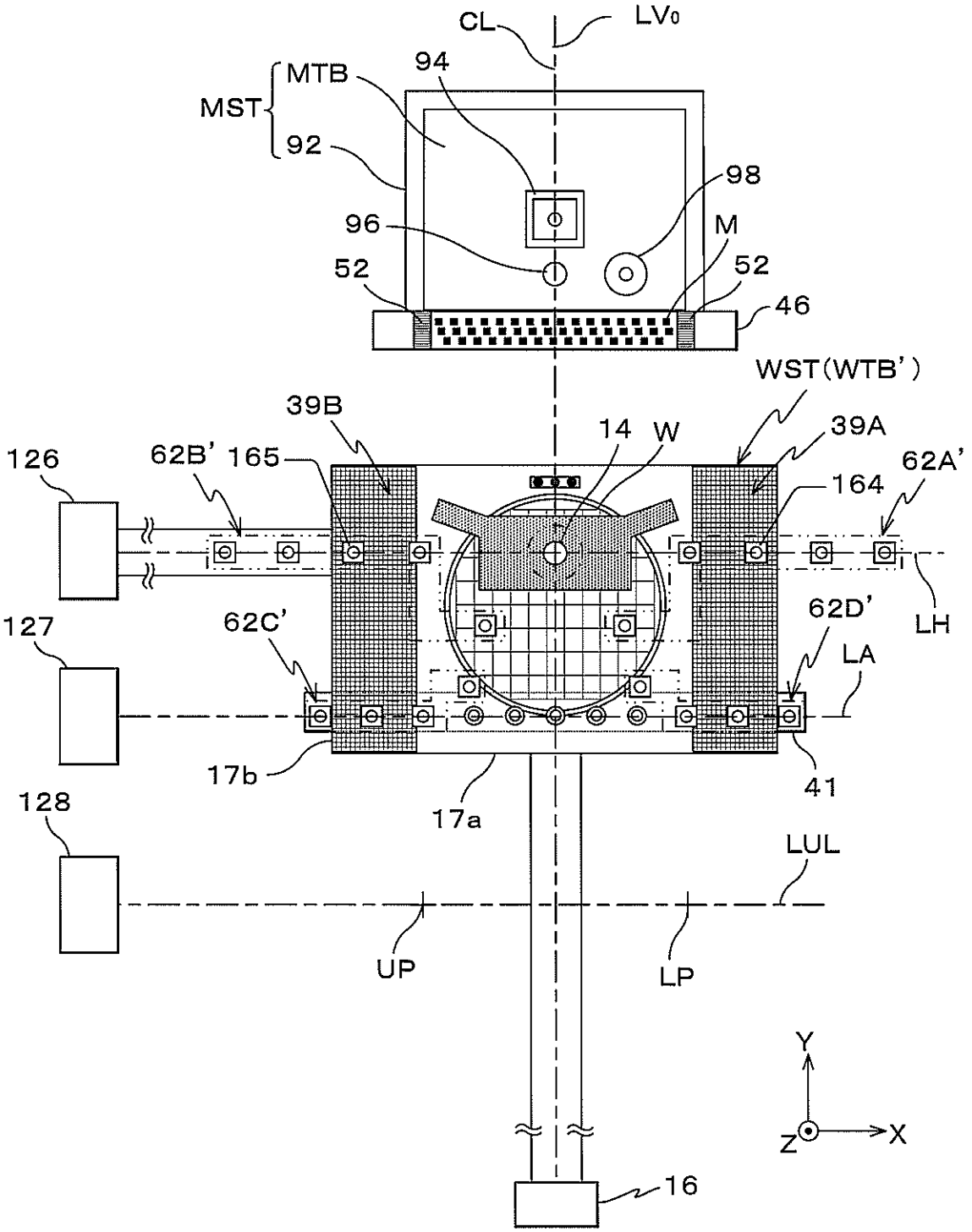
CL
LV0
MST
MTB
92
94
98
96
M
52
52
46
WST(WTB')
39B
14
W
39A
126
62B'
165
164
62A'
LH
127
62C'
62D'
LA
17b
17a
41
128
LUL
UP
LP
Y
Z
X
16

Fig. 36

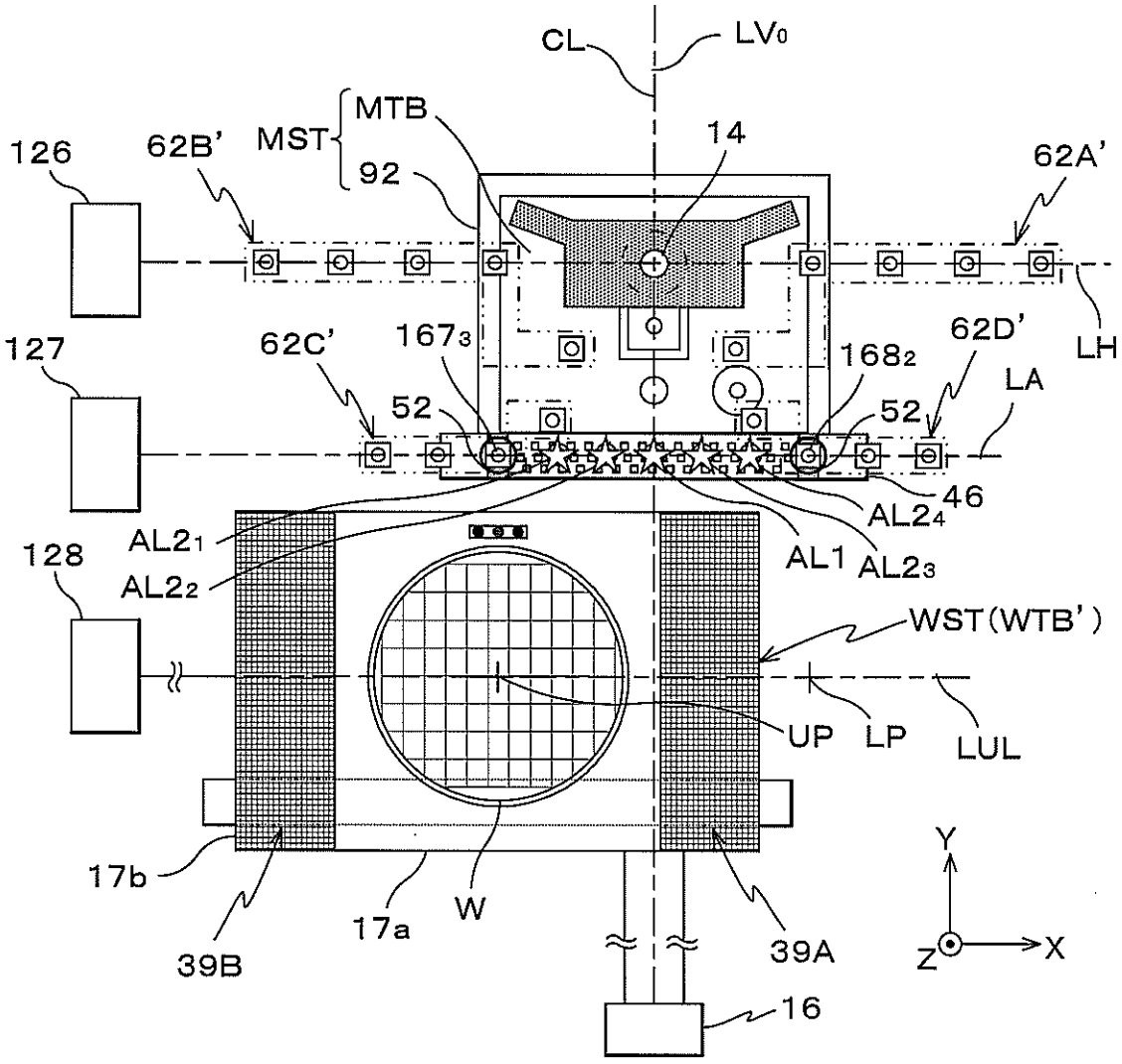
CL
LV0
MTB
MST
92
14
126
62B'
62A'
127
62C'
167₃
168₂
62D'
LH
LA
52
52
46
AL2₄
AL2₁
AL2₂
AL1
AL2₃
128
WST(WTB')
UP
LP
LUL
17b
39B
17a
W
39A
16
Y
Z
X

Fig. 37

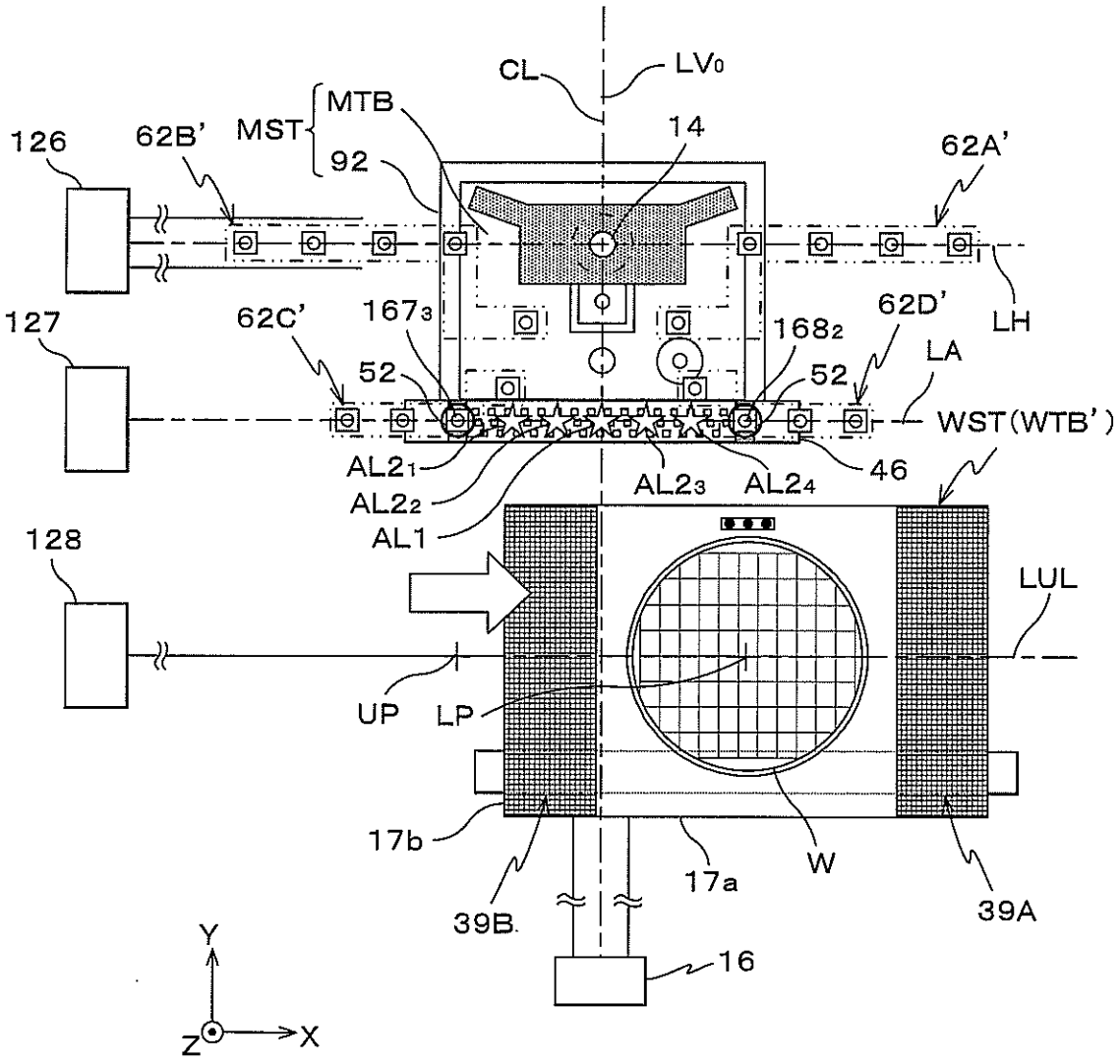
CL
LV0
MTB
MST
92
14
126
62B'
62A'
127
62C'
167₃
168₂
62D'
LH
52
52
LA
WST(WTB')
AL2₁
AL2₂
AL1
AL2₃
AL2₄
46
128
LUL
UP
LP
17b
17a
W
39B
39A
16
Y
Z
X

Fig. 38

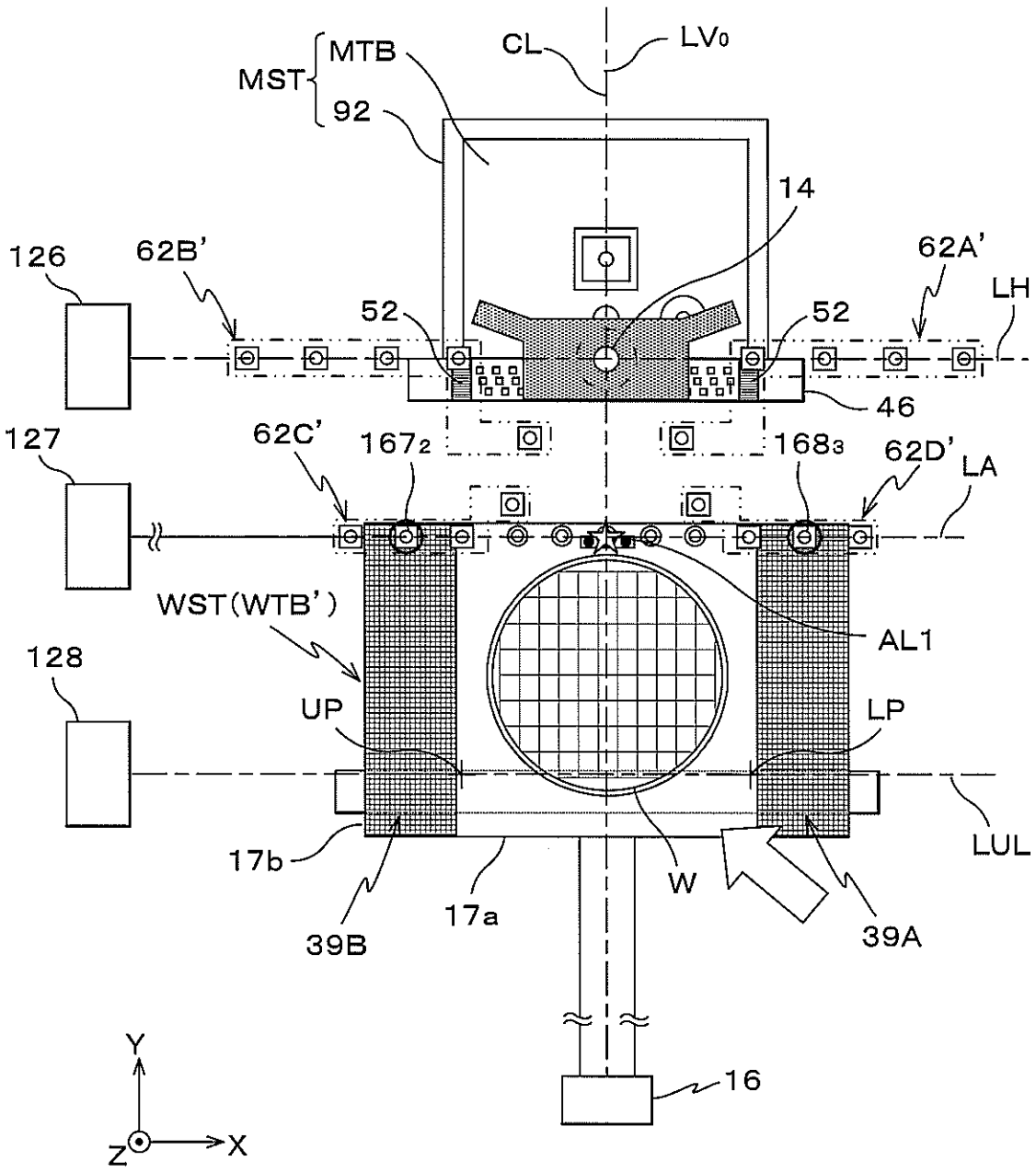
MST
MTB
92
CL
LV0
14
126
62B'
62A'
LH
52
52
46
127
62C'
167₂
168₃
62D'
LA
WST(WTB')
AL1
128
UP
LP
LUL
17b
39B
17a
W
39A
16
Y
Z
X

Fig. 39

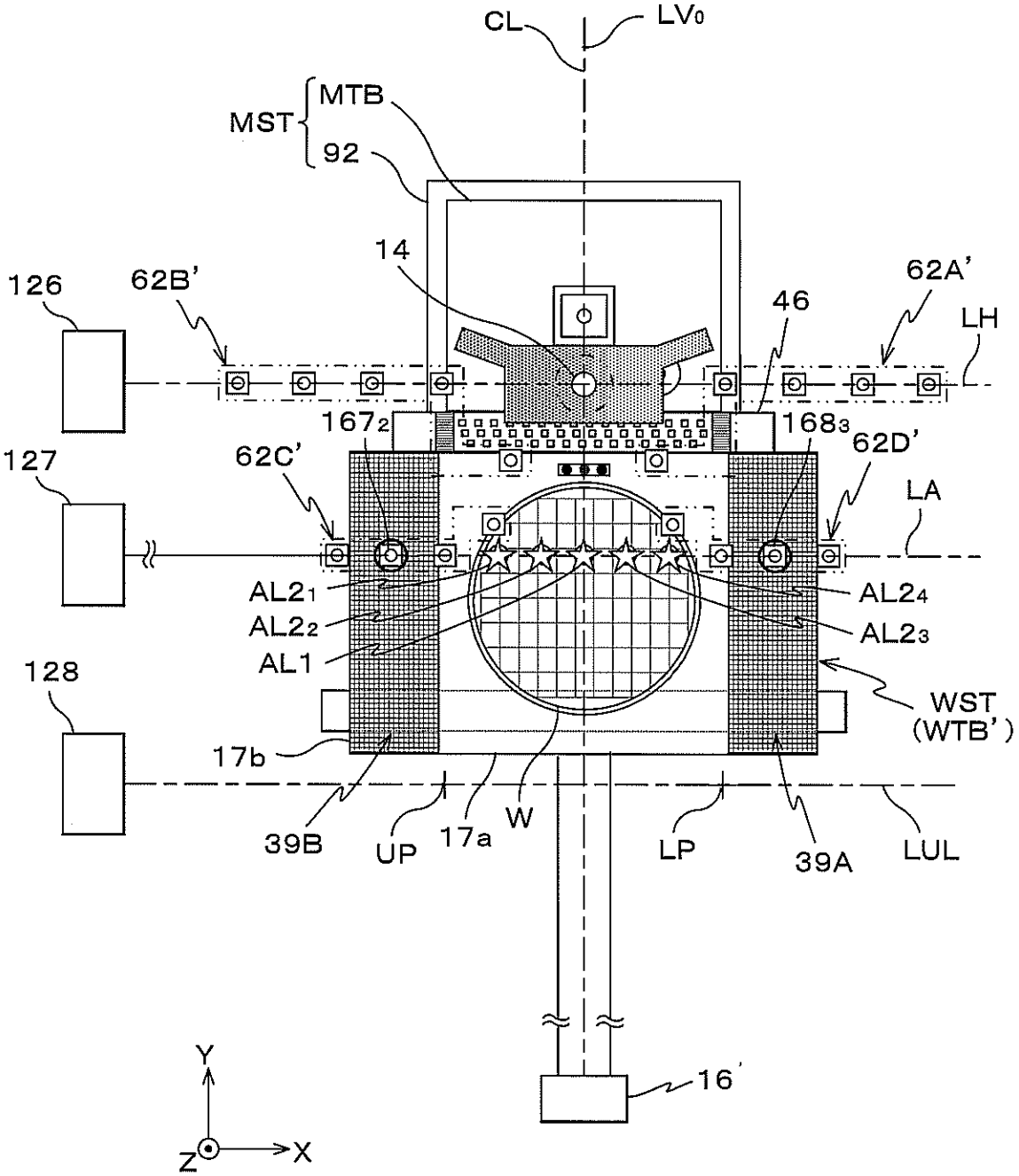
CL
LV0
MST
MTB
92
14
126
62B'
62A'
46
LH
127
62C'
167₂
168₃
62D'
LA
128
AL2₁
AL2₂
AL1
AL2₄
AL2₃
WST
(WTB')
17b
39B
UP
17a
W
LP
39A
LUL
16'
Y
Z
X

Fig. 40

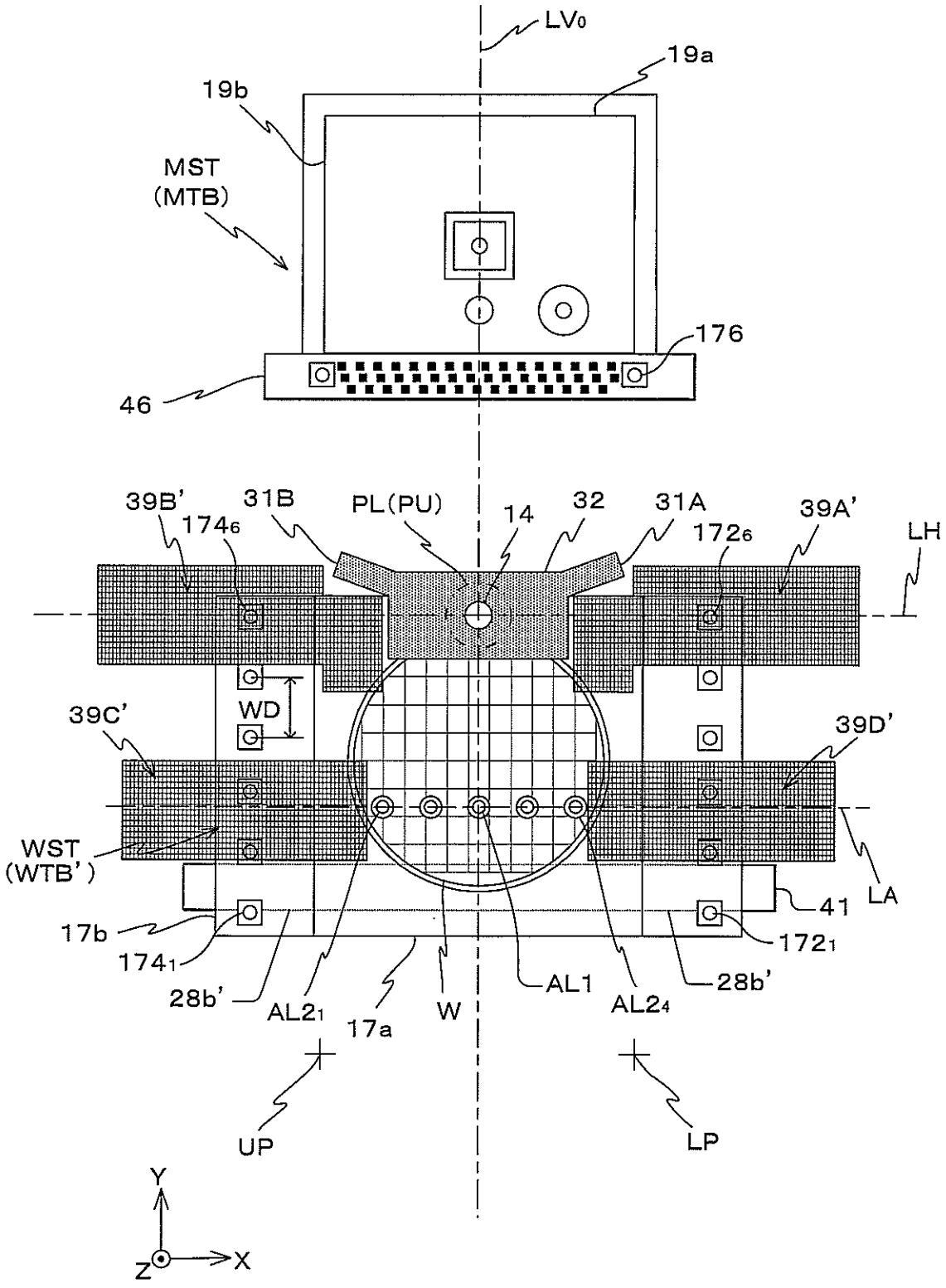
LV0
19a
19b
MST
(MTB)
176
46
39B'
31B
PL(PU)
14
32
31A
39A'
LH
174₆
172₆
WD
39C'
39D'
WST
(WTB')
LA
41
17b
174₁
172₁
28b'
AL2₁
17a
W
AL1
AL2₄
28b'
UP
LP
Y
Z
X

Fig. 41

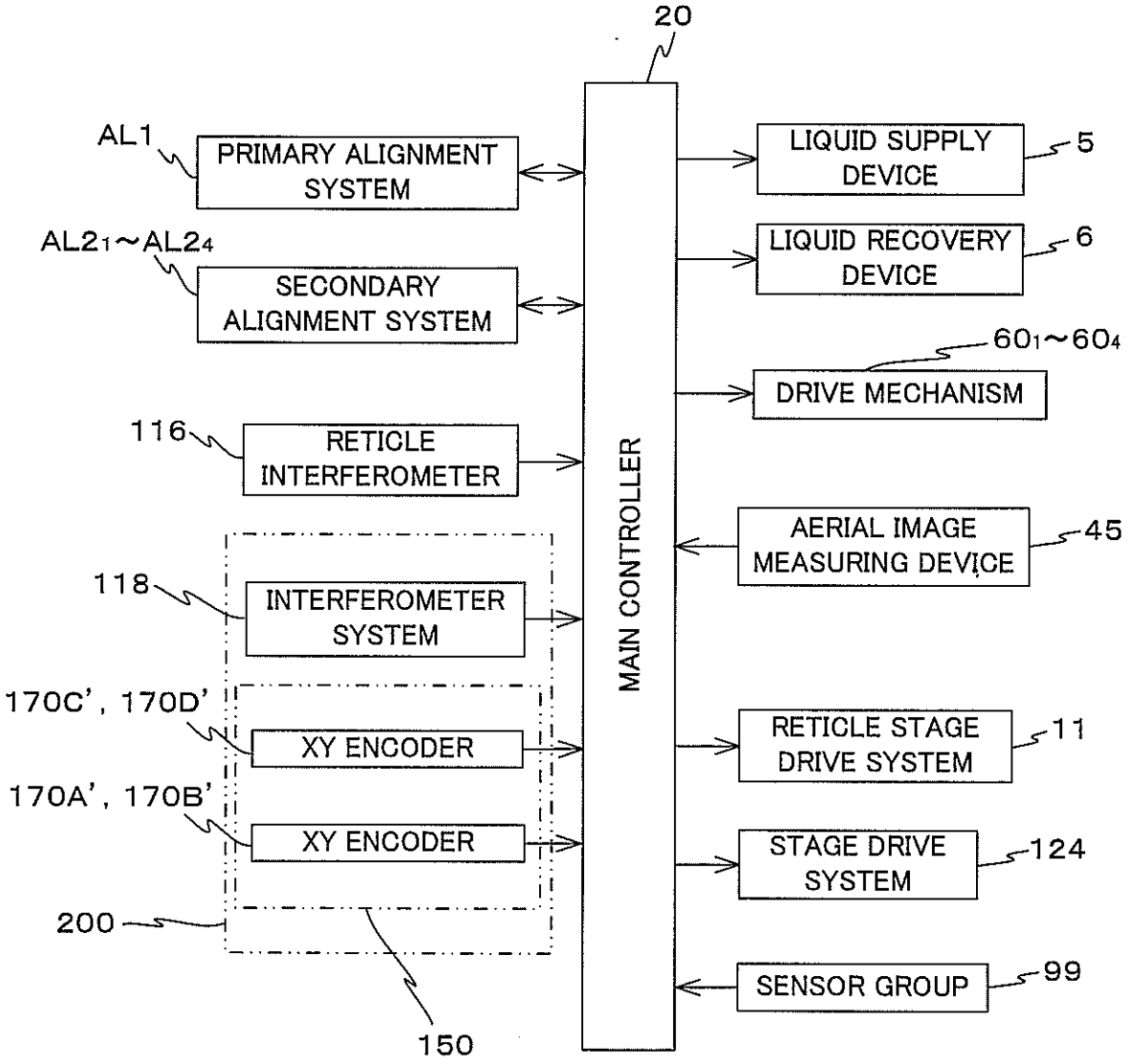
20
AL1
PRIMARY ALIGNMENT SYSTEM
AL2₁~AL2₄
SECONDARY ALIGNMENT SYSTEM
116
RETICLE INTERFEROMETER
118
INTERFEROMETER SYSTEM
170C', 170D'
XY ENCODER
170A', 170B'
XY ENCODER
200
150
MAIN CONTROLLER
LIQUID SUPPLY DEVICE
5
LIQUID RECOVERY DEVICE
6
60₁~60₄
DRIVE MECHANISM
AERIAL IMAGE MEASURING DEVICE
45
RETICLE STAGE DRIVE SYSTEM
11
STAGE DRIVE SYSTEM
124
SENSOR GROUP
99

Fig. 42

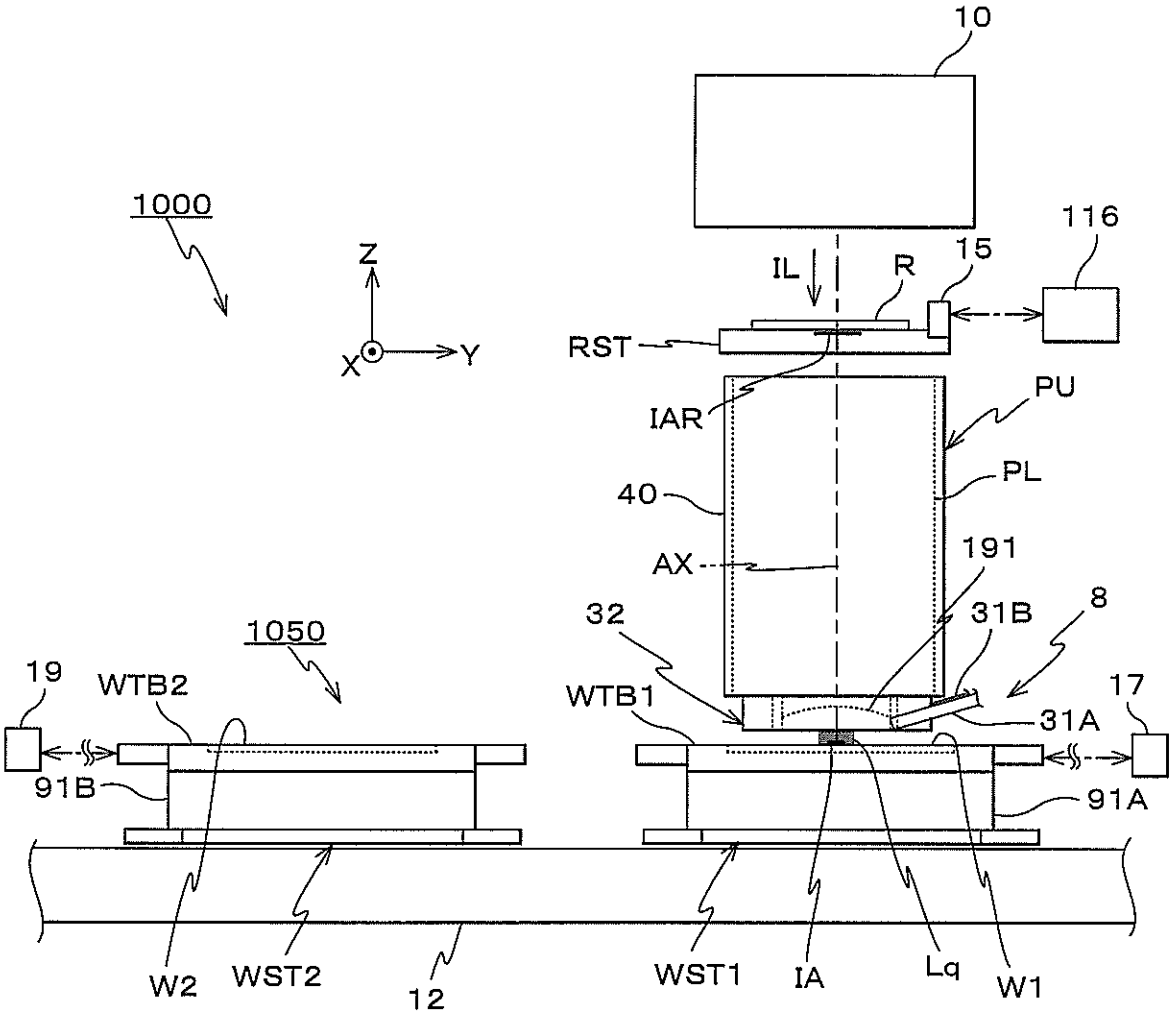
10
1000
Z
X
Y
116
IL
R
15
RST
IAR
PU
PL
40
AX
191
32
31B
8
1050
19
WTB2
WTB1
17
31A
91B
91A
W2
WST2
12
WST1
IA
Lq
W1

Fig. 43A

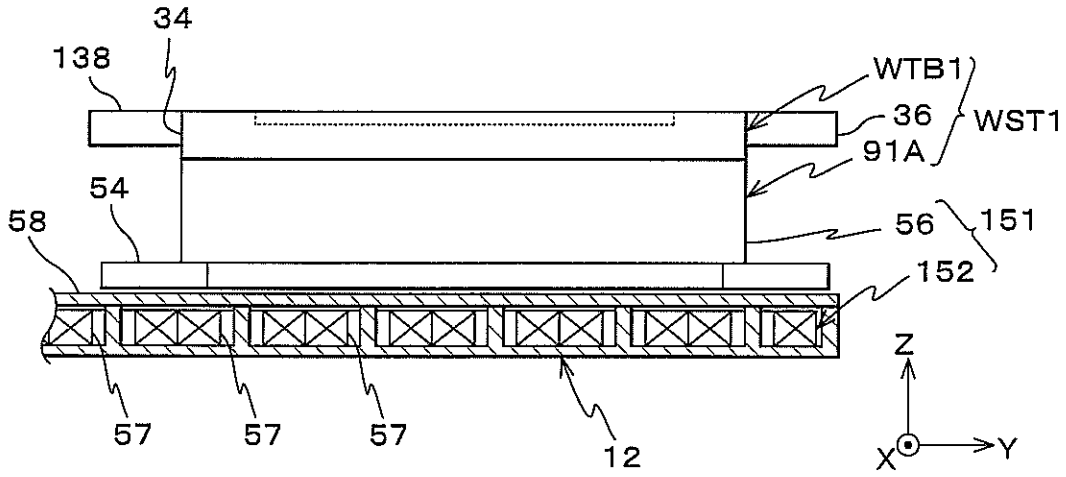

Fig. 43B

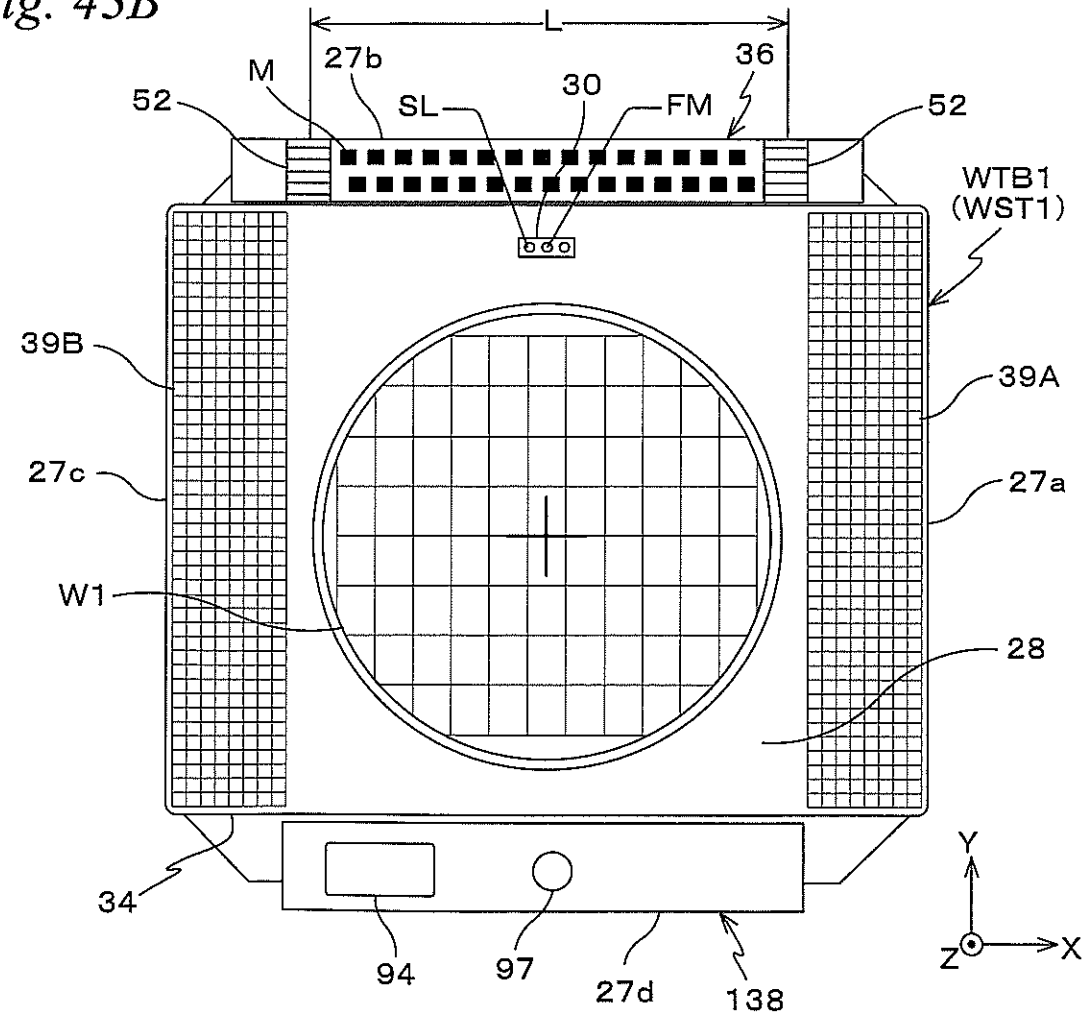

Fig. 44A

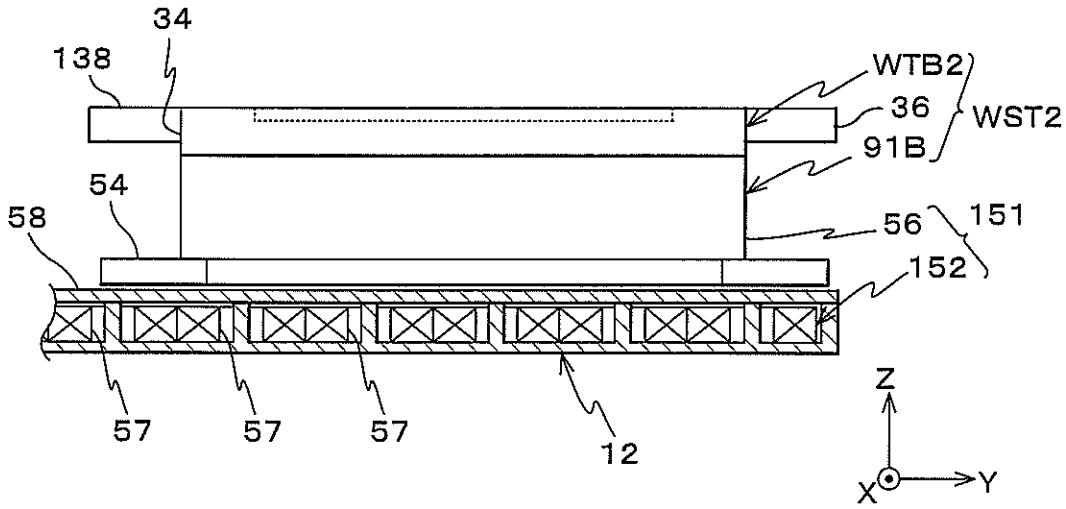

Fig. 44B

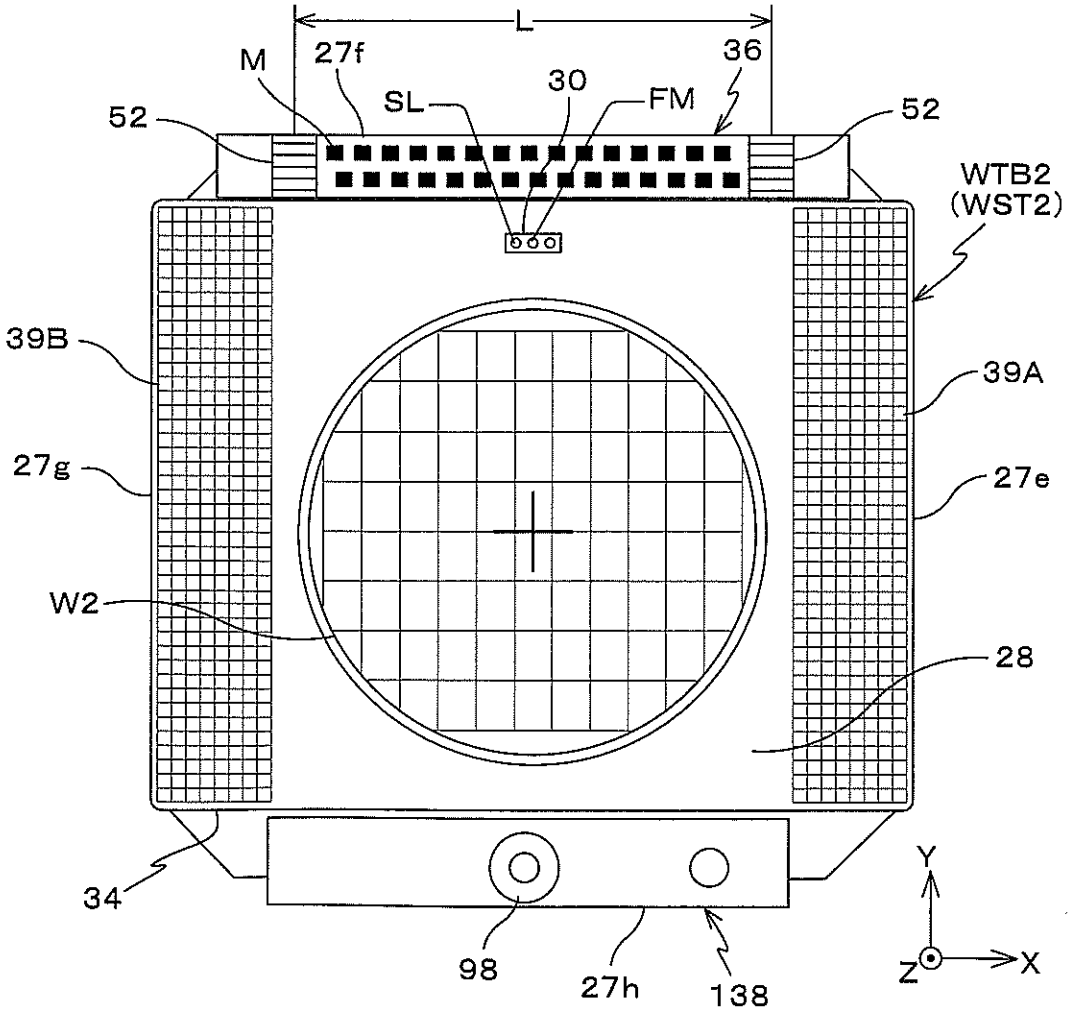

Fig. 45

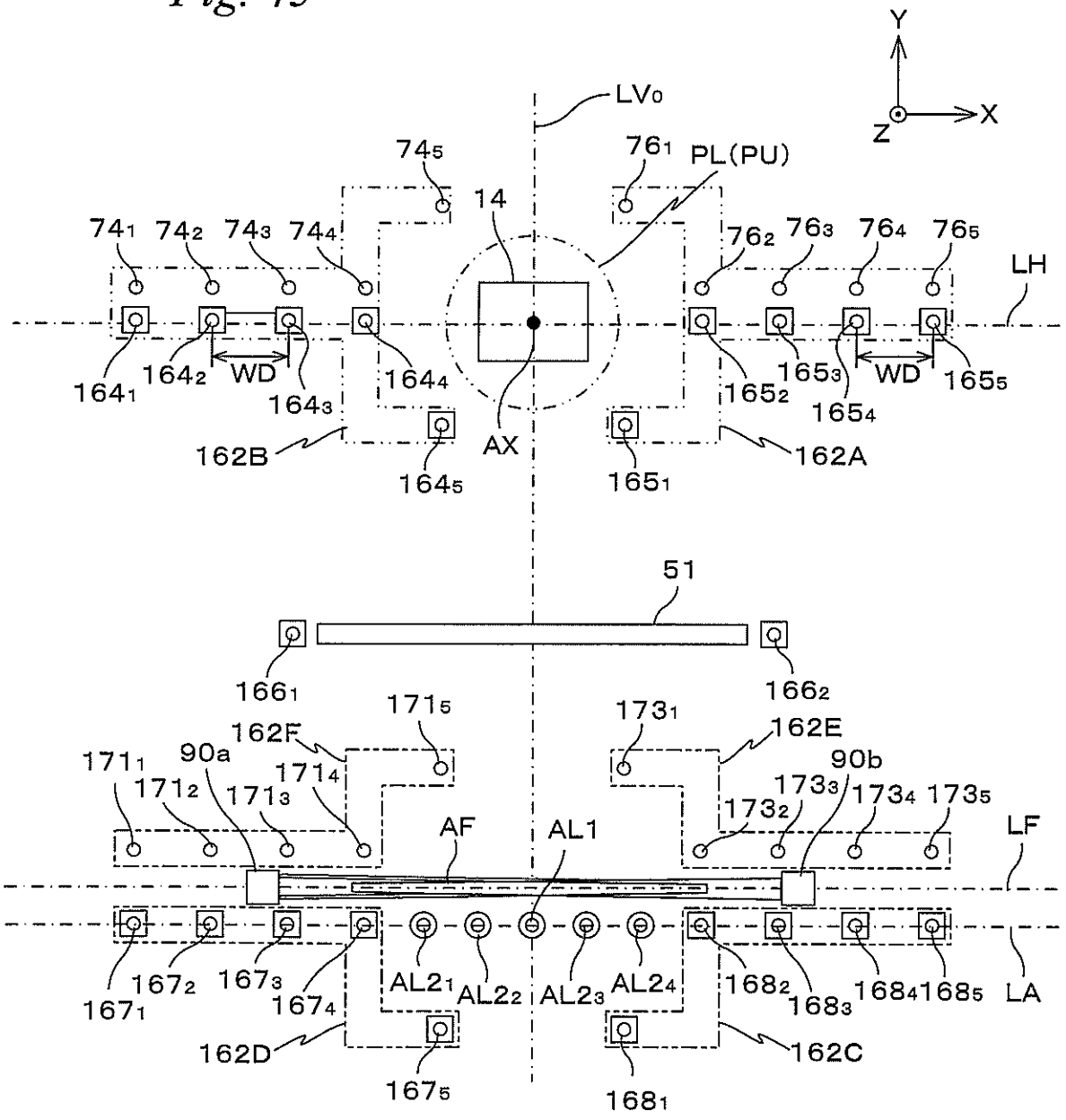
Y
X
Z
LV0
74₅
76₁
PL(PU)
14
74₁ 74₂ 74₃ 74₄
76₂ 76₃ 76₄ 76₅
LH
164₁
164₂
WD
164₃
164₄
165₂
165₃
WD
165₄
165₅
162B
AX
162A
164₅
165₁
51
166₁
166₂
171₅
173₁
162F
162E
171₁
90a
171₄
90b
171₂
171₃
173₃
173₄ 173₅
173₂
AF
AL1
LF
167₂
167₃
AL2₁
AL2₂
AL2₃
AL2₄
168₂
168₃
168₄
168₅
LA
167₁
167₄
162D
162C
167₅
168₁

Fig. 46

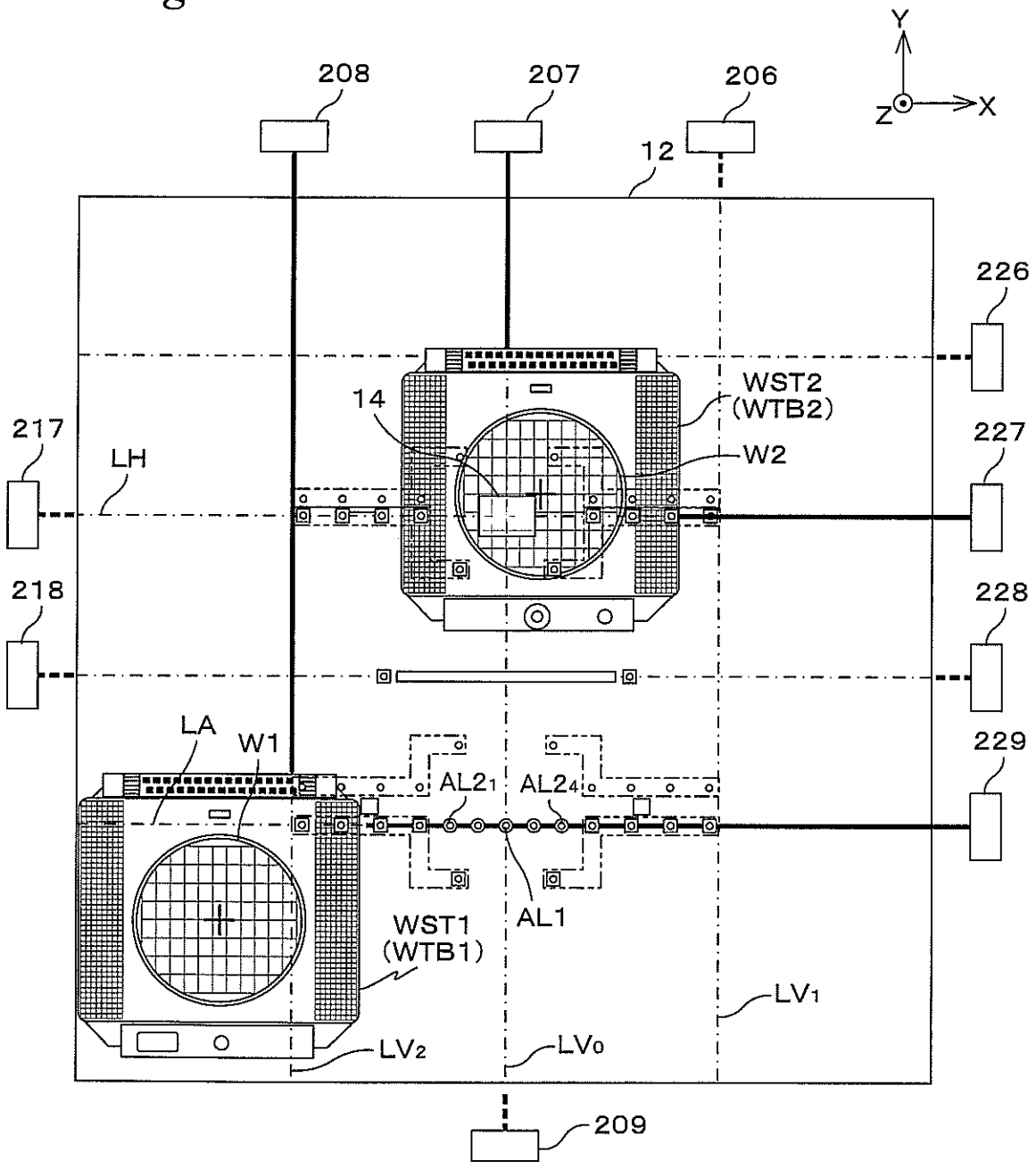
Y
Z
X
208
207
206
12
226
14
WST2
(WTB2)
217
LH
W2
227
218
228
LA
W1
229
AL2₁
AL2₄
AL1
WST1
(WTB1)
LV₁
LV₂
LV₀
209

Fig. 47

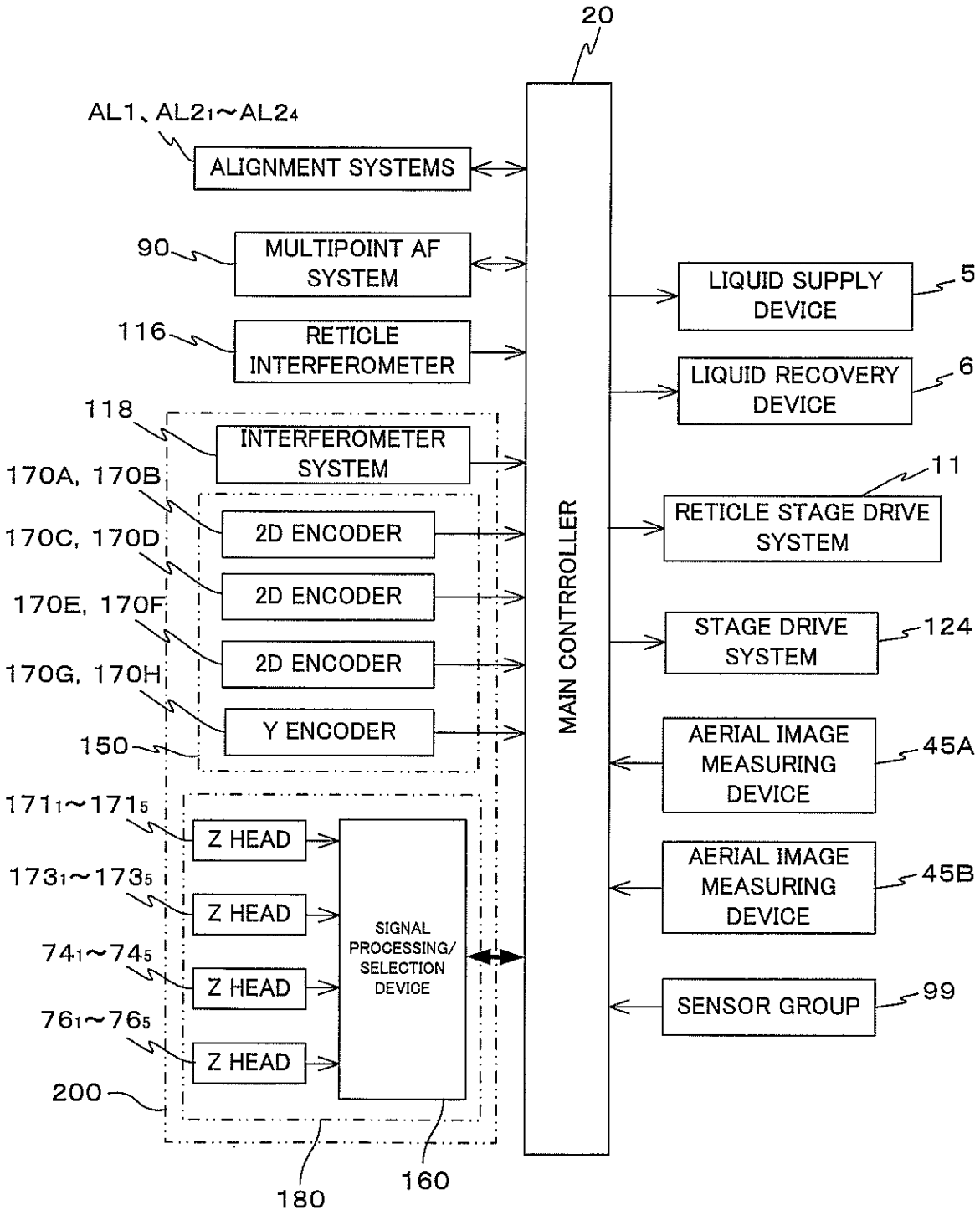
20
AL1、AL2₁～AL2₄
ALIGNMENT SYSTEMS
90
MULTIPOINT AF SYSTEM
116
RETICLE INTERFEROMETER
118
INTERFEROMETER SYSTEM
170A, 170B
2D ENCODER
170C, 170D
2D ENCODER
170E, 170F
2D ENCODER
170G, 170H
Y ENCODER
150
171₁～171₅
Z HEAD
173₁～173₅
Z HEAD
74₁～74₅
Z HEAD
76₁～76₅
Z HEAD
200
SIGNAL PROCESSING/ SELECTION DEVICE
180
160
MAIN CONTRROLLER
LIQUID SUPPLY DEVICE
5
LIQUID RECOVERY DEVICE
6
11
RETICLE STAGE DRIVE SYSTEM
STAGE DRIVE SYSTEM
124
AERIAL IMAGE MEASURING DEVICE
45A
AERIAL IMAGE MEASURING DEVICE
45B
SENSOR GROUP
99

Fig. 48

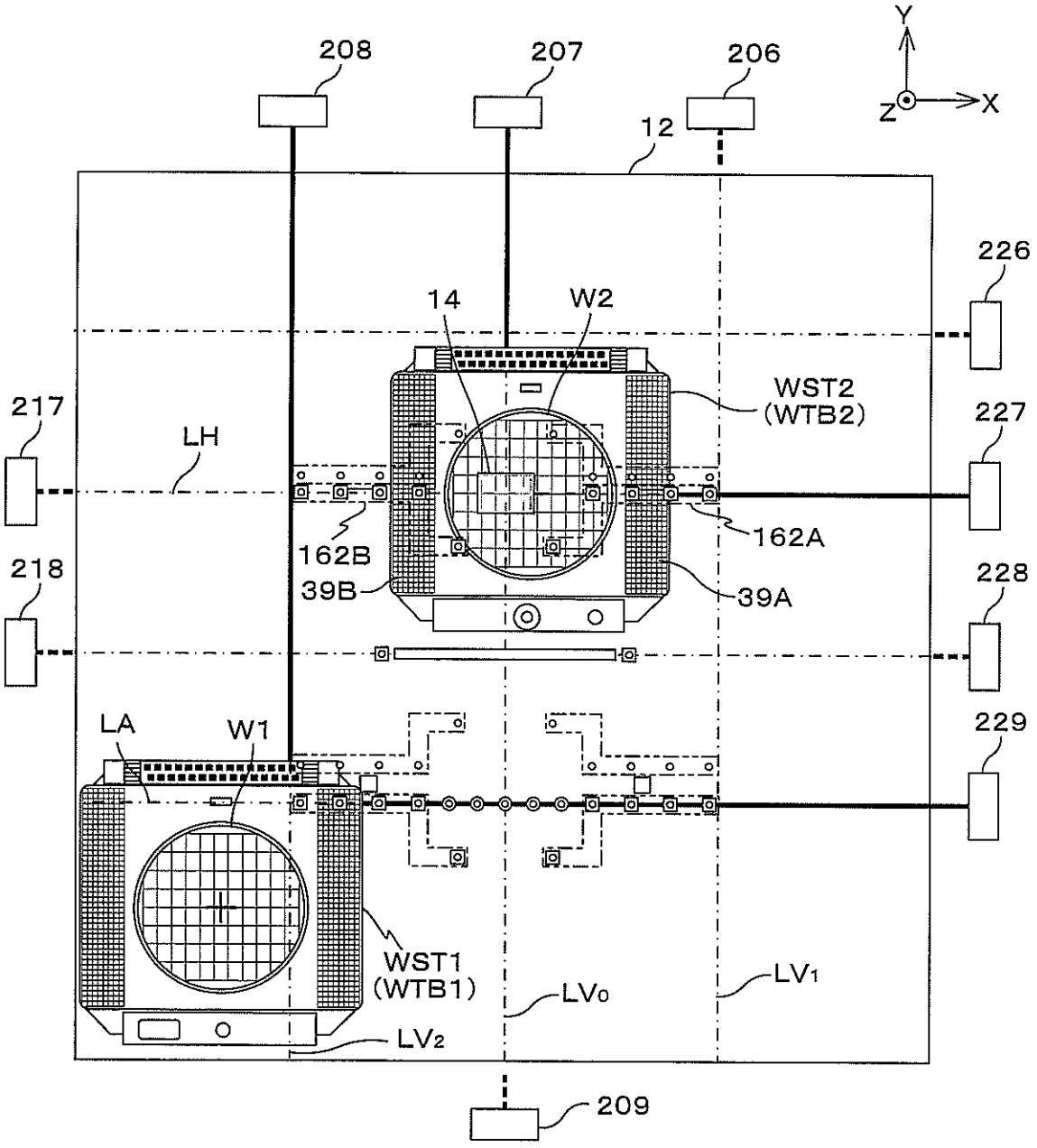
208
207
206
Y
Z
X
12
226
14
W2
WST2
(WTB2)
217
LH
227
162B
162A
218
39B
39A
228
LA
W1
229
WST1
(WTB1)
LV0
LV1
LV2
209

Fig. 49

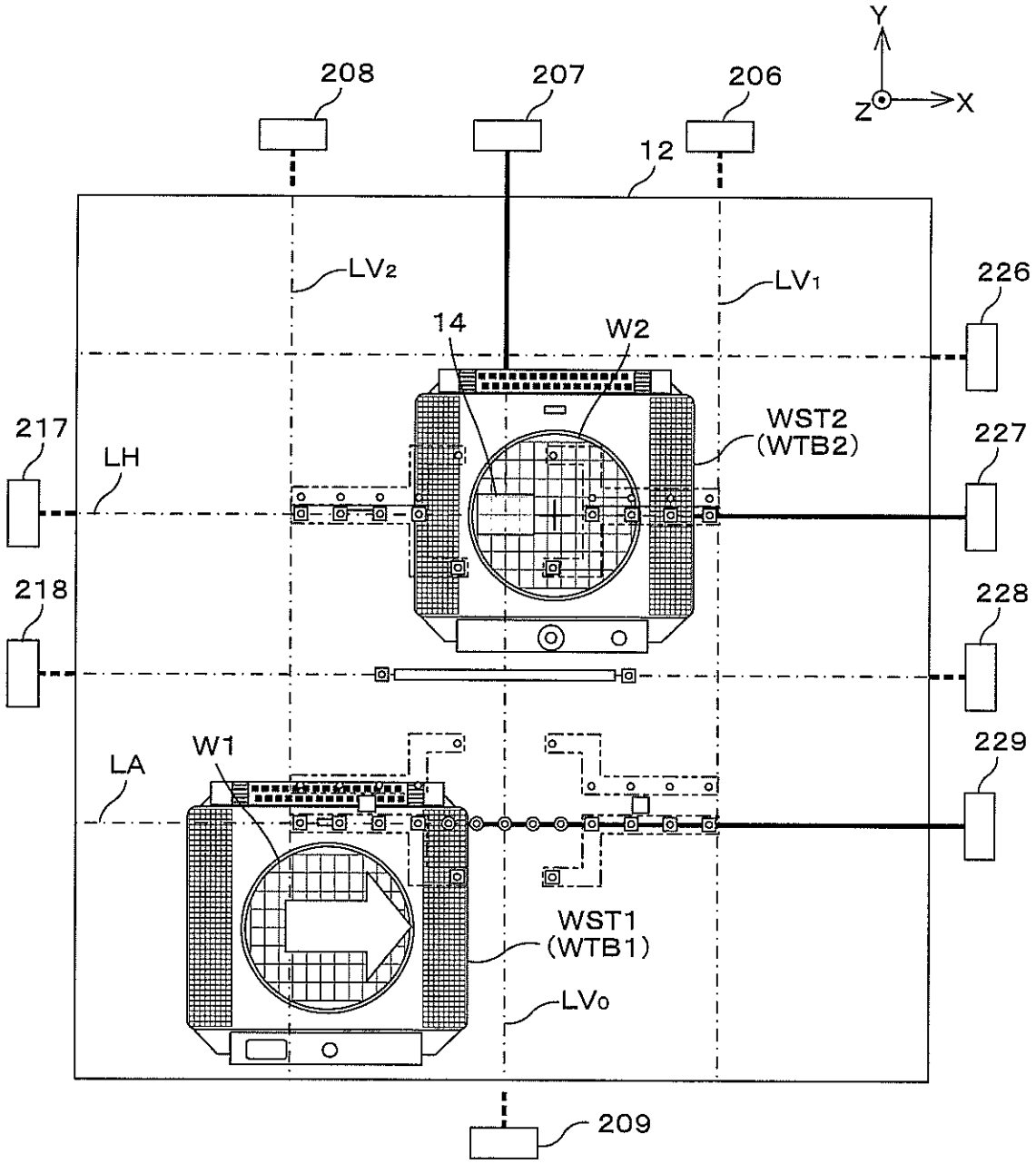
Y
Z
X
208
207
206
12
LV2
LV1
226
14
W2
217
LH
WST2
(WTB2)
227
218
228
LA
W1
229
WST1
(WTB1)
LV0
209

Fig. 50

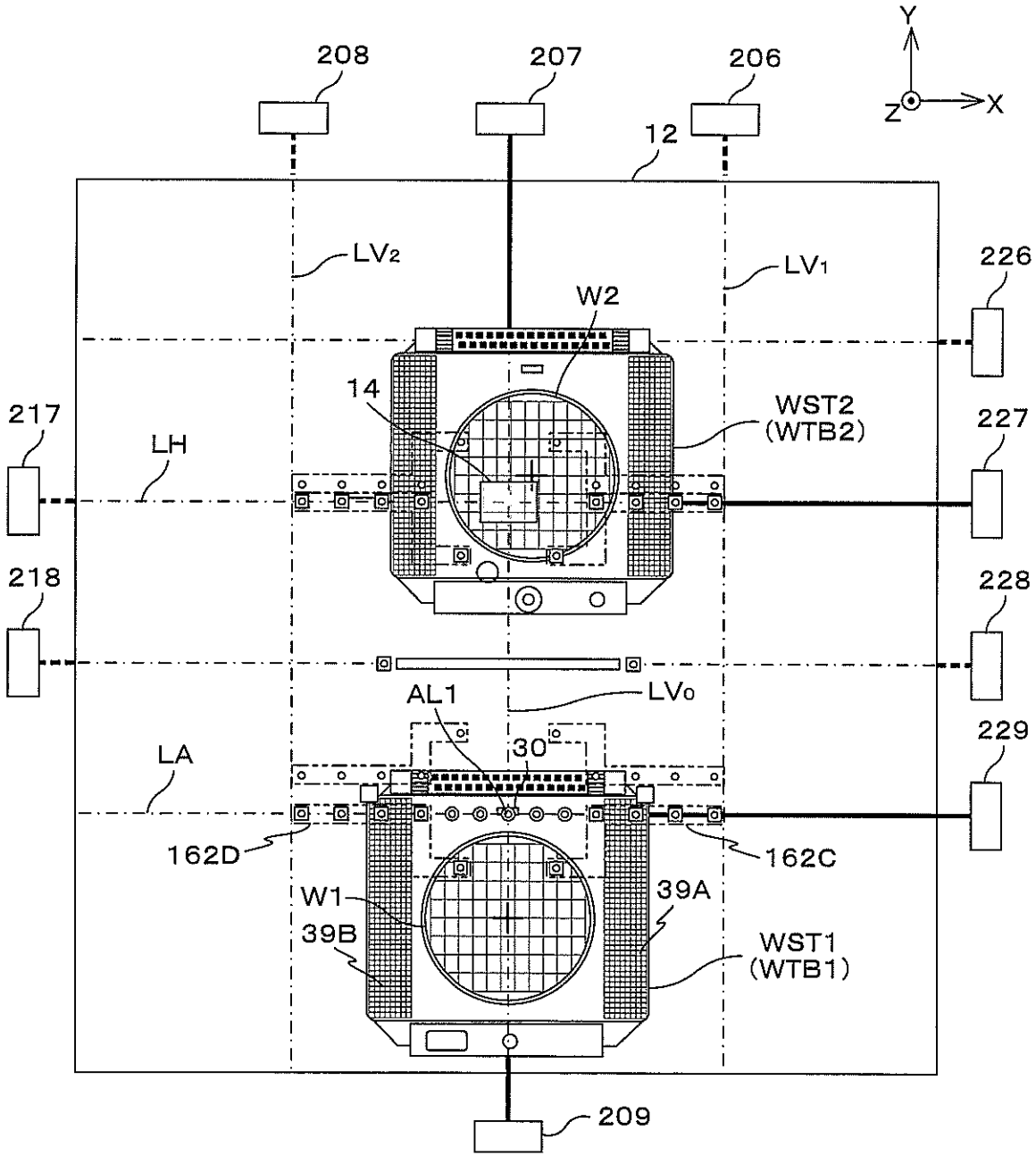
208
207
206
Y
Z
X
12
LV2
LV1
226
W2
14
WST2
(WTB2)
217
LH
227
218
228
AL1
LV0
229
LA
30
162D
162C
W1
39A
39B
WST1
(WTB1)
209

Fig. 51

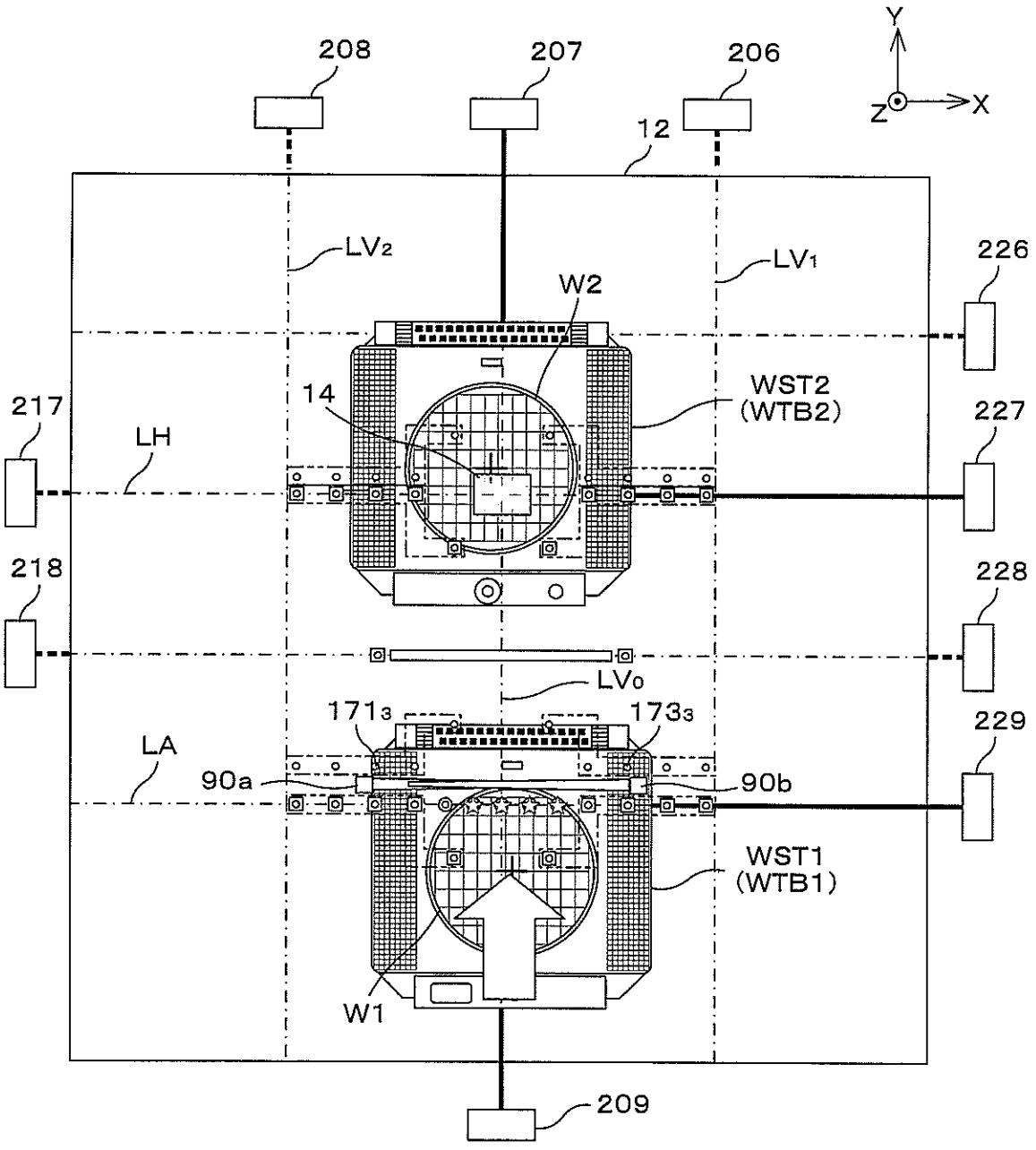
208
207
206
Y
Z
X
12
LV2
LV1
226
W2
14
WST2
(WTB2)
217
LH
227
218
228
LV0
171₃
173₃
229
LA
90a
90b
WST1
(WTB1)
W1
209

Fig. 52

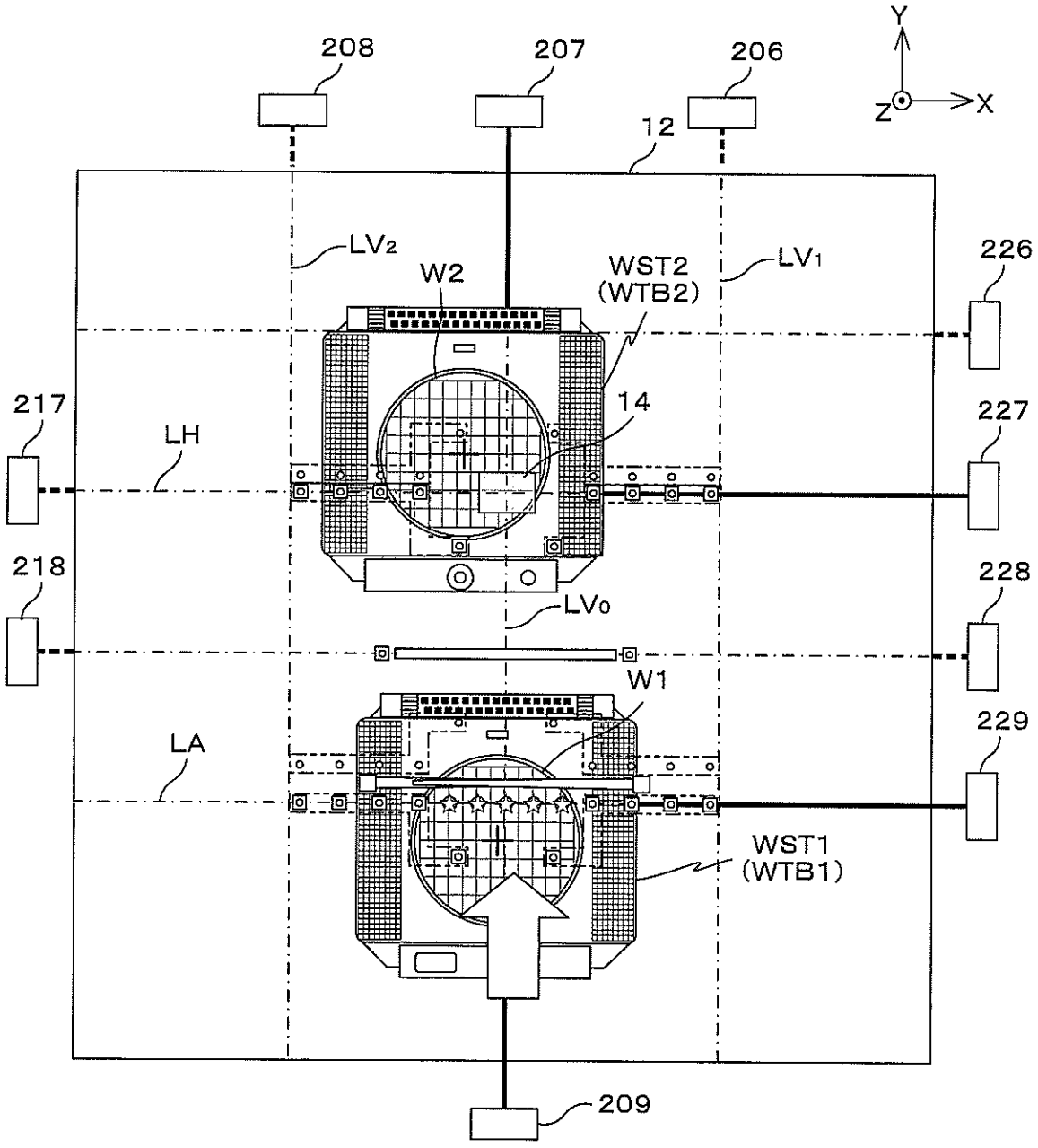
208
207
206
Y
Z
X
12
LV2
W2
WST2
(WTB2)
LV1
226
217
LH
14
227
218
228
LV0
W1
LA
229
WST1
(WTB1)
209

Fig. 53

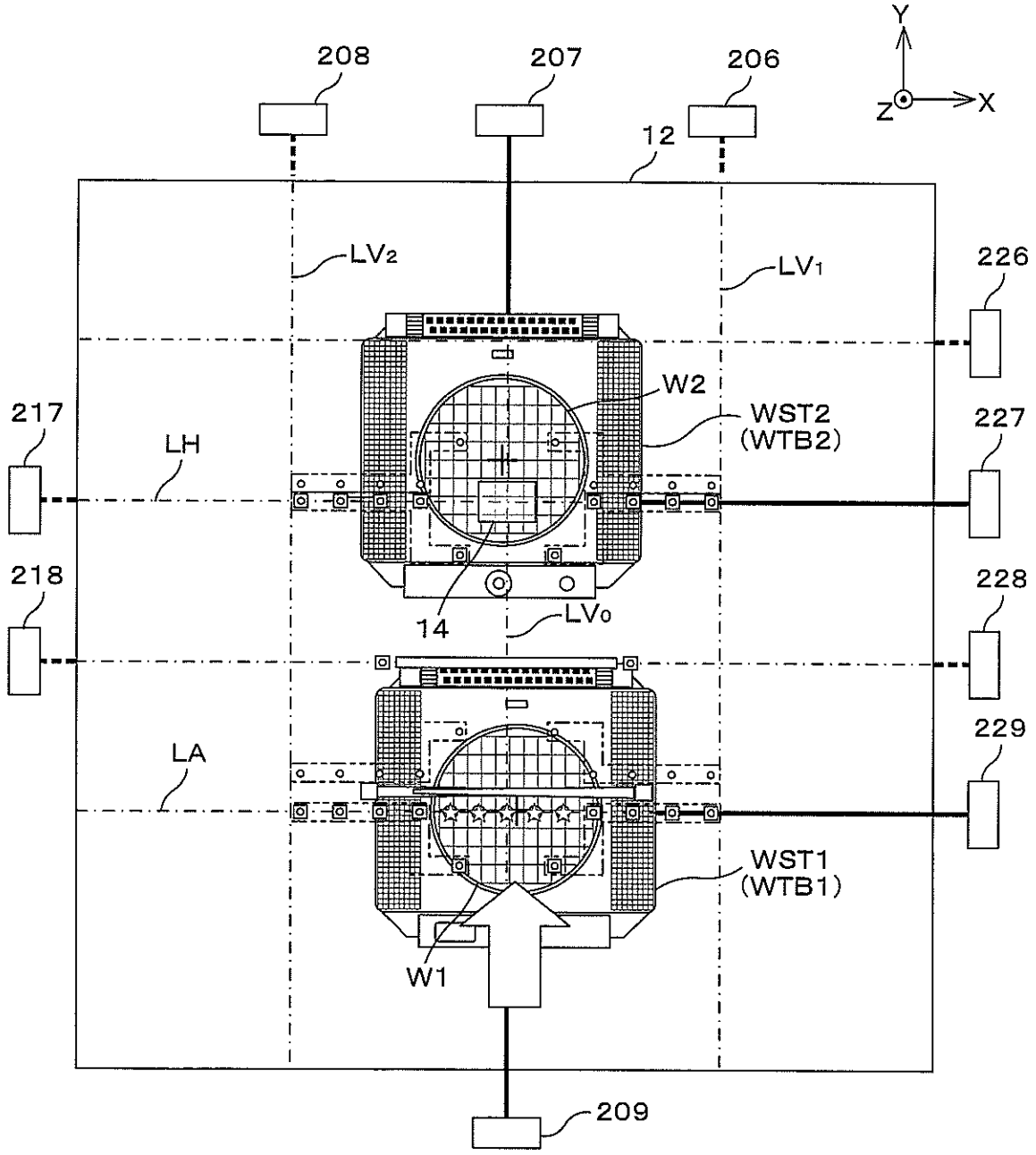
Y
Z
X
208
207
206
12
LV2
LV1
226
217
LH
W2
WST2
(WTB2)
227
218
14
LV0
228
LA
229
WST1
(WTB1)
W1
209

Fig. 54

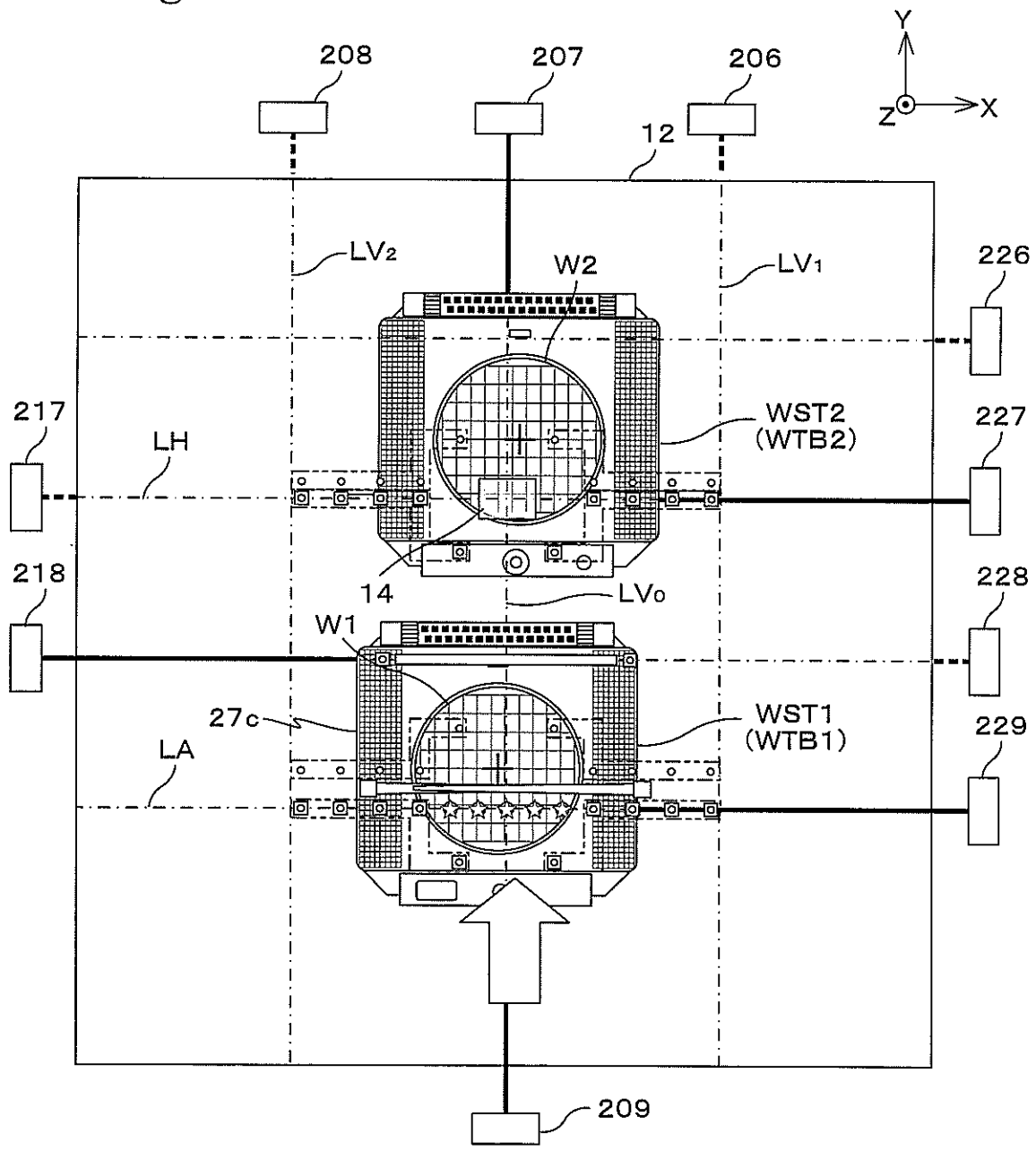
208
207
206
Y
Z
X
12
LV2
W2
LV1
226
217
LH
WST2
(WTB2)
227
218
14
LV0
228
W1
27c
WST1
(WTB1)
LA
229
209

Fig. 55

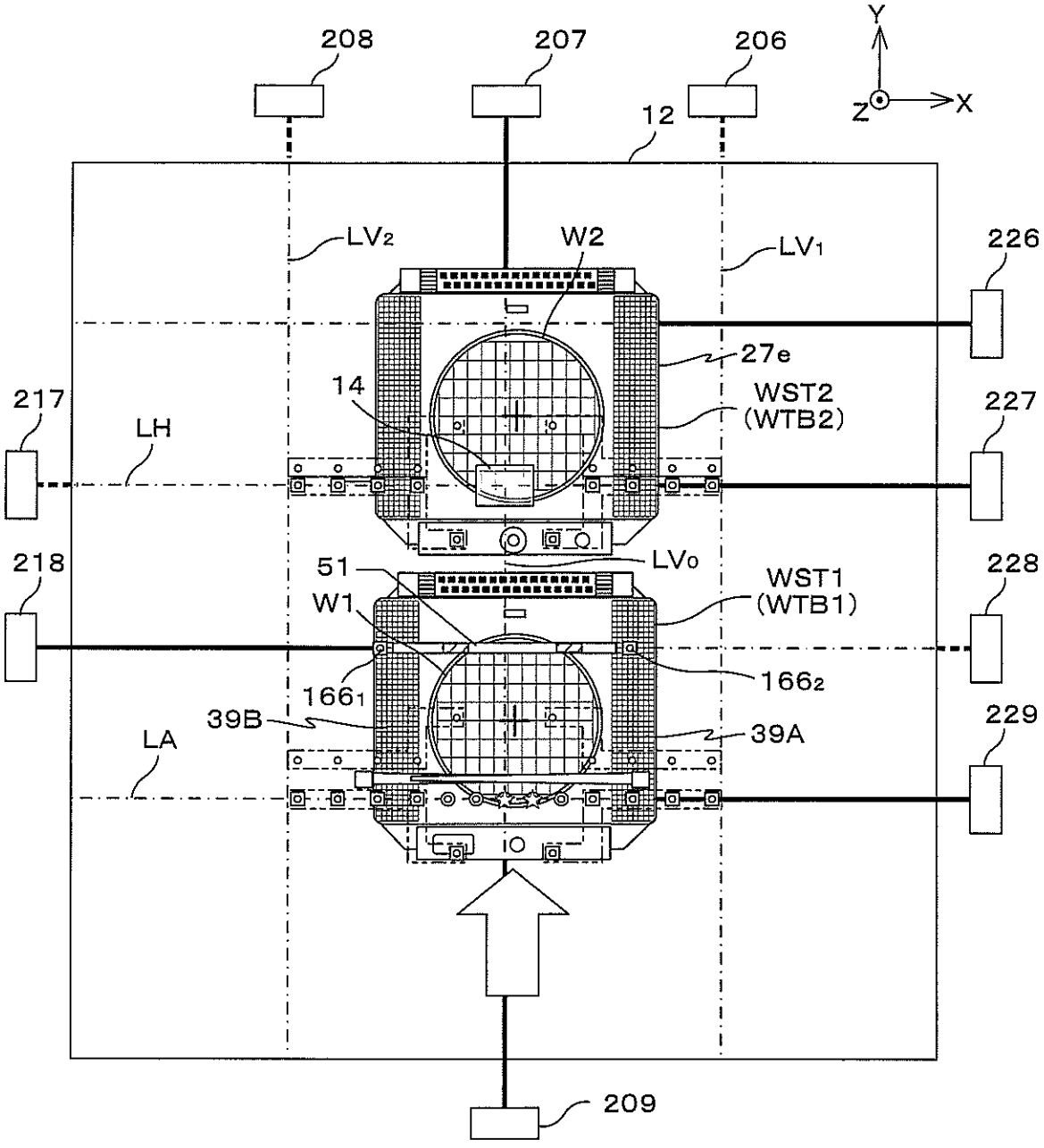
208
207
206
Y
Z
X
12
LV2
W2
LV1
226
27e
14
WST2
(WTB2)
217
LH
227
218
51
LV0
WST1
(WTB1)
228
W1
166₂
166₁
39B
39A
229
LA
209

Fig. 56

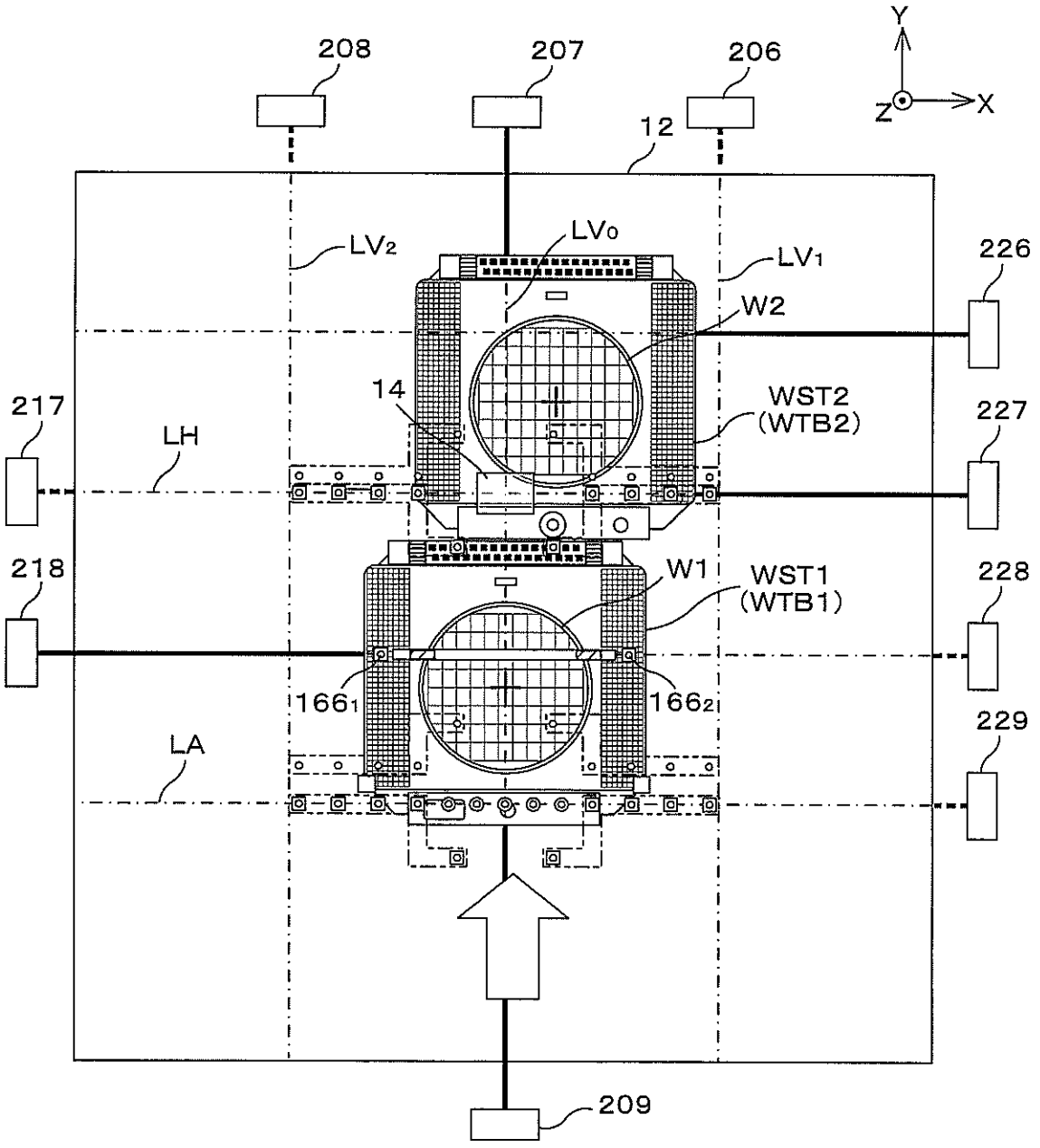
208
207
206
Y
Z
X
12
LV2
LV0
LV1
226
W2
14
WST2
(WTB2)
217
LH
227
218
W1
WST1
(WTB1)
228
166₁
166₂
229
LA
209

Fig. 57

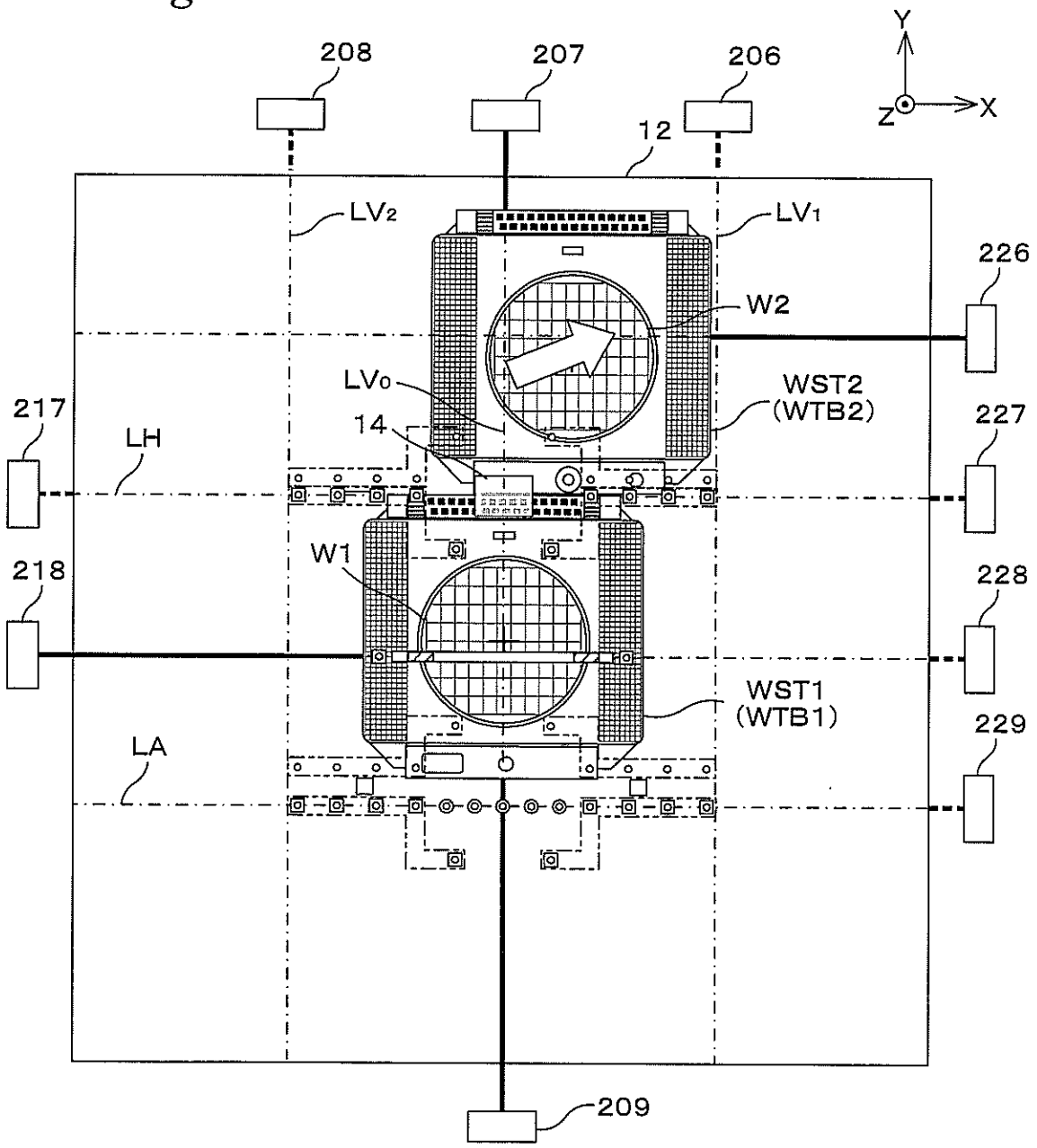
208
207
206
Y
Z
X
12
LV2
LV1
226
W2
LV0
WST2
(WTB2)
217
14
227
LH
W1
218
228
WST1
(WTB1)
229
LA
209

Fig. 58

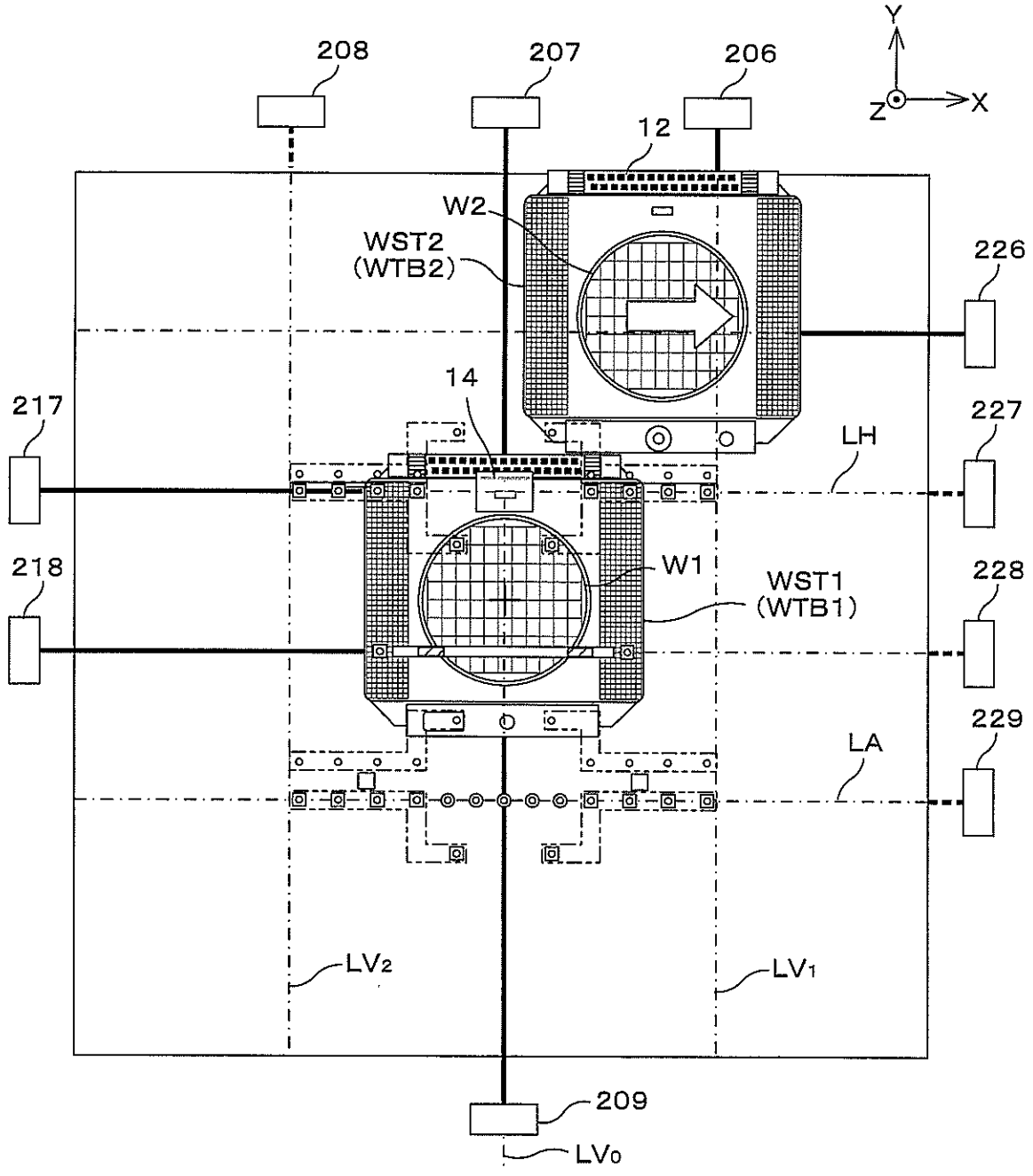
208
207
206
Y
Z
X
12
W2
WST2
(WTB2)
226
14
217
227
LH
W1
218
WST1
(WTB1)
228
229
LA
LV2
LV1
209
LV0

Fig. 59

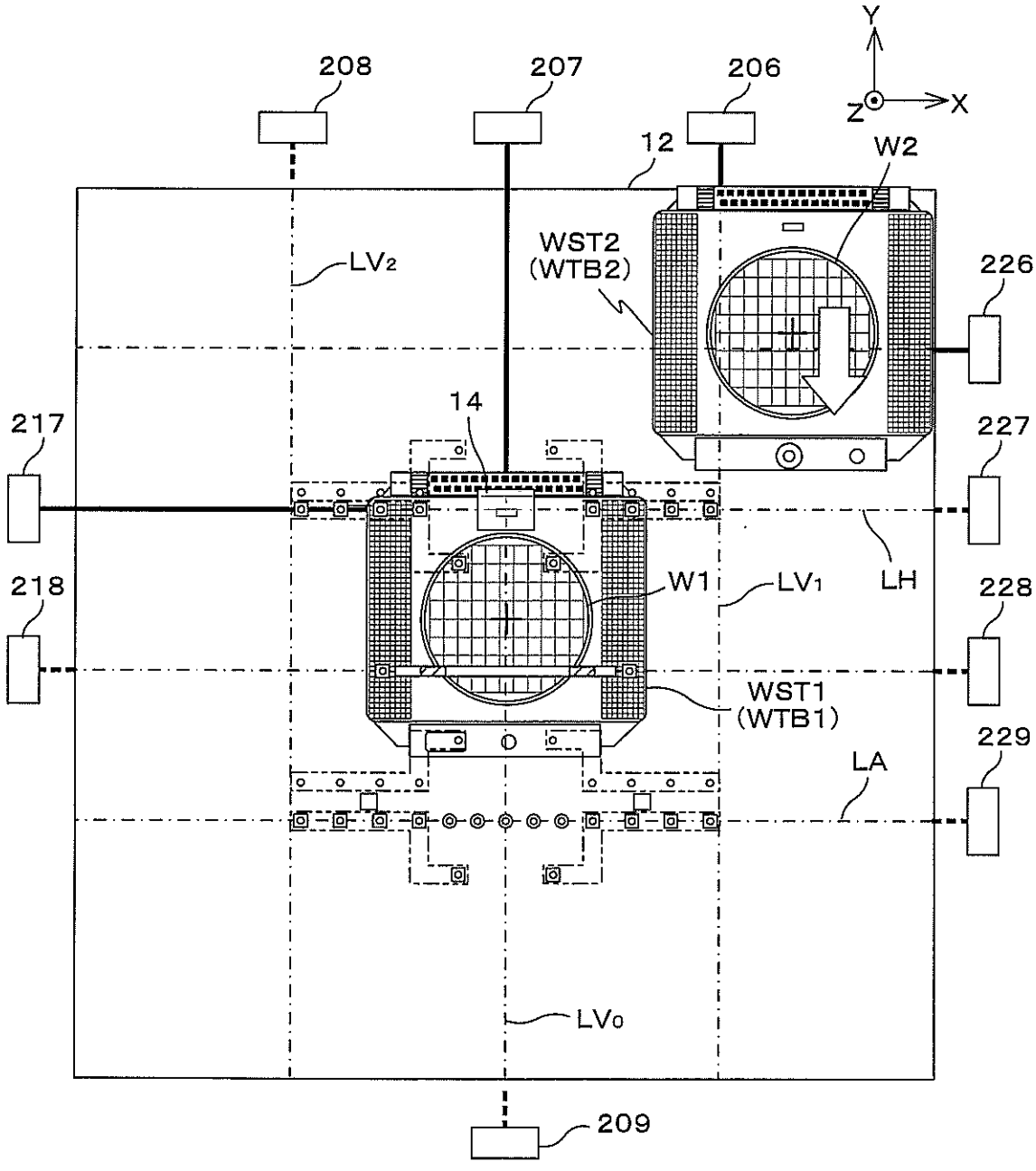
Y
Z
X
208
207
206
12
W2
WST2
(WTB2)
LV2
226
14
217
227
W1
LV1
LH
218
228
WST1
(WTB1)
229
LA
LV0
209

Fig. 60

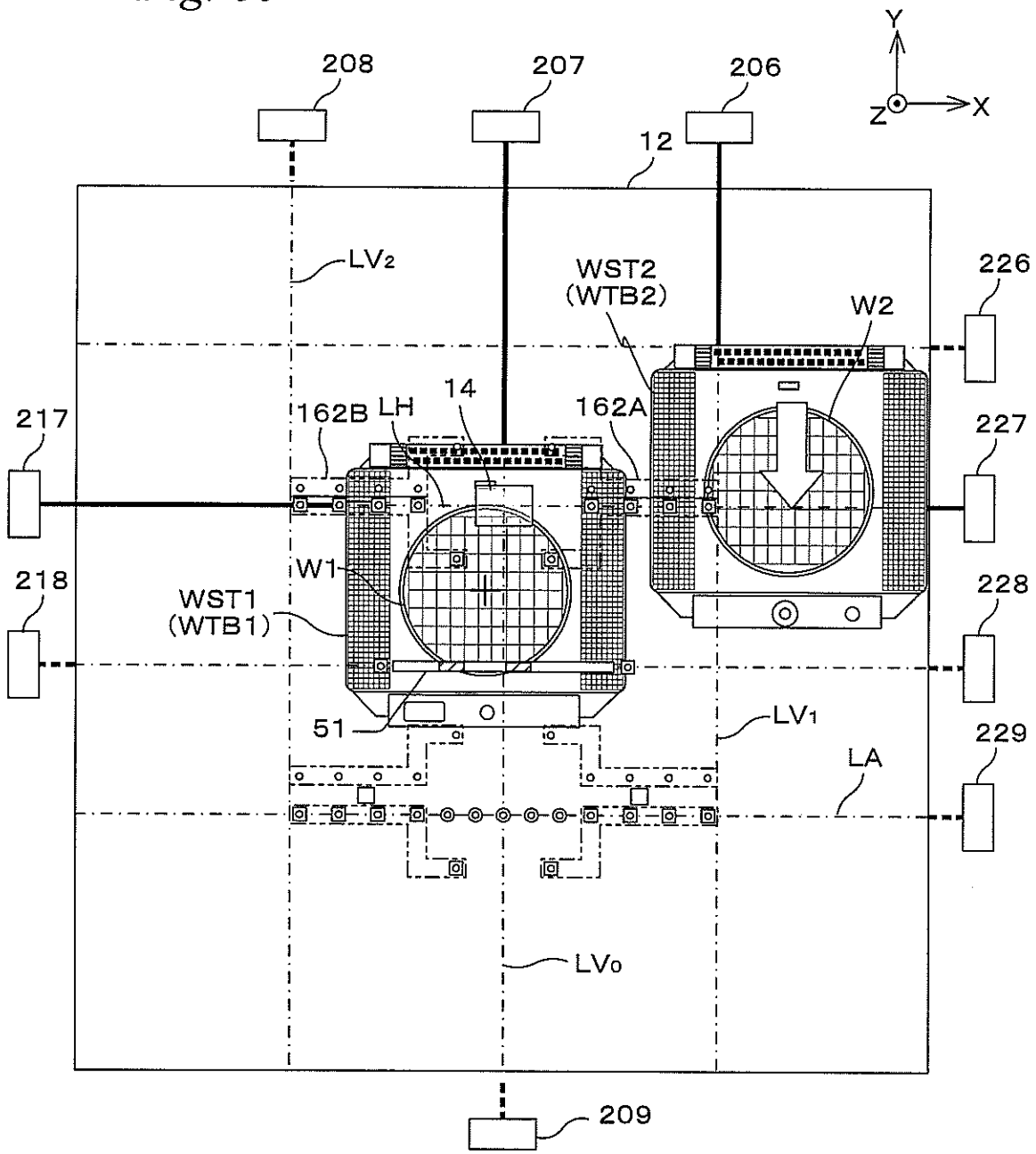
Y
X
Z
208
207
206
12
LV2
WST2
(WTB2)
W2
226
217
162B
LH
14
162A
227
W1
218
WST1
(WTB1)
228
51
LV1
229
LA
LV0
209

Fig. 61

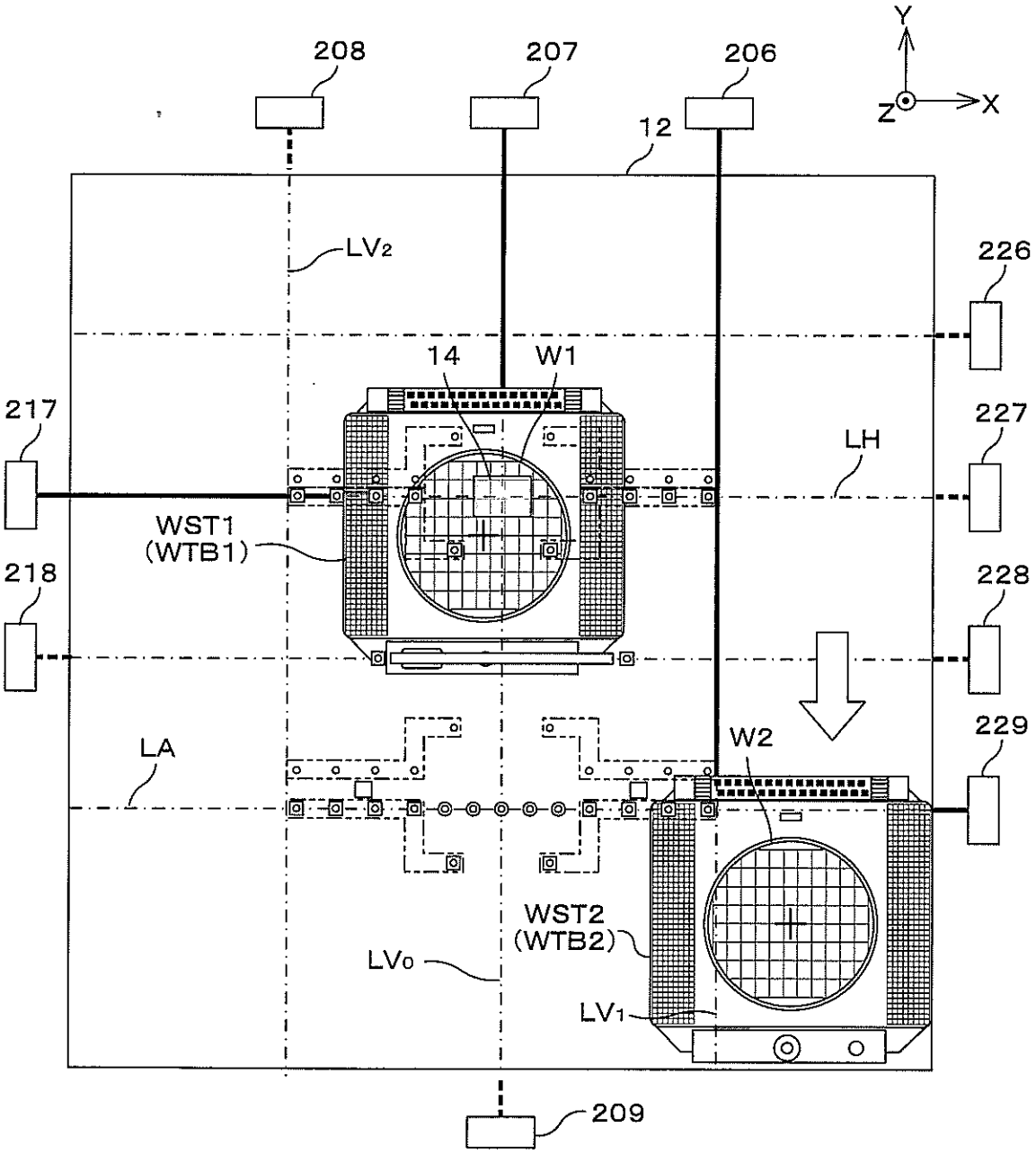
208
207
206
Y
Z
X
12
LV2
226
14
W1
217
227
LH
WST1
(WTB1)
218
228
LA
W2
229
WST2
(WTB2)
LV0
LV1
209

Fig. 62

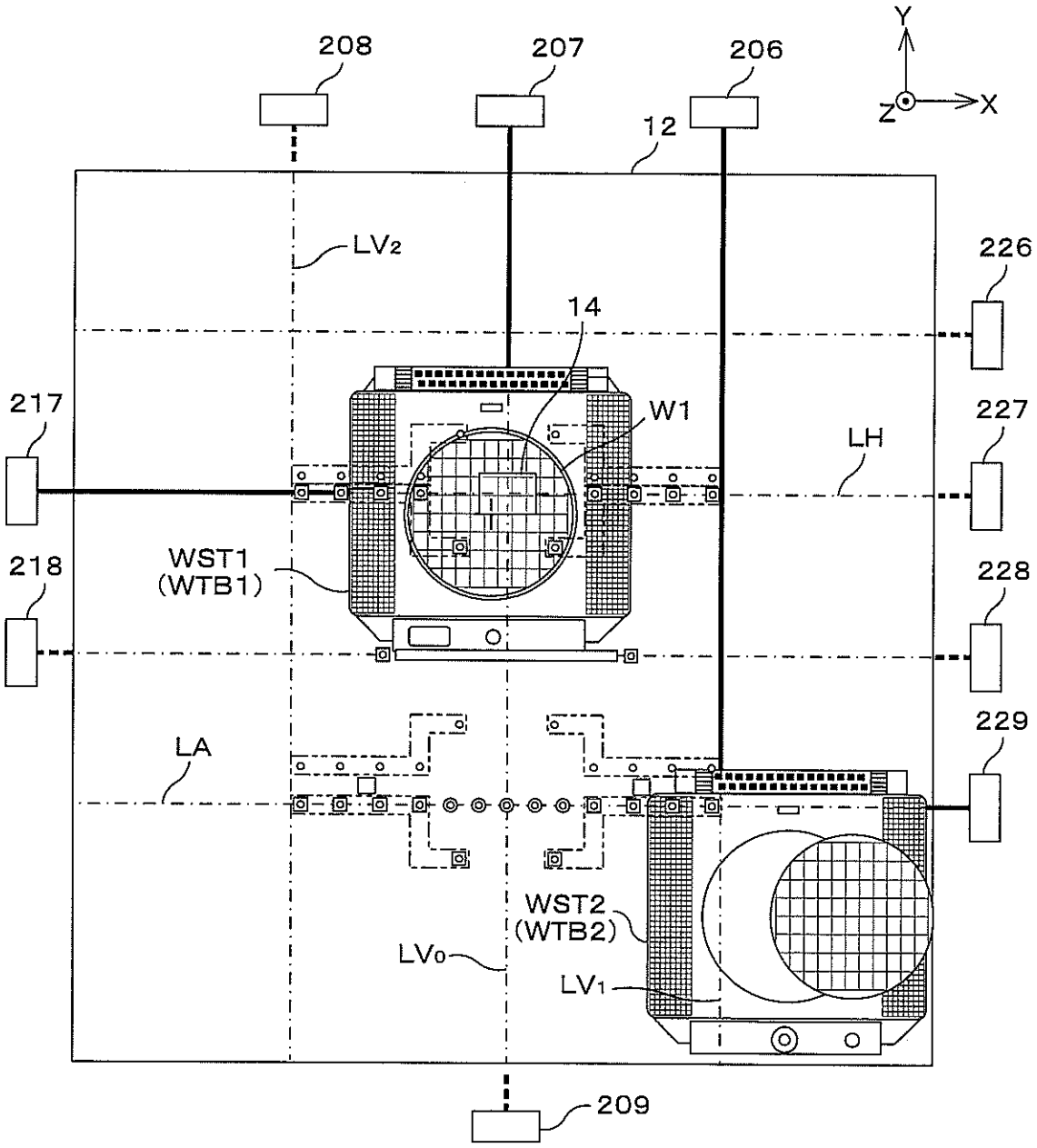
208
207
206
Y
Z
X
12
LV2
226
14
217
W1
227
LH
WST1
(WTB1)
218
228
LA
229
WST2
(WTB2)
LV0
LV1
209

Fig. 63

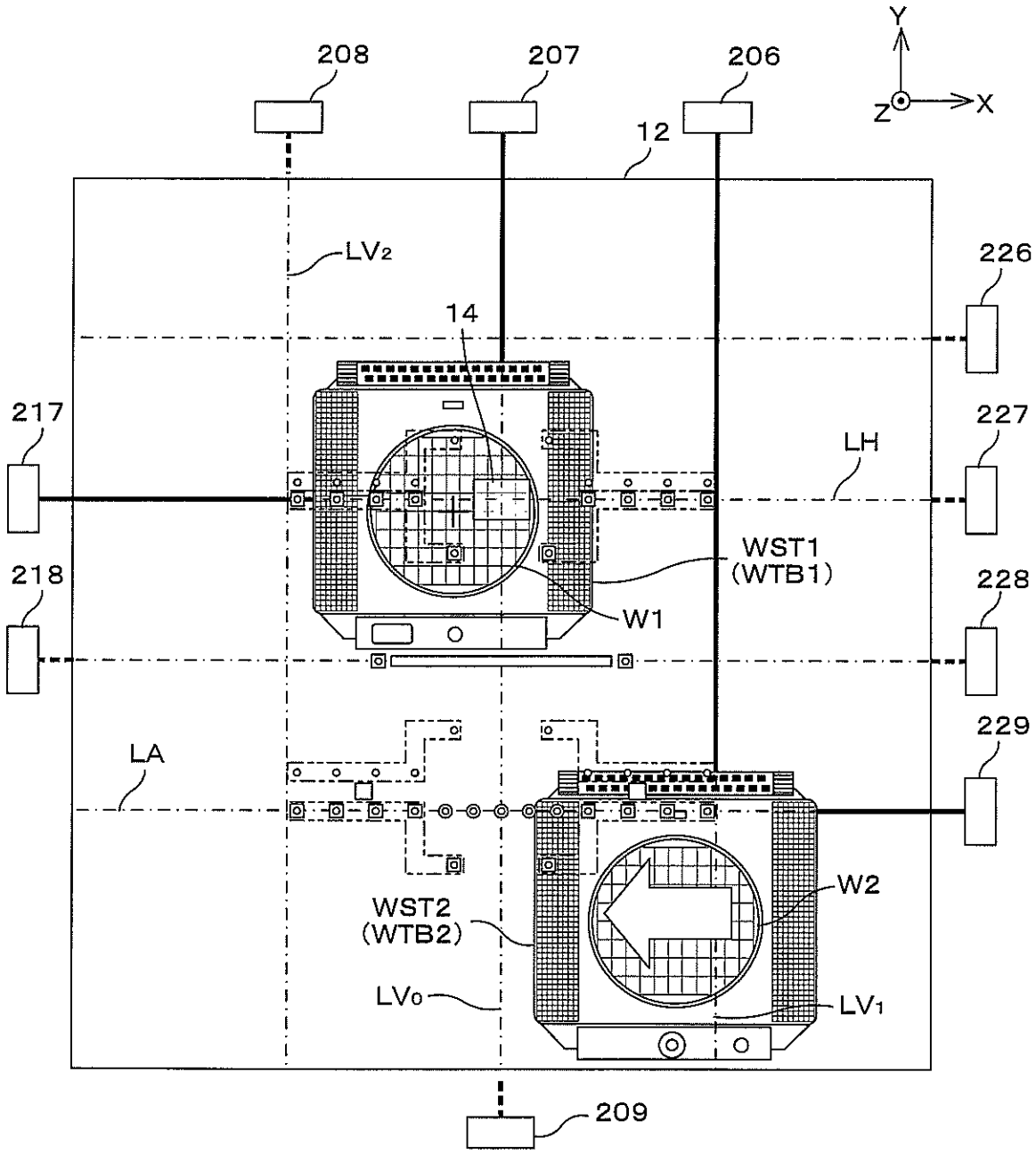
Y
Z
X
208
207
206
12
LV2
226
14
217
227
LH
WST1
(WTB1)
218
W1
228
229
LA
W2
WST2
(WTB2)
LV0
LV1
209

Fig. 64

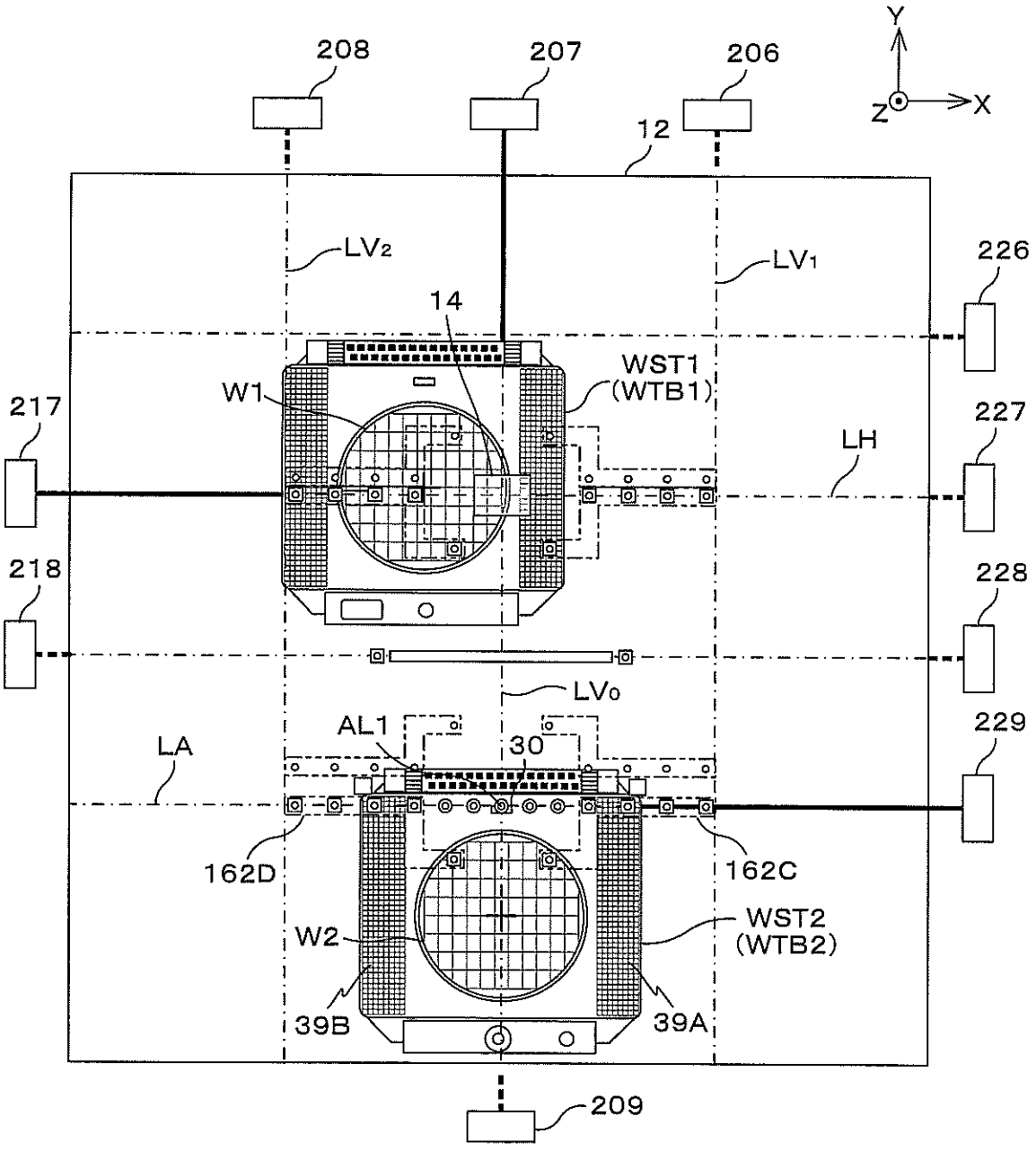
208
207
206
Y
Z
X
12
LV2
LV1
226
14
WST1
(WTB1)
W1
217
227
LH
218
228
LV0
AL1
30
229
LA
162D
162C
W2
WST2
(WTB2)
39B
39A
209

Fig. 65

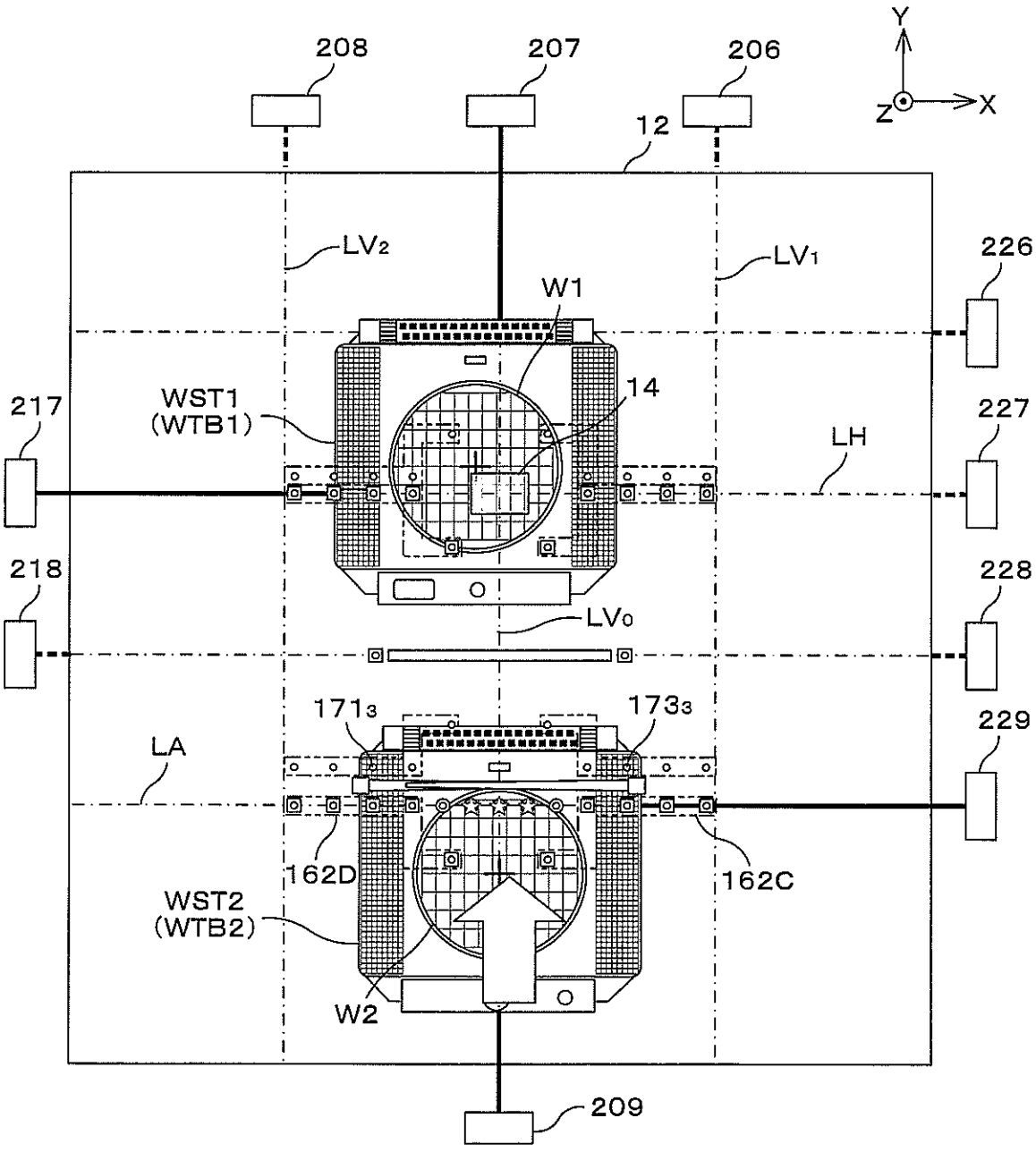
208
207
206
Y
Z
X
12
LV2
LV1
226
W1
14
217
WST1
(WTB1)
227
LH
218
228
LV0
171₃
173₃
229
LA
162D
162C
WST2
(WTB2)
W2
209

Fig. 66

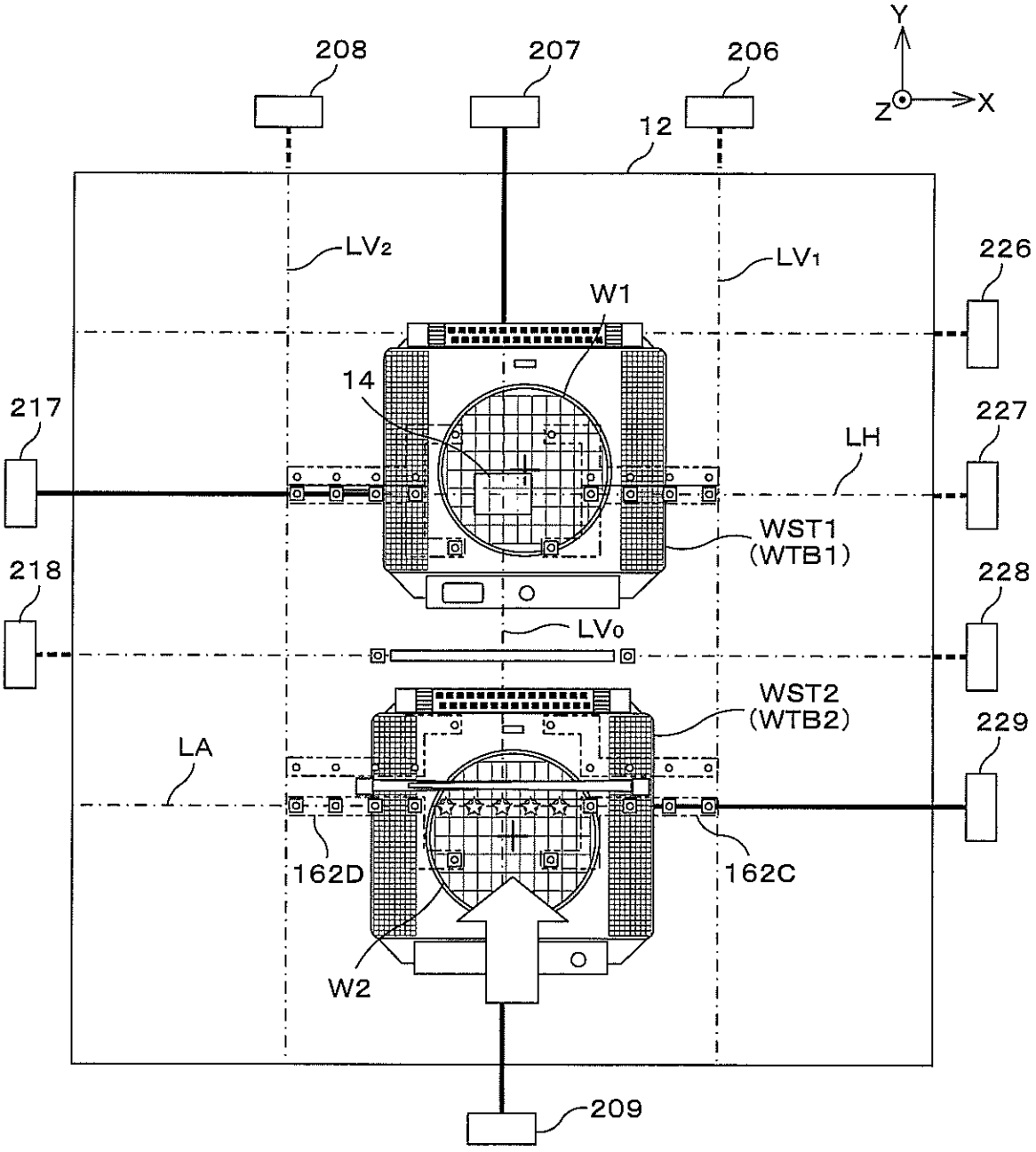
208
207
206
Y
Z
X
12
LV2
LV1
226
W1
14
217
227
LH
WST1
(WTB1)
218
228
LV0
WST2
(WTB2)
229
LA
162D
162C
W2
209

Fig. 67

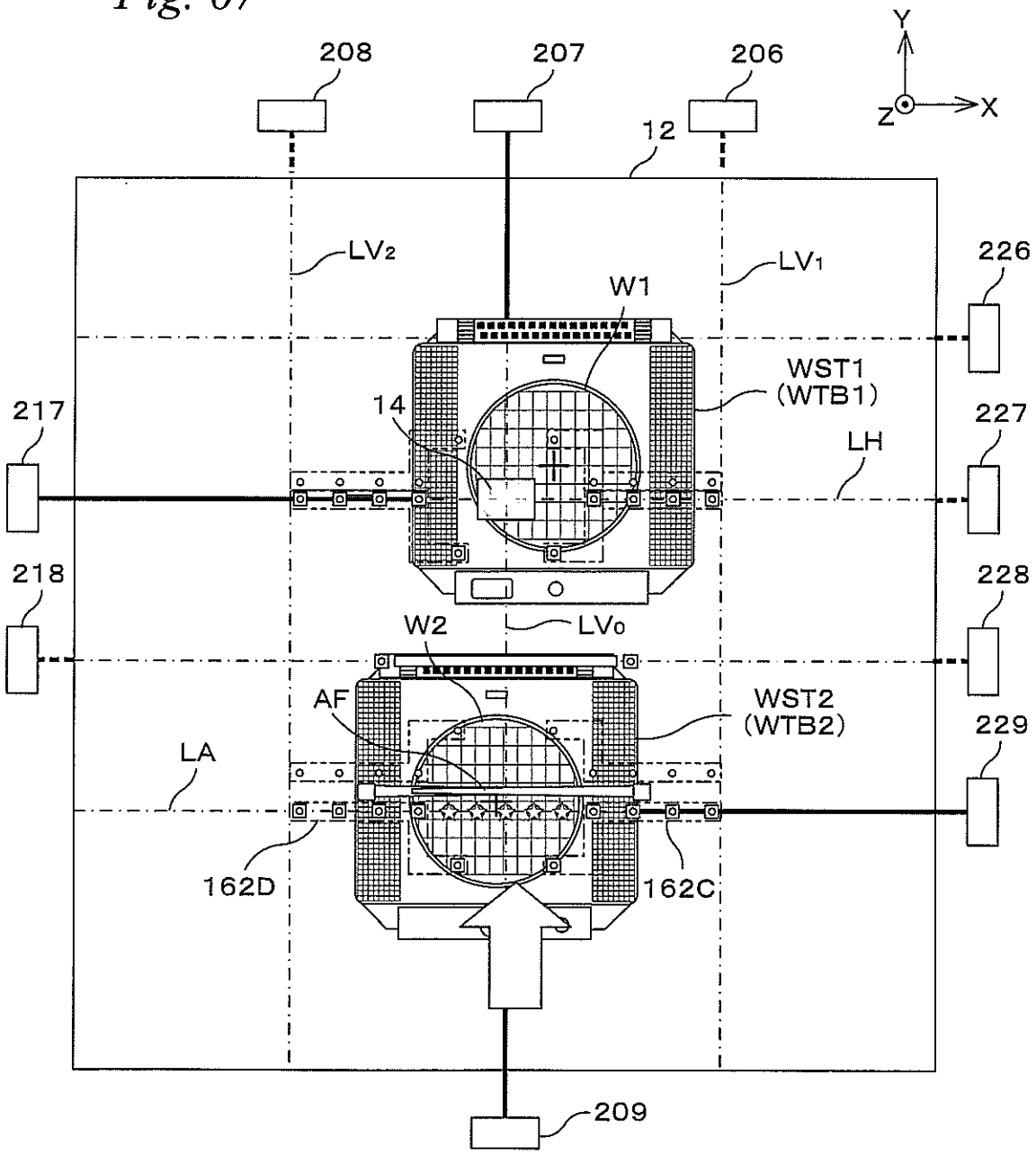
208
207
206
Y
Z
X
12
LV2
LV1
226
W1
WST1
(WTB1)
217
14
227
LH
218
228
W2
LV0
AF
WST2
(WTB2)
229
LA
162D
162C
209

Fig. 68

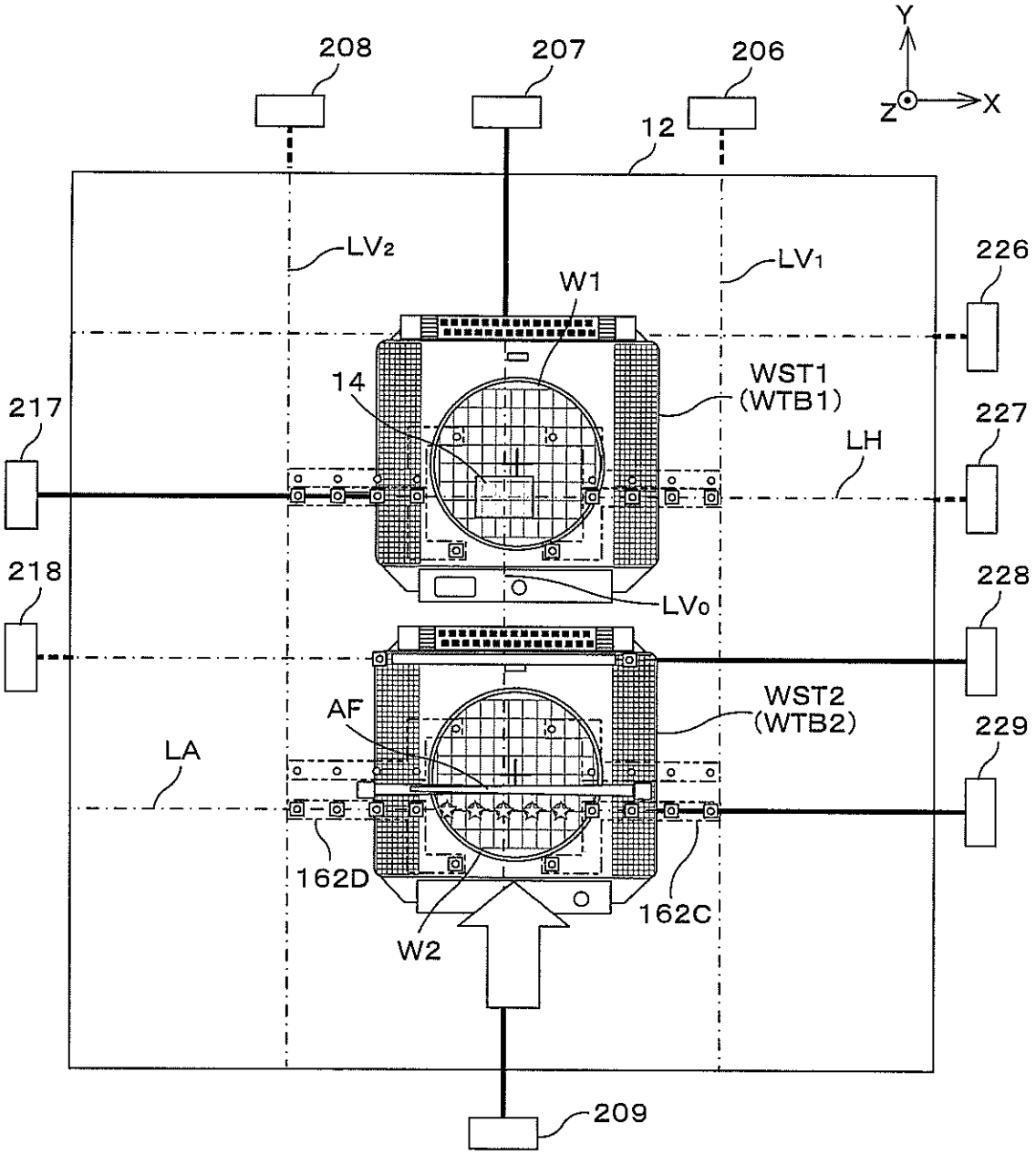
208
207
206
Y
Z
X
12
LV2
LV1
226
W1
14
WST1
(WTB1)
217
227
LH
218
228
LV0
AF
WST2
(WTB2)
229
LA
162D
162C
W2
209

Fig. 69

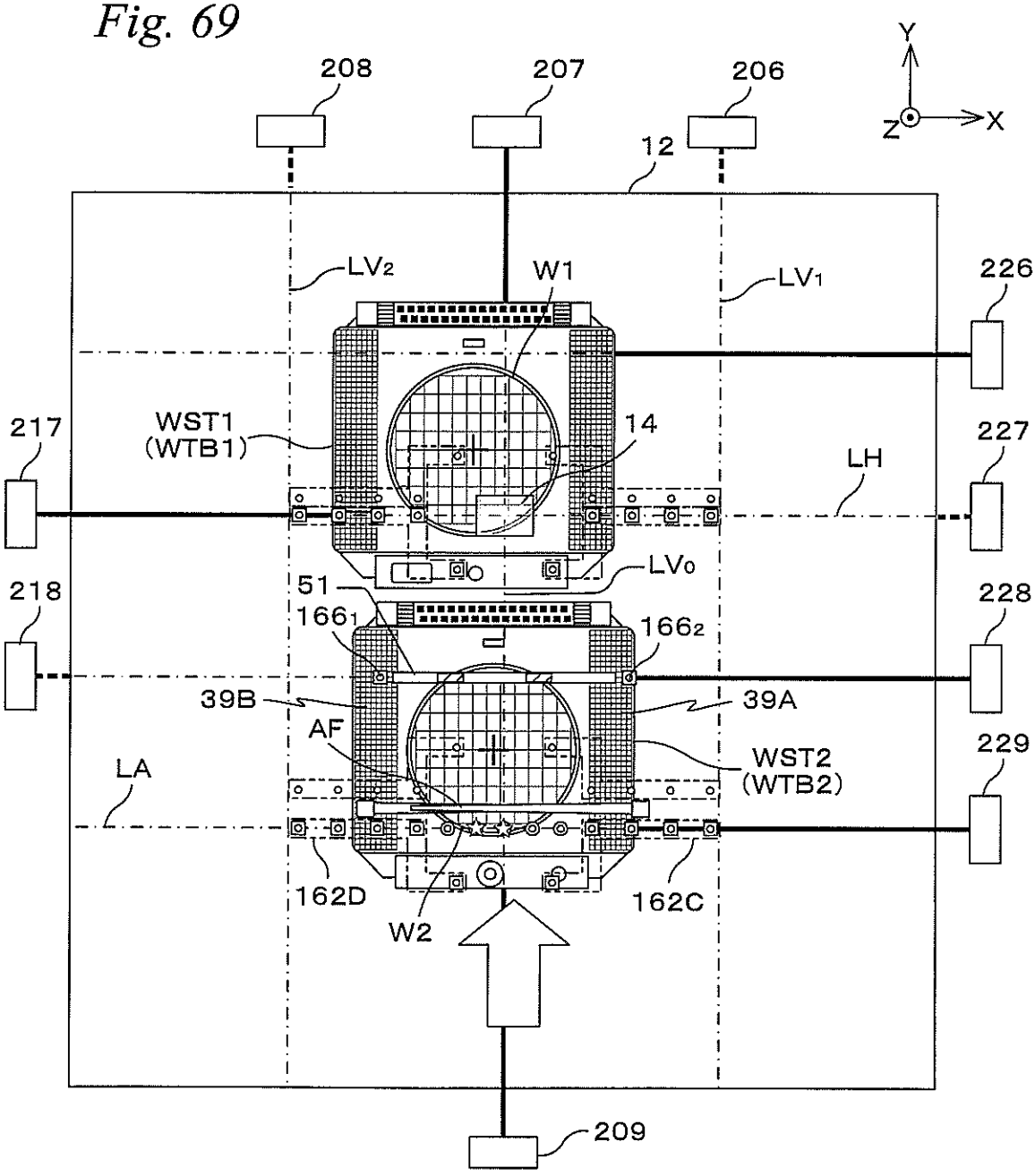
208
207
206
Y
Z
X
12
LV2
W1
LV1
226
217
WST1
(WTB1)
14
227
LH
LV0
218
51
1661
1662
228
39B
39A
AF
229
LA
WST2
(WTB2)
162D
162C
W2
209

Fig. 70

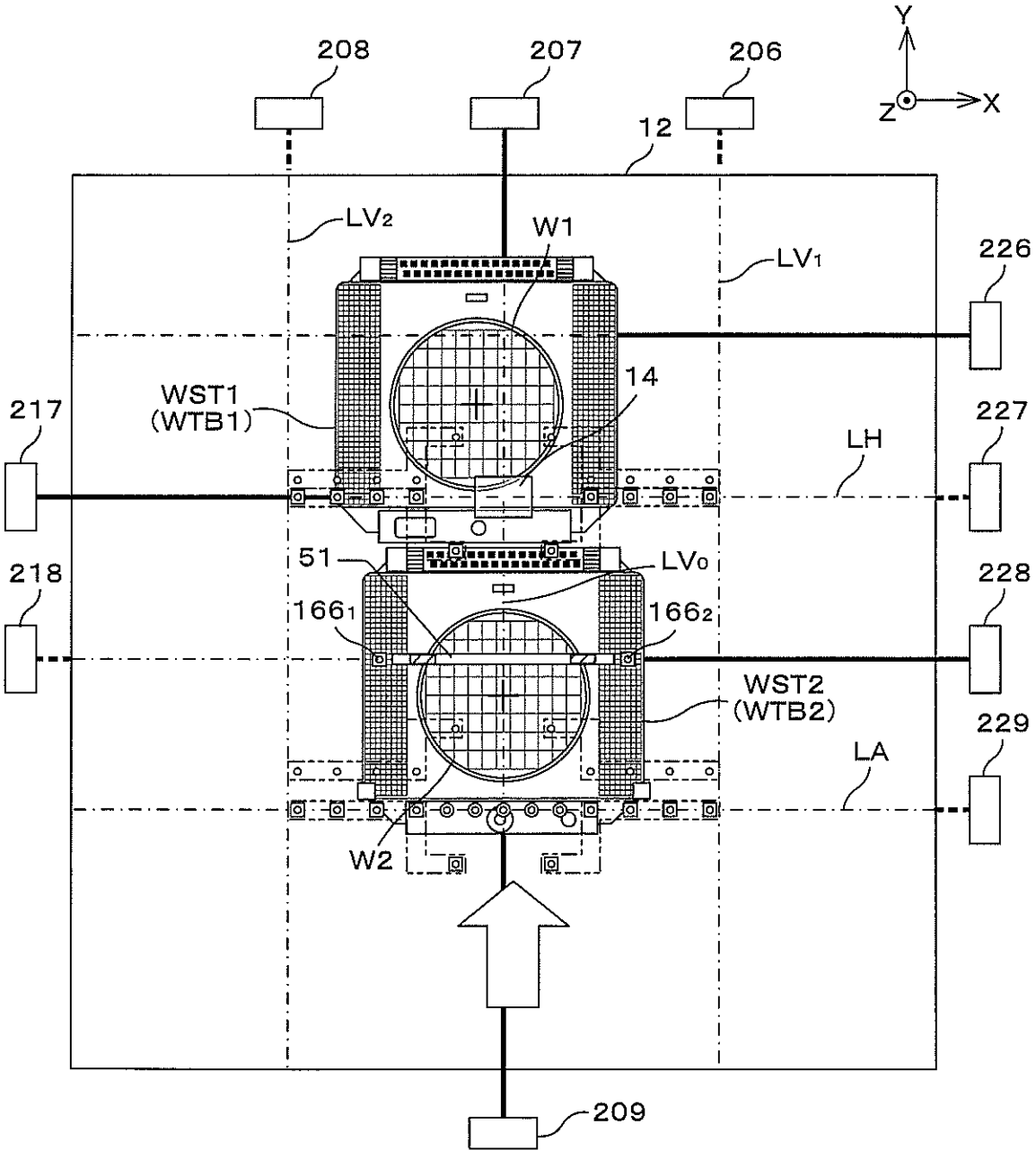
208
207
206
Y
Z
X
12
LV2
W1
LV1
226
WST1
(WTB1)
14
217
227
LH
51
LV0
218
228
166₁
166₂
WST2
(WTB2)
229
LA
W2
209

Fig. 71

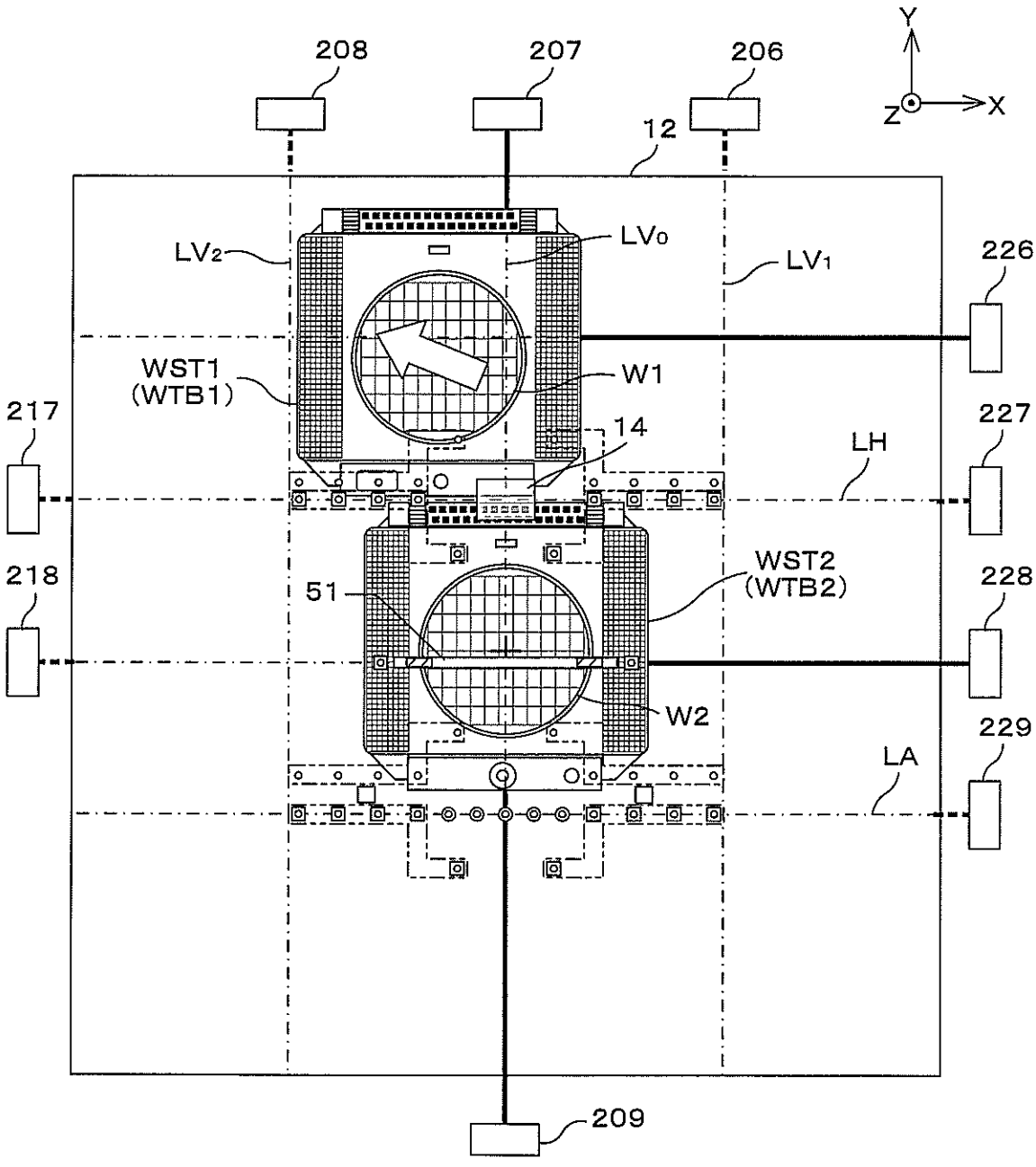
208
207
206
Y
Z
X
12
LV2
LV0
LV1
226
WST1
(WTB1)
W1
217
14
227
LH
218
51
WST2
(WTB2)
228
W2
229
LA
209

Fig. 72

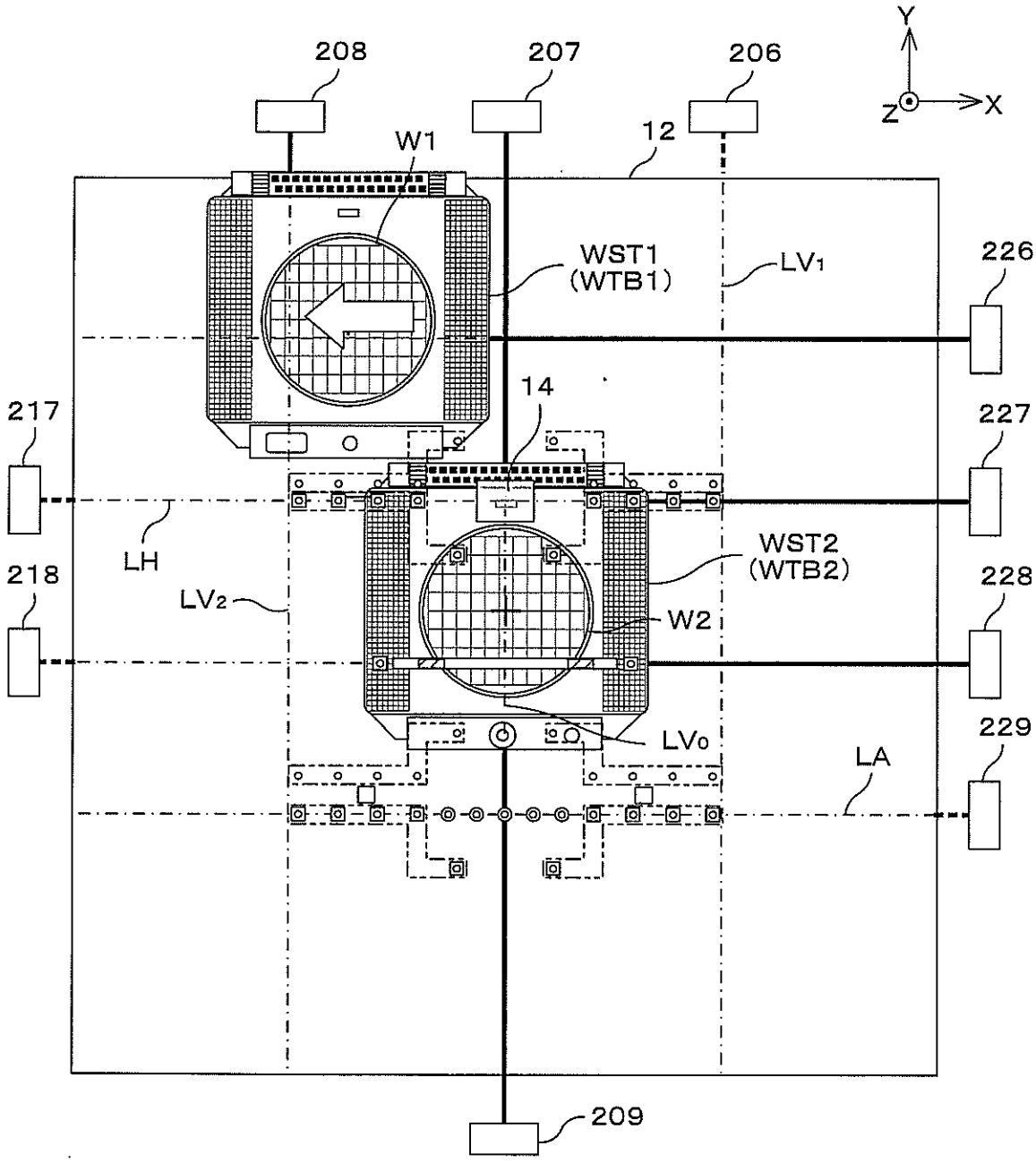
208
207
206
Y
Z
X
W1
12
WST1
(WTB1)
LV1
226
14
217
227
LH
WST2
(WTB2)
218
LV2
228
W2
LV0
229
LA
209

Fig. 73

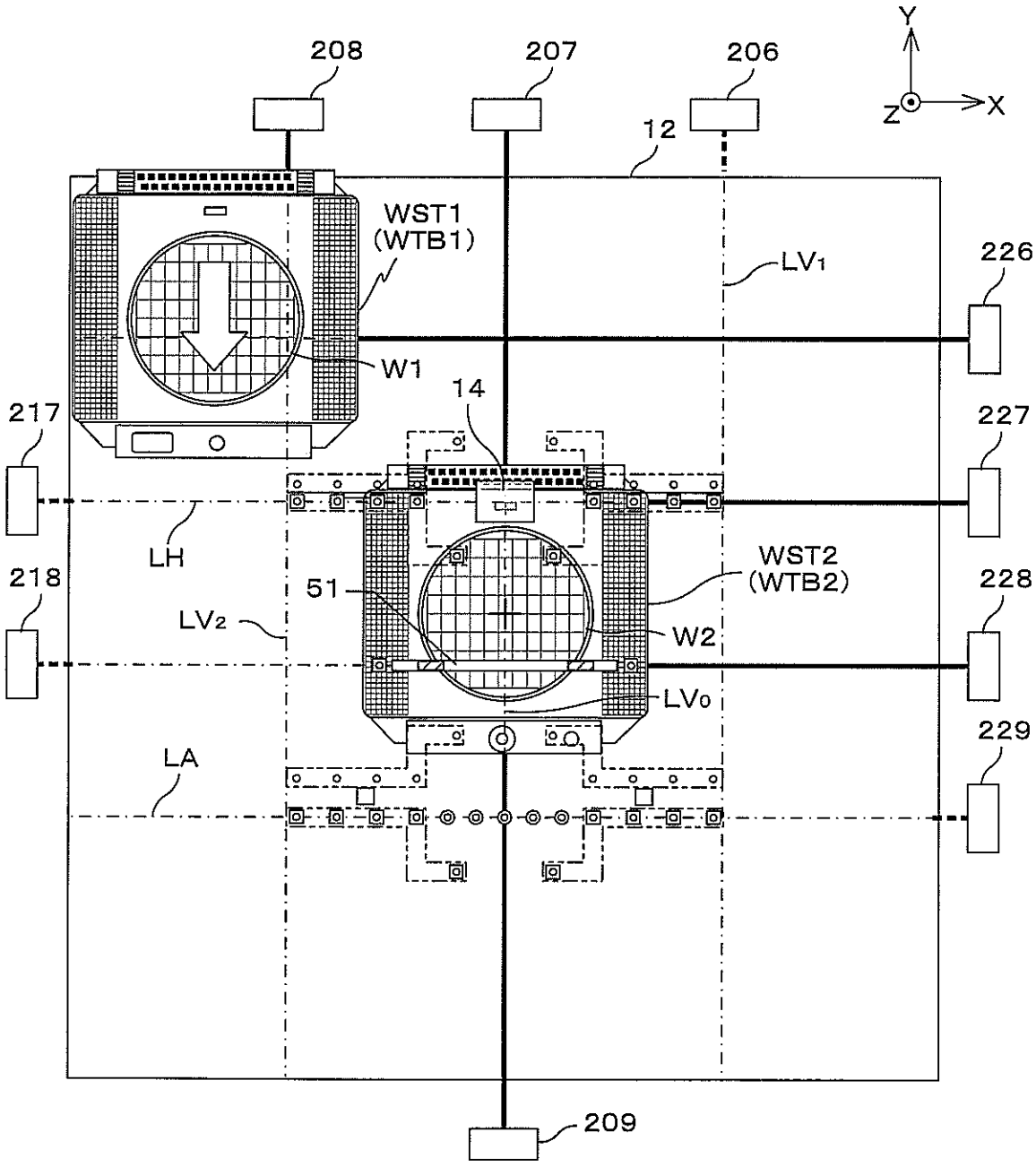
208
207
206
Y
Z
X
12
WST1
(WTB1)
LV1
226
W1
14
217
227
LH
WST2
(WTB2)
218
51
228
LV2
W2
LV0
229
LA
209

Fig. 74

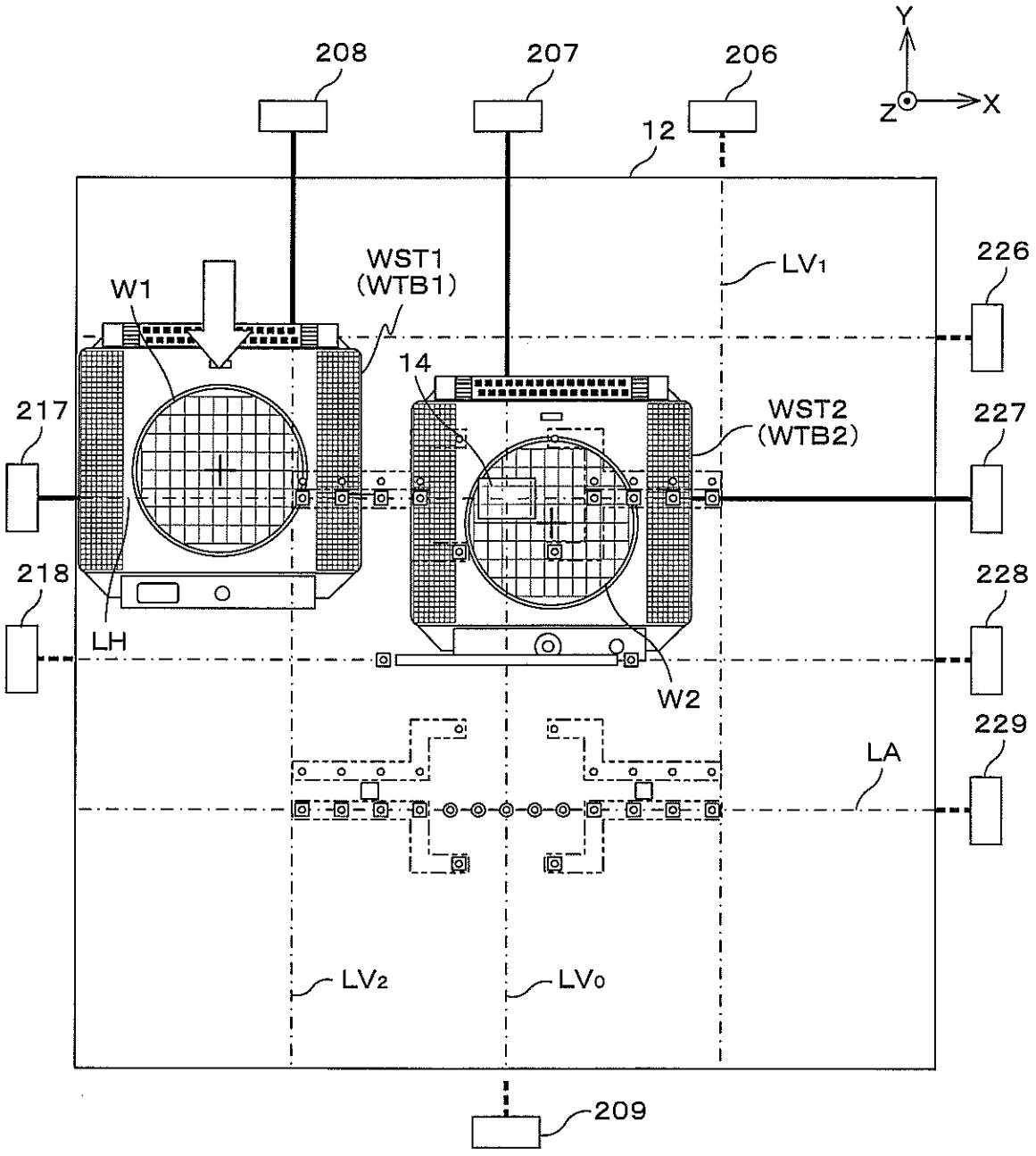
208
207
206
Y
Z
X
12
WST1
(WTB1)
W1
LV1
226
14
217
WST2
(WTB2)
227
218
228
LH
W2
229
LA
LV2
LV0
209

Fig. 75

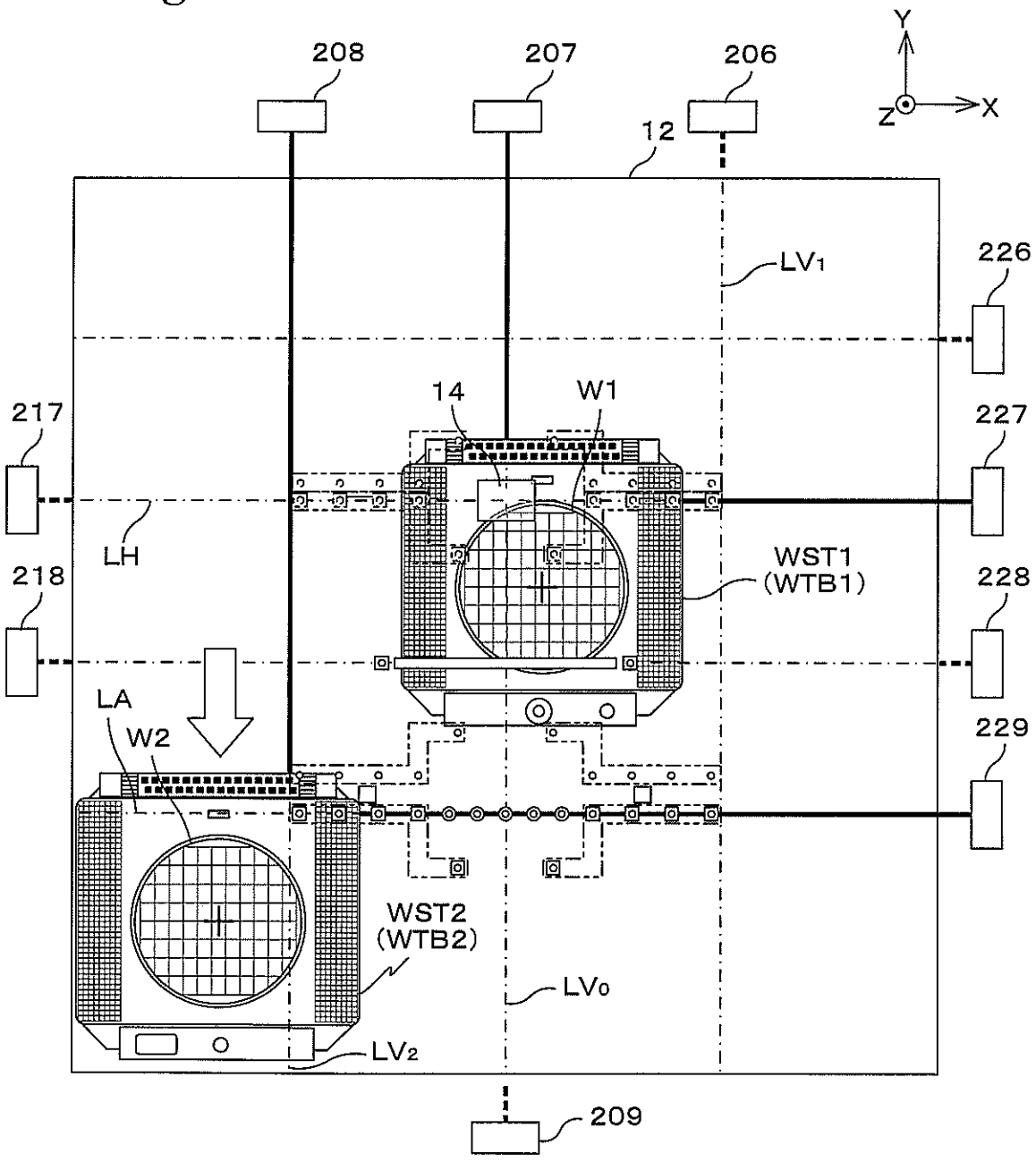
208
207
206
Y
Z
X
12
LV1
226
14
W1
217
227
LH
WST1
(WTB1)
218
228
LA
W2
229
WST2
(WTB2)
LV0
LV2
209

Fig. 76

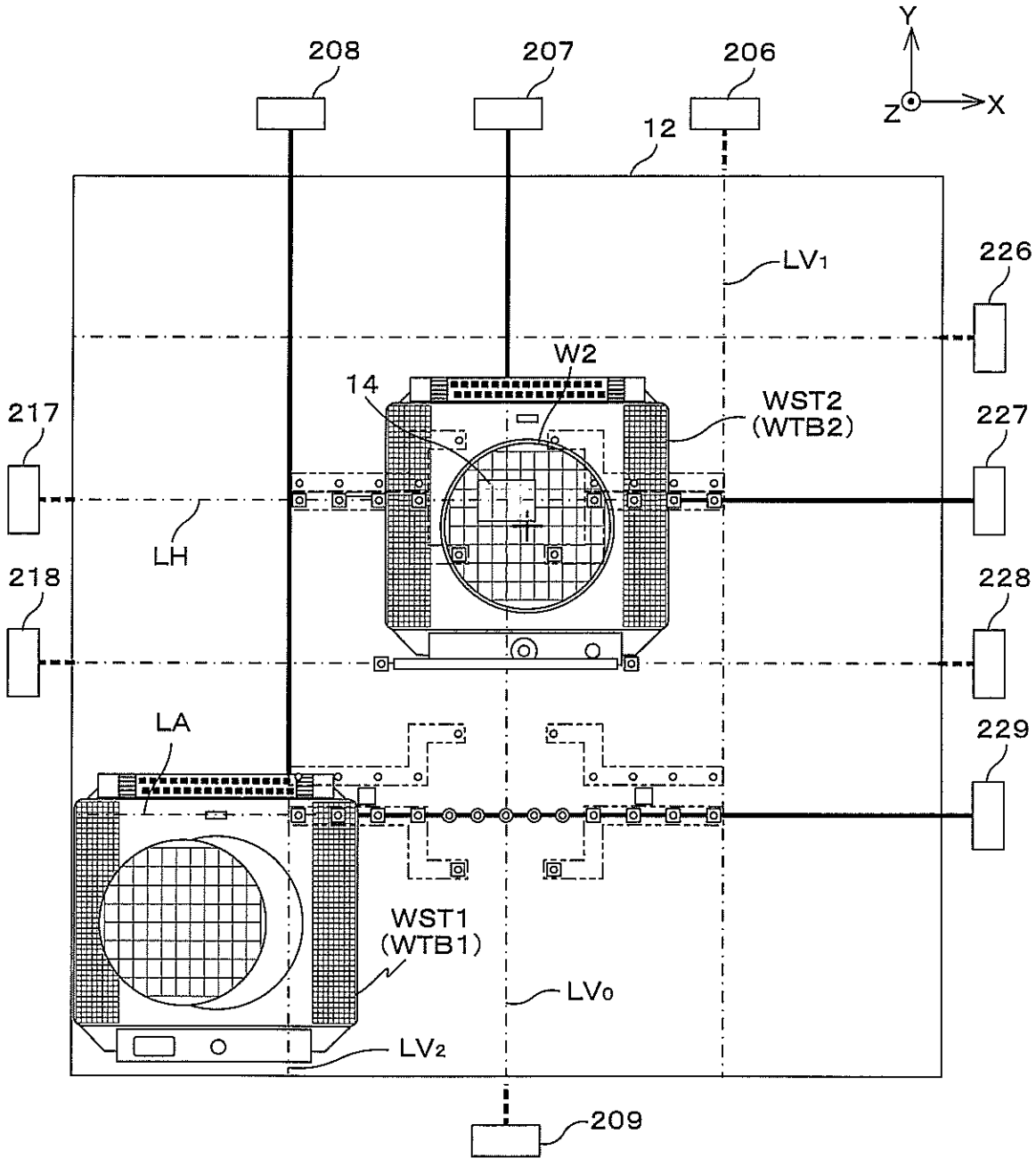
208
207
206
Y
Z
X
12
LV1
226
W2
14
WST2
(WTB2)
217
227
LH
218
228
LA
229
WST1
(WTB1)
LV0
LV2
209