FIG.1

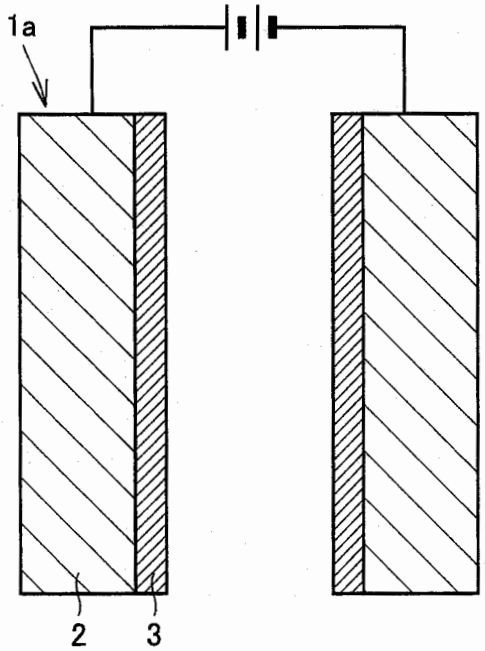

FIG.2

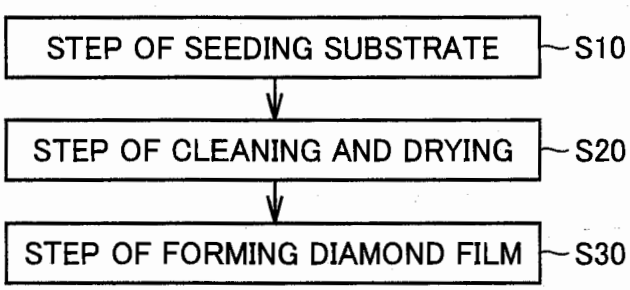

FIG.3

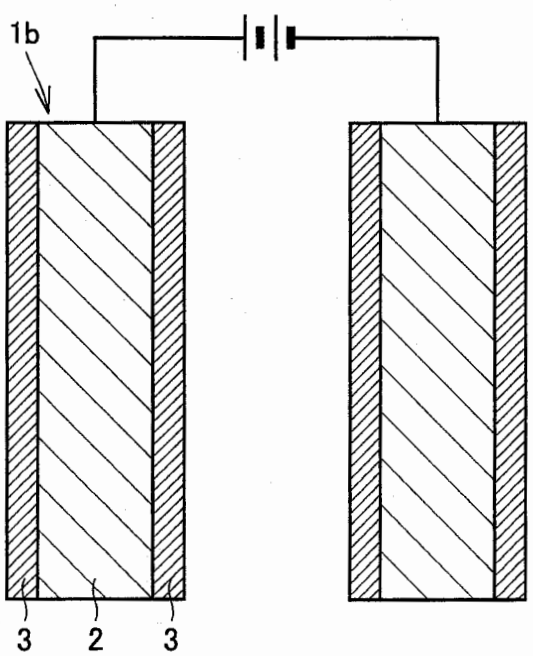

FIG.4

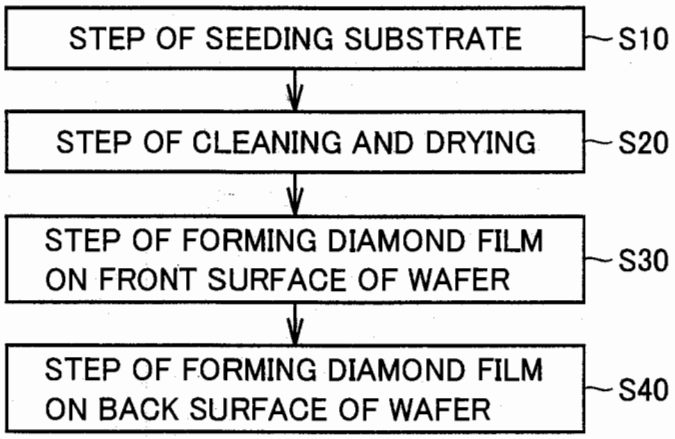
STEP OF SEEDING SUBSTRATE
S10
STEP OF CLEANING AND DRYING
S20
STEP OF FORMING DIAMOND FILM ON FRONT SURFACE OF WAFER
S30
STEP OF FORMING DIAMOND FILM ON BACK SURFACE OF WAFER
S40

FIG.5

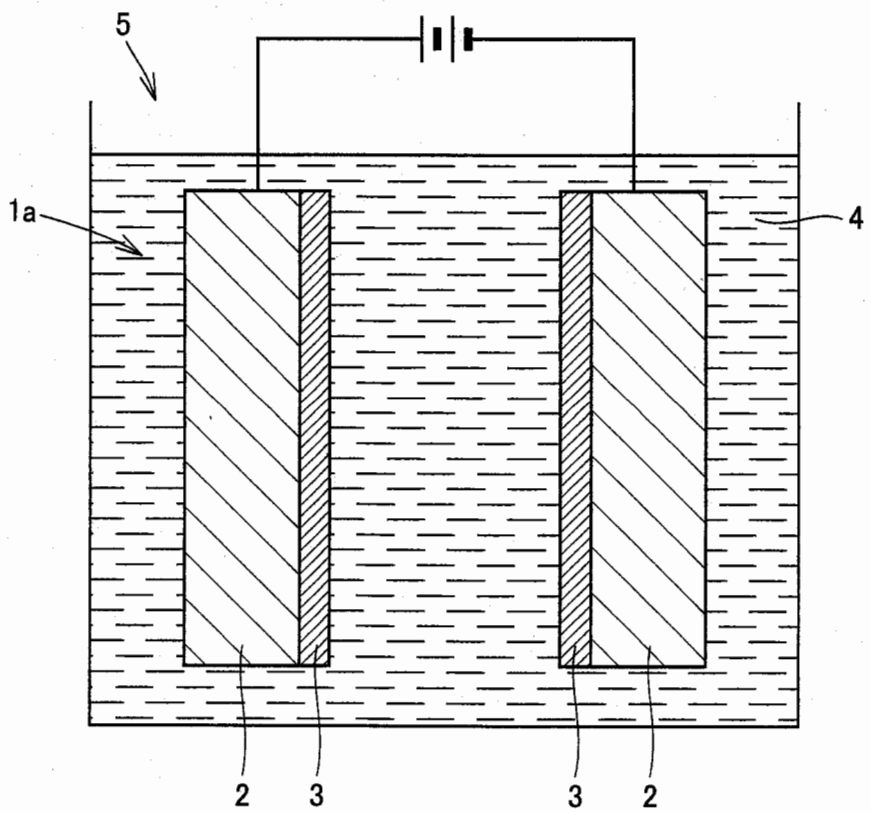
5
1a
4
2
3
3
2