(12) INTERNATIONAL APPLICATION PUBLISHED UNDER THE PATENT COOPERATION TREATY (PCT)

(19) World Intellectual Property Organization
International Bureau

(43) International Publication Date
19 April 2012 (19.04.2012)

PCT

(10) International Publication Number
WO 2012/048397 A1

(51) International Patent Classification:
E21C 47/02 (2006.01)

(21) International Application Number:
PCT/BR2011/000369

(22) International Filing Date:
14 August 2011 (14.08.2011)

(25) Filing Language: English

(26) Publication Language: English

(30) Priority Data:
61/393,063 14 October 2010 (14.10.2010) US

(71) Applicant *(for all designated States except US)*: **VALE S.A.** [BR/BR]; Avenida Graca Aranha, 26, Centro, CEP: 20030-900 - Rio De Janeiro, RJ (BR).

(72) Inventor; and

(75) Inventor/Applicant *(for US only)*: **CRUZ, Marcelo Menezes** [BR/BR]; Rua Honorina Machado, 136, Bairro Amazonas, Itabira -, MG -35900-729 - Brazil (BR).

(74) Agent: **VEIRANO E ADVOGADOS ASSOCIADOS**; Av. das Nações Unidas, nº 12.995, 18º andar, São Paulo - SP - 04578-000 (BR).

(81) Designated States *(unless otherwise indicated, for every kind of national protection available)*: AE, AG, AL, AM, AO, AT, AU, AZ, BA, BB, BG, BH, BR, BW, BY, BZ, CA, CH, CL, CN, CO, CR, CU, CZ, DE, DK, DM, DO, DZ, EC, EE, EG, ES, FI, GB, GD, GE, GH, GM, GT, HN, HR, HU, ID, IL, IN, IS, JP, KE, KG, KM, KN, KP, KR, KZ, LA, LC, LK, LR, LS, LT, LU, LY, MA, MD, ME, MG, MK, MN, MW, MX, MY, MZ, NA, NG, NI, NO, NZ, OM, PE, PG, PH, PL, PT, QA, RO, RS, RU, SC, SD, SE, SG, SK, SL, SM, ST, SV, SY, TH, TJ, TM, TN, TR, TT, TZ, UA, UG, US, UZ, VC, VN, ZA, ZM, ZW.

(84) Designated States *(unless otherwise indicated, for every kind of regional protection available)*: ARIPO (BW, GH, GM, KE, LR, LS, MW, MZ, NA, SD, SL, SZ, TZ, UG, ZM, ZW), Eurasian (AM, AZ, BY, KG, KZ, MD, RU, TJ, TM), European (AL, AT, BE, BG, CH, CY, CZ, DE, DK, EE, ES, FI, FR, GB, GR, HR, HU, IE, IS, IT, LT, LU, LV, MC, MK, MT, NL, NO, PL, PT, RO, RS, SE, SI, SK, SM, TR), OAPI (BF, BJ, CF, CG, CI, CM, GA, GN, GQ, GW, ML, MR, NE, SN, TD, TG).

Published:

— *with international search report (Art. 21(3))*

(54) **Title**: RECLAIMER MACHINE

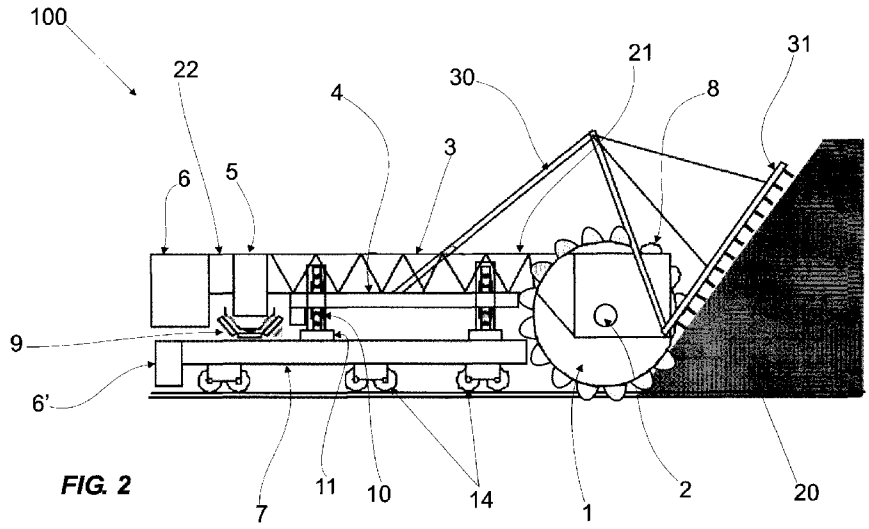

FIG. 2

(57) **Abstract**: This document describes a reclaimer machine (100) for reclaiming and homogenizing materials such as ore, coal and others, stock-piled in yards. The reclaimer machine (100) comprising a bucket wheel (1) which includes a series of buckets (8) rotating a shaft (2), a conveyor belt (3) connected to the bucket wheel (1) and to a transfer chute (5), the conveyor belt (3) being supported by a mobile upper platform (4) which moves laterally to a pile on tracks attached to a mobile lower platform (7), wherein a first end of the conveyor belt (21) structure is connected to the bucket wheel (1) and another end of the conveyor belt structure (3) is connected to a counterweight' (6) which maintains the balance of the reclaimer machine (100) and supports the bucket wheel (1), upper platform (4) and lower platform (7) movements.

WO 2012/048397 A1