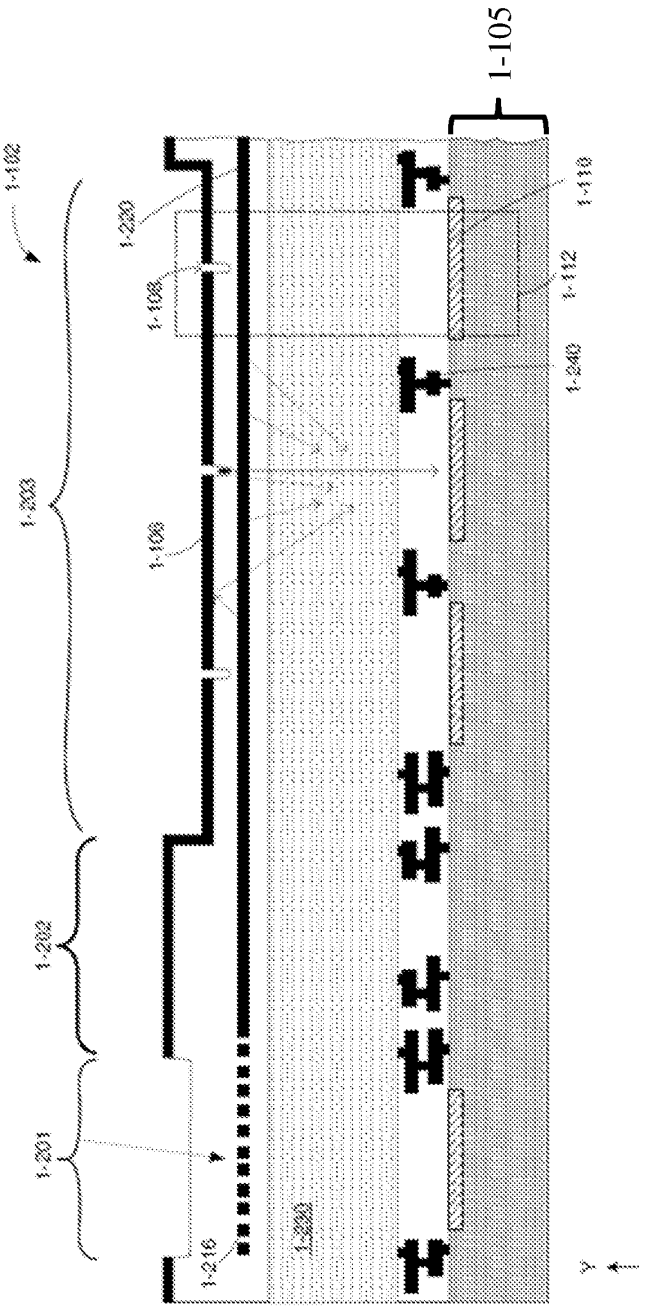
1-105
1-102
1-200
1-108
1-110
1-112
1-240
1-203
1-106
1-202
1-201
1-216
1-300
Y

FIG. 1-1A

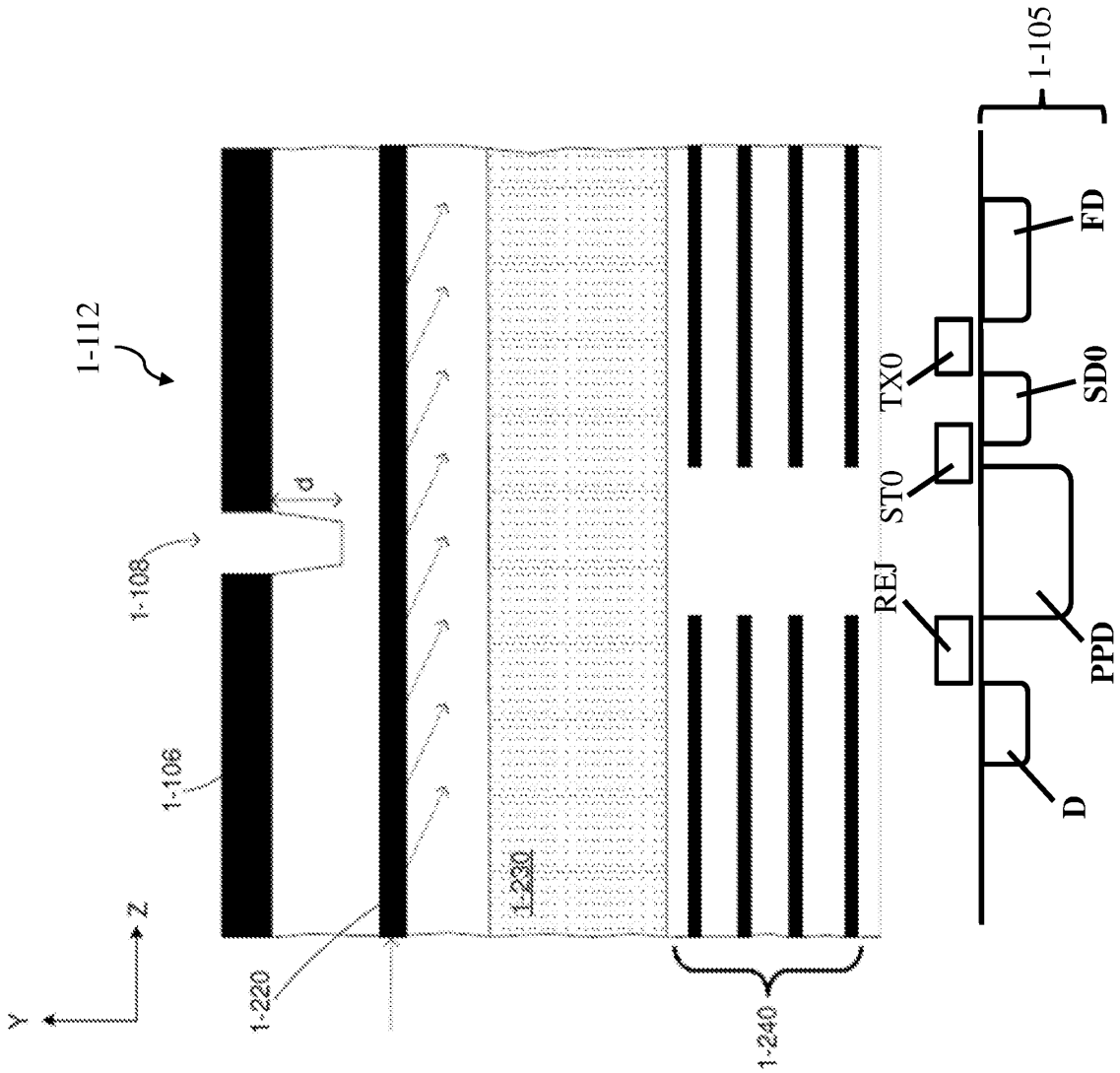

FIG. 1-1B

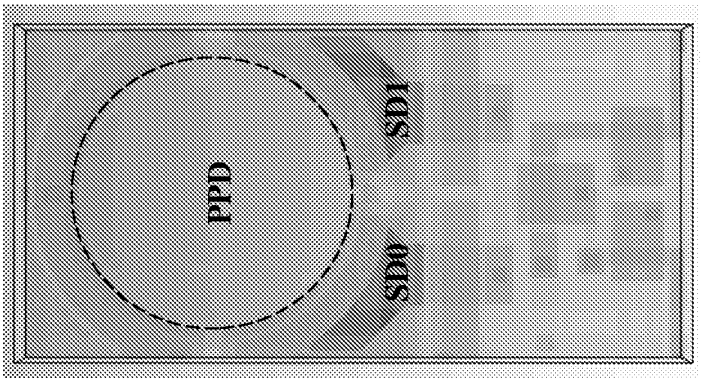

FIG. 1-1D

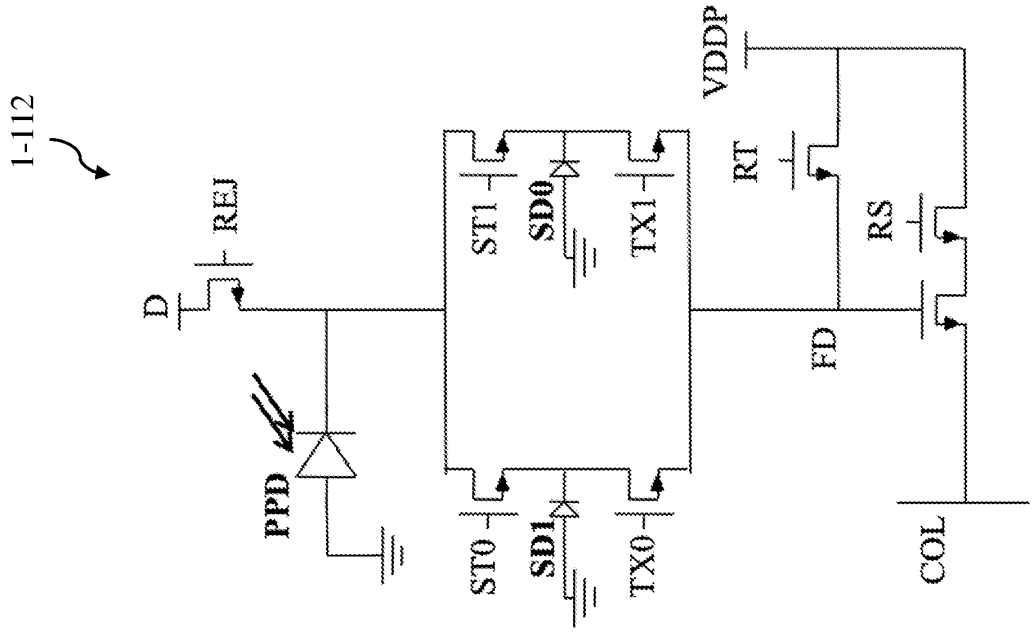

FIG. 1-1C

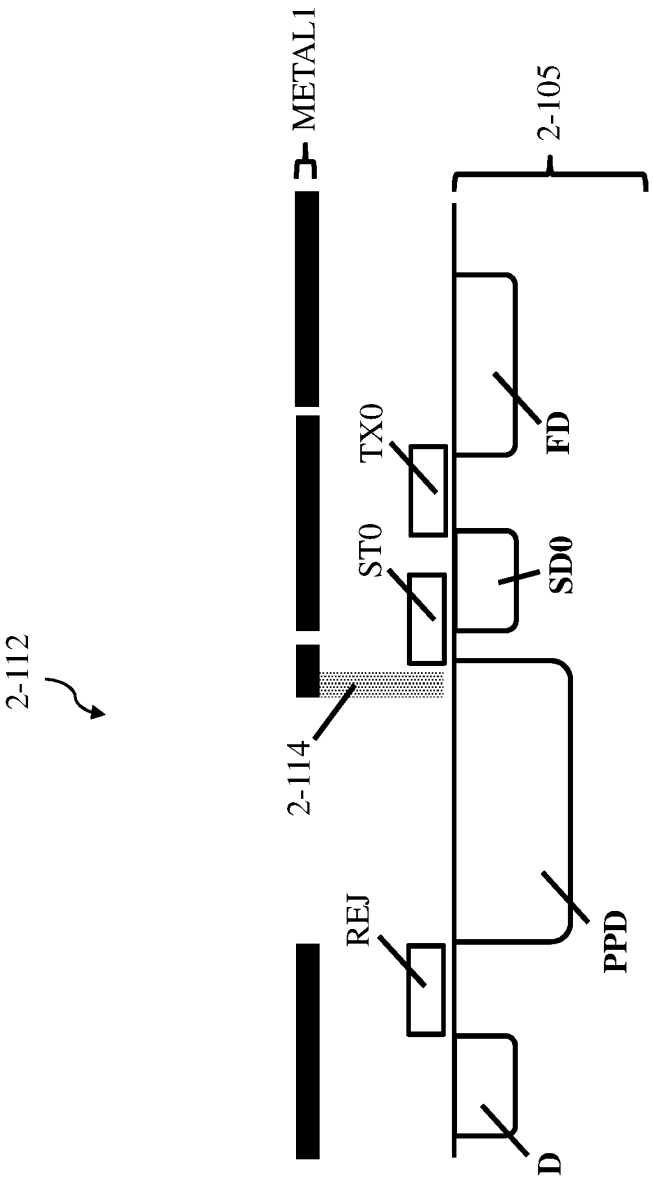

FIG. 2-1

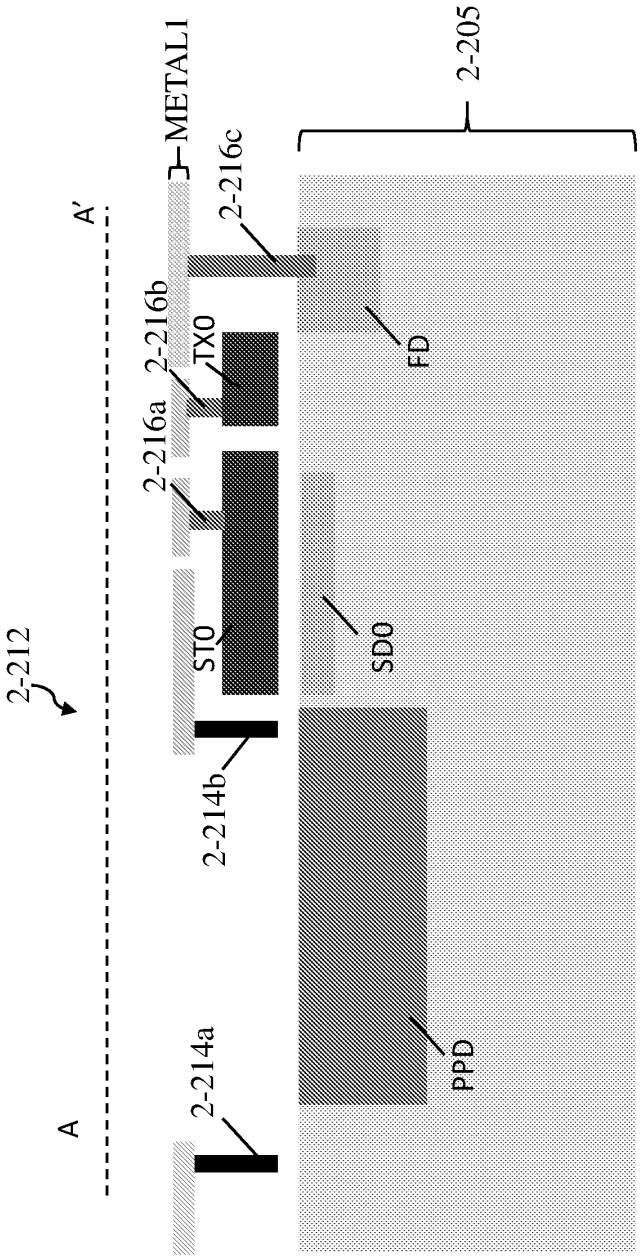
2-205
METAL1
2-216c
A'
2-216b
TX0
2-216a
FD
2-212
ST0
SD0
2-214b
PPD
2-214a
A

FIG. 2-2A

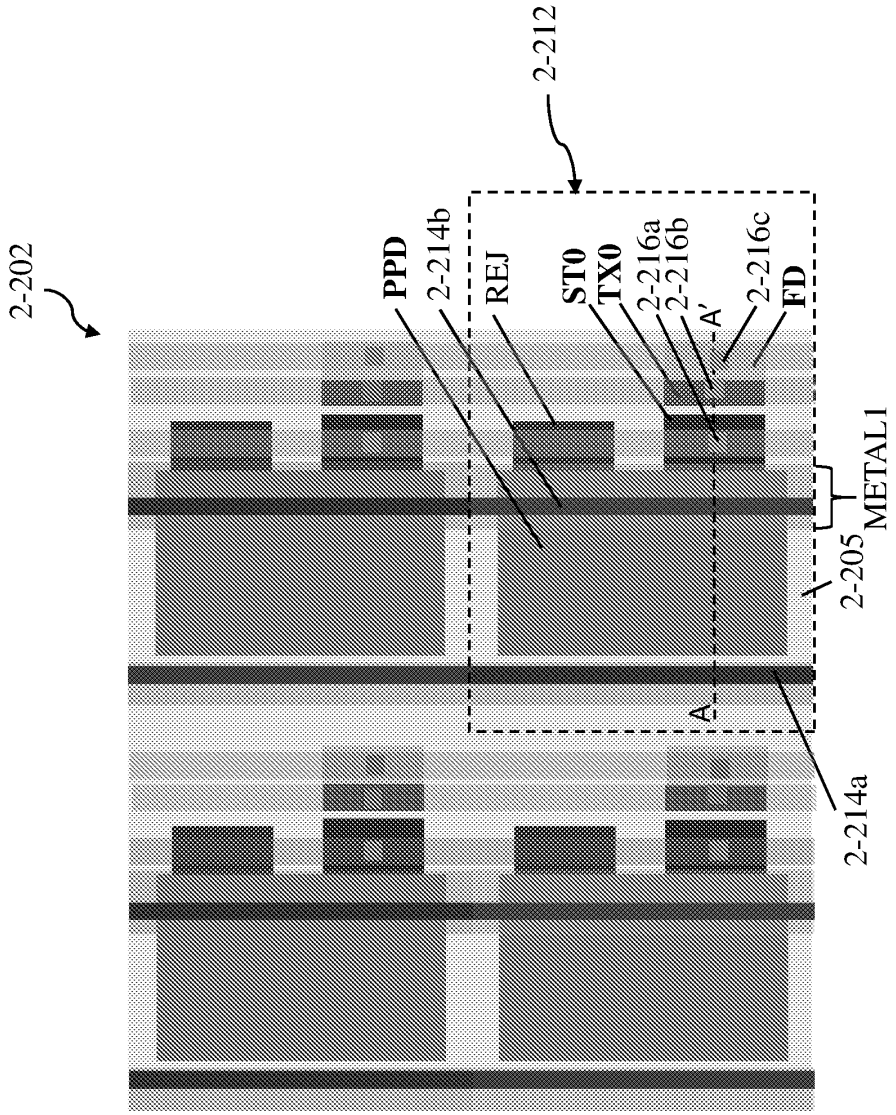
2-202
2-212
PPD
2-214b
REJ
ST0
TX0
2-216a
2-216b
A'
2-216c
FD
METAL1
2-205
A
2-214a

FIG. 2-2B

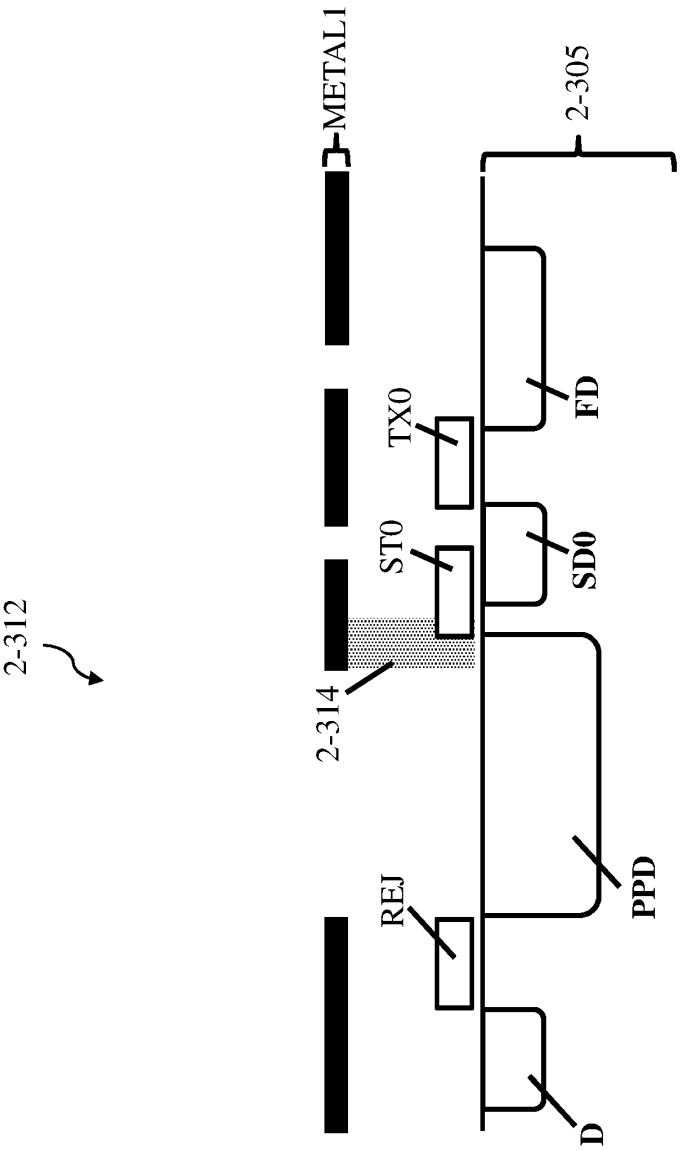

FIG. 2-3

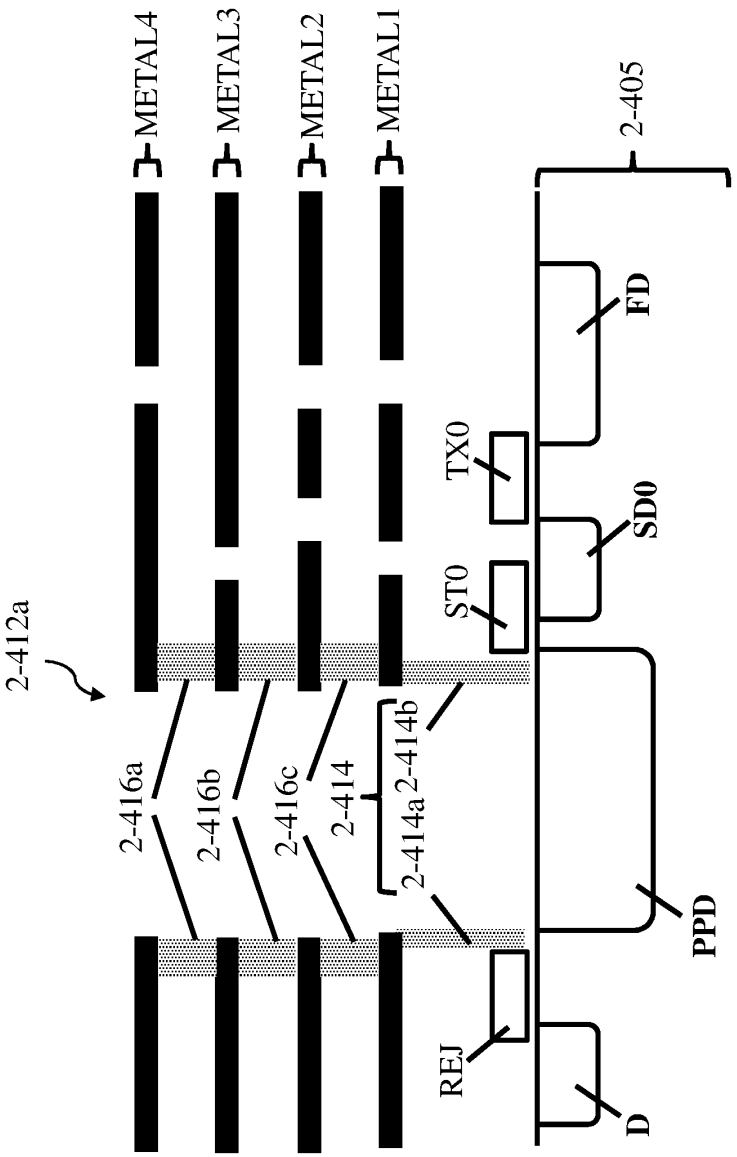
METAL4
METAL3
METAL2
METAL1
2-405
FD
TX0
SD0
ST0
2-412a
2-416a
2-416b
2-416c
2-414
2-414a
2-414b
PPD
REJ
D

FIG. 2-4A

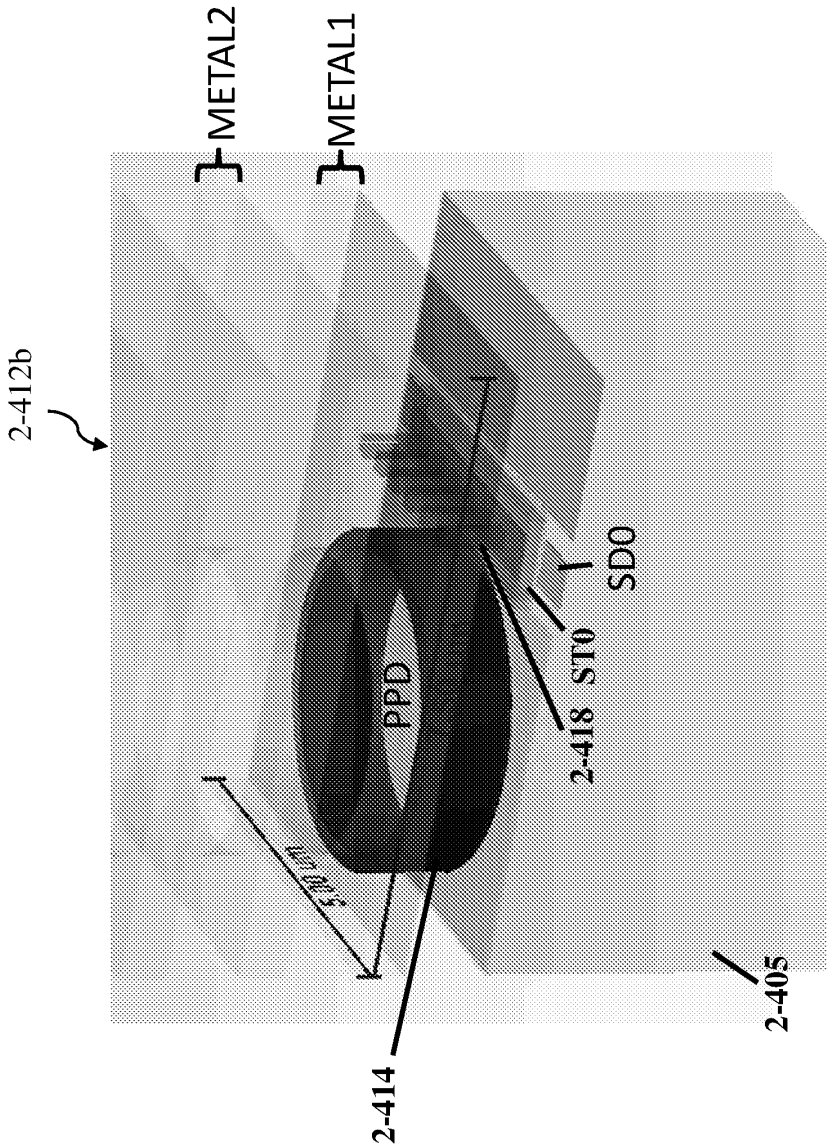

FIG. 2-4B

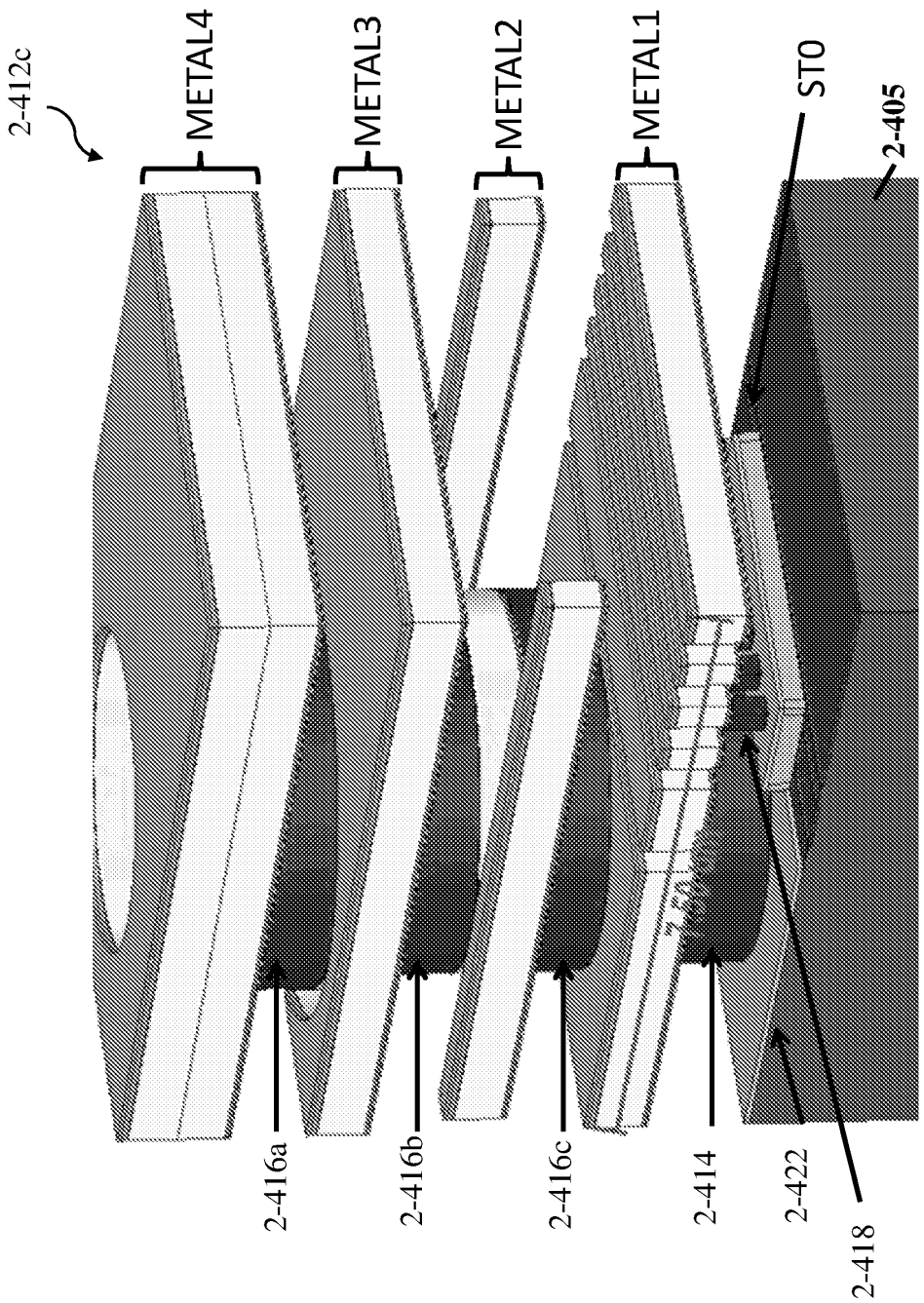
2-412c
METAL4
METAL3
METAL2
METAL1
ST0
2-405
2-416a
2-416b
2-416c
2-414
2-422
2-418

FIG. 2-4C

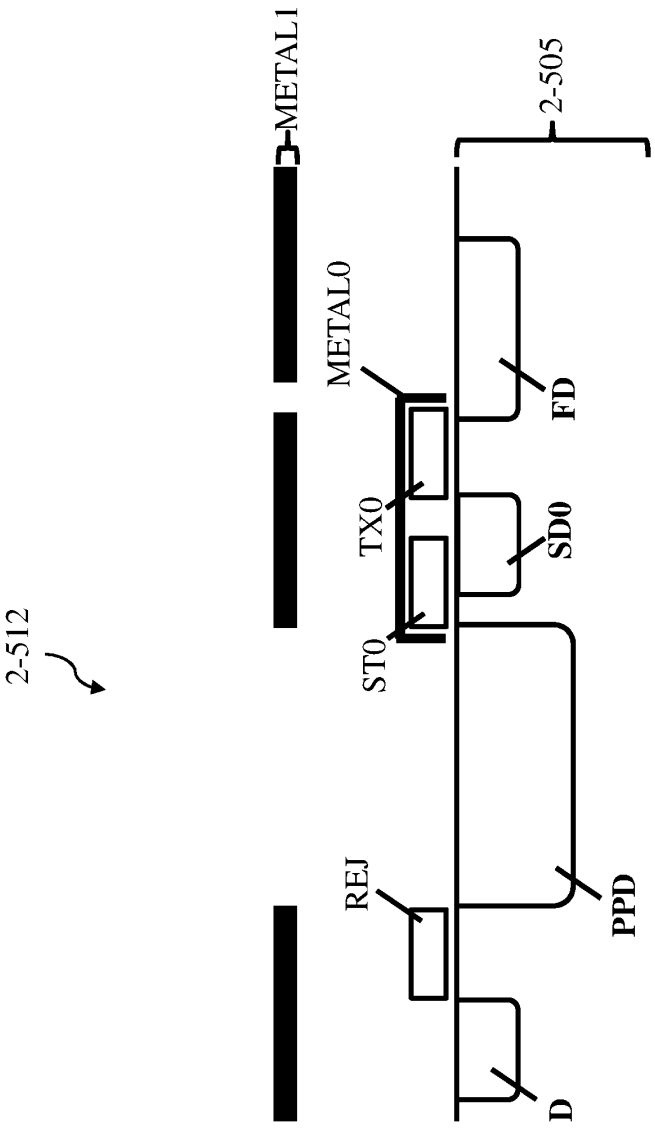

FIG. 2-5

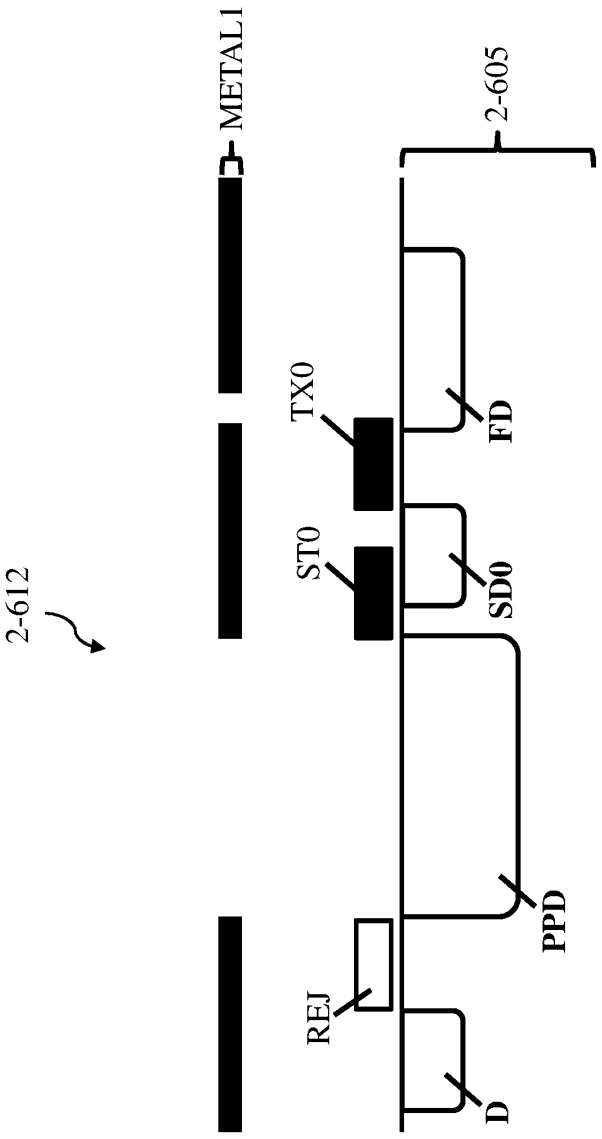

FIG. 2-6

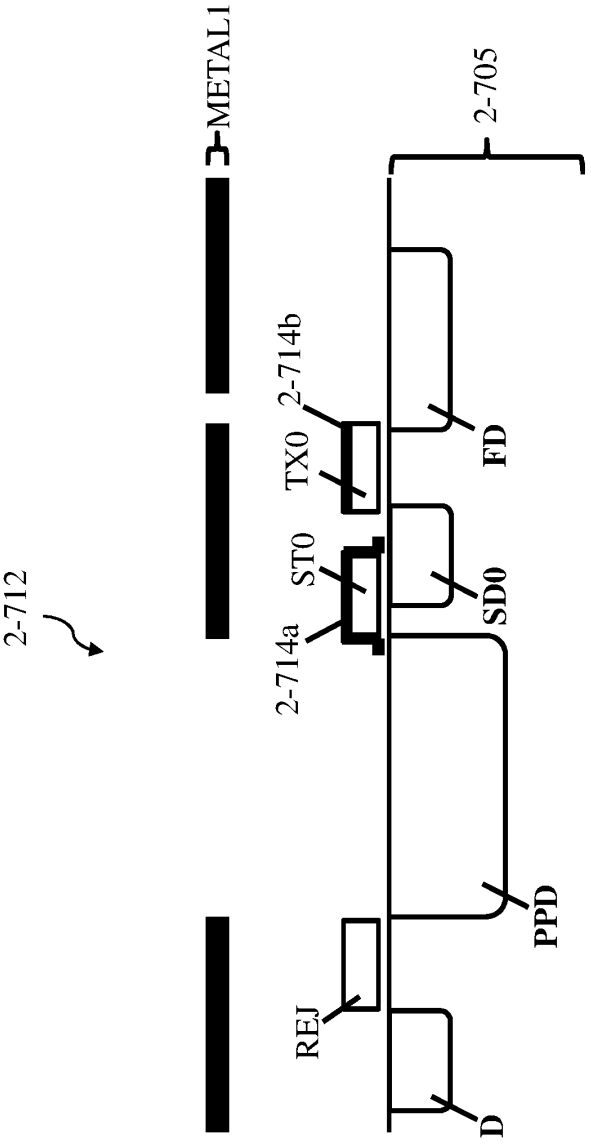

FIG. 2-7

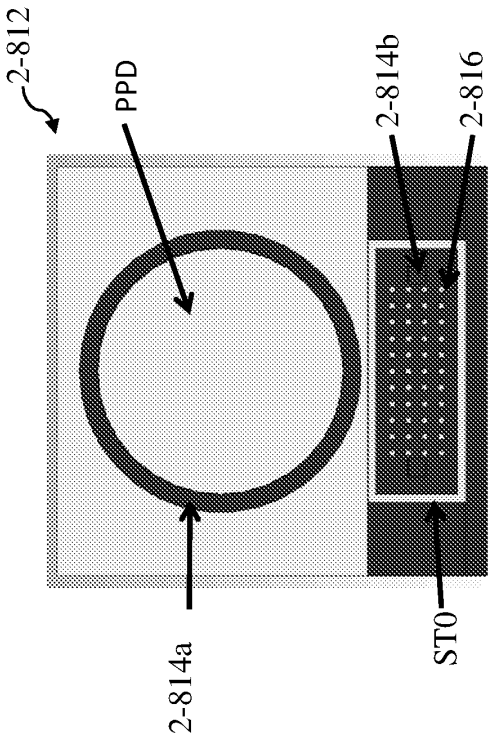

FIG. 2-8A

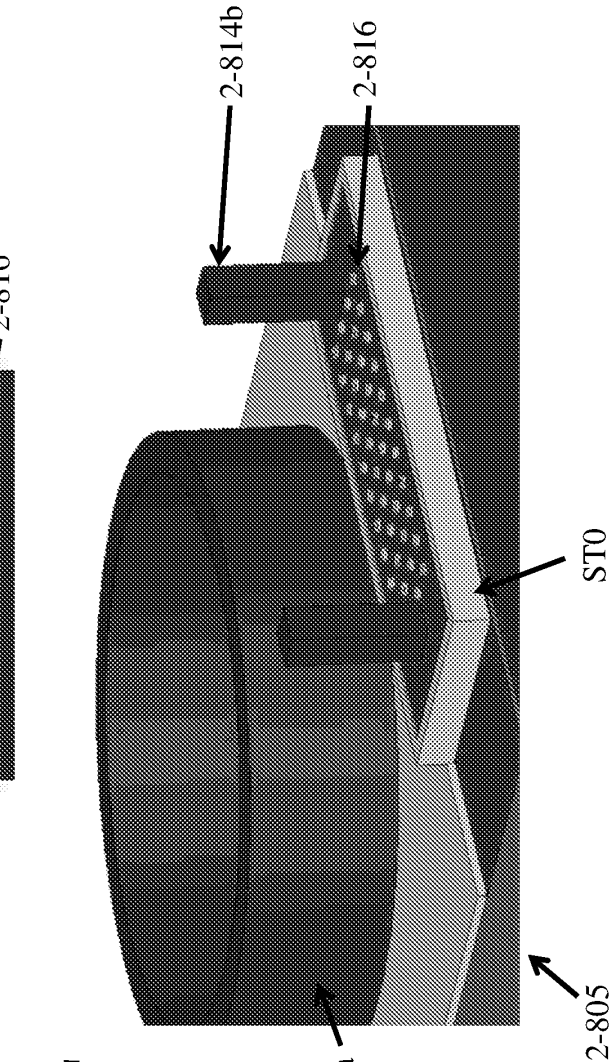

FIG. 2-8B

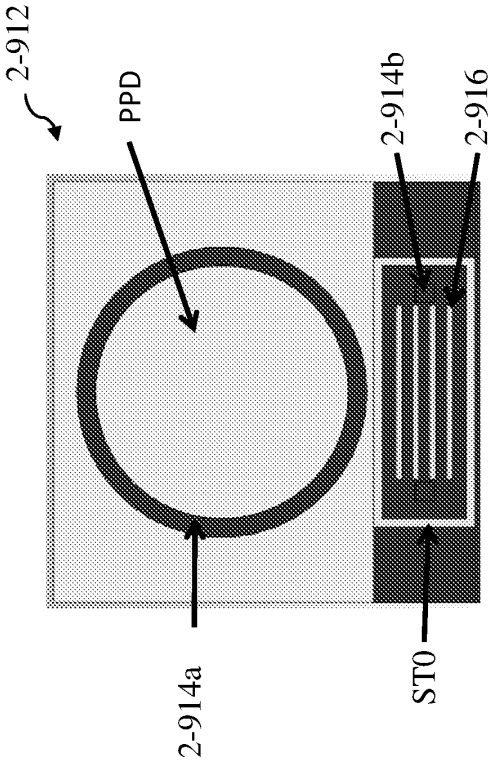

FIG. 2-9A

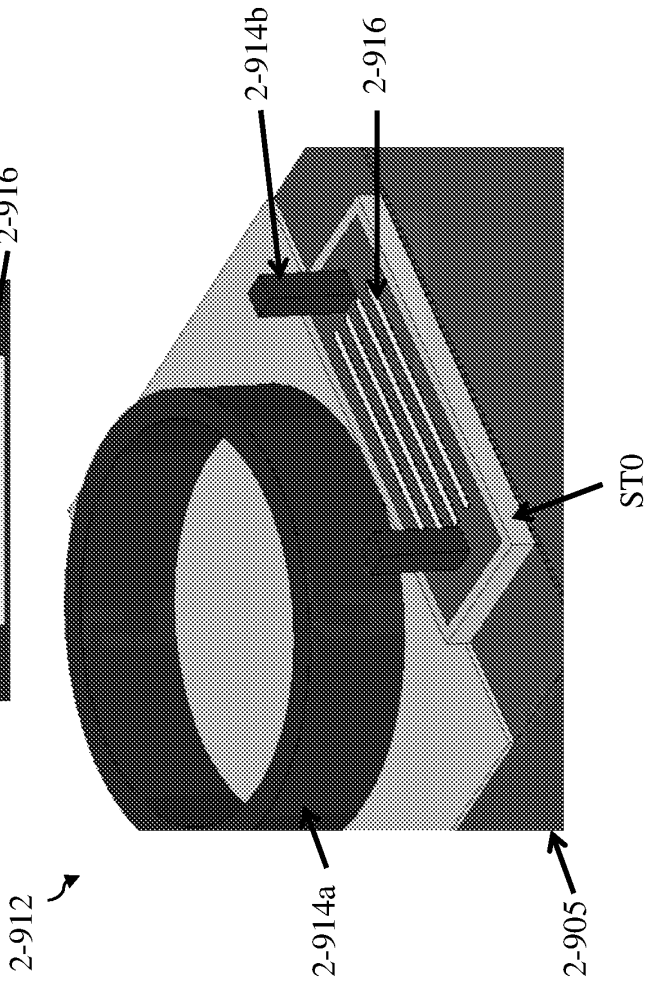

FIG. 2-9B

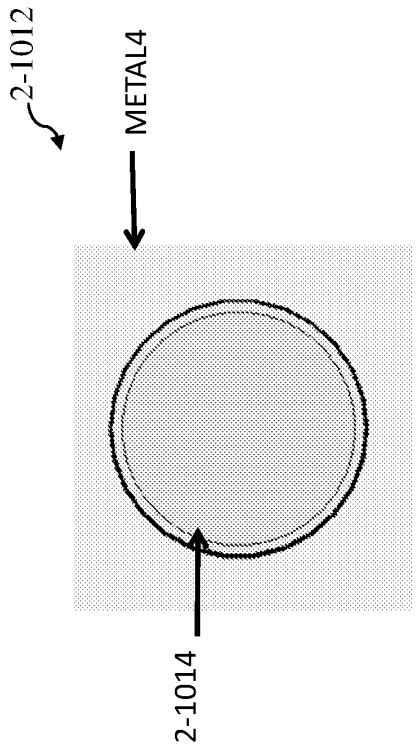

FIG. 2-10A

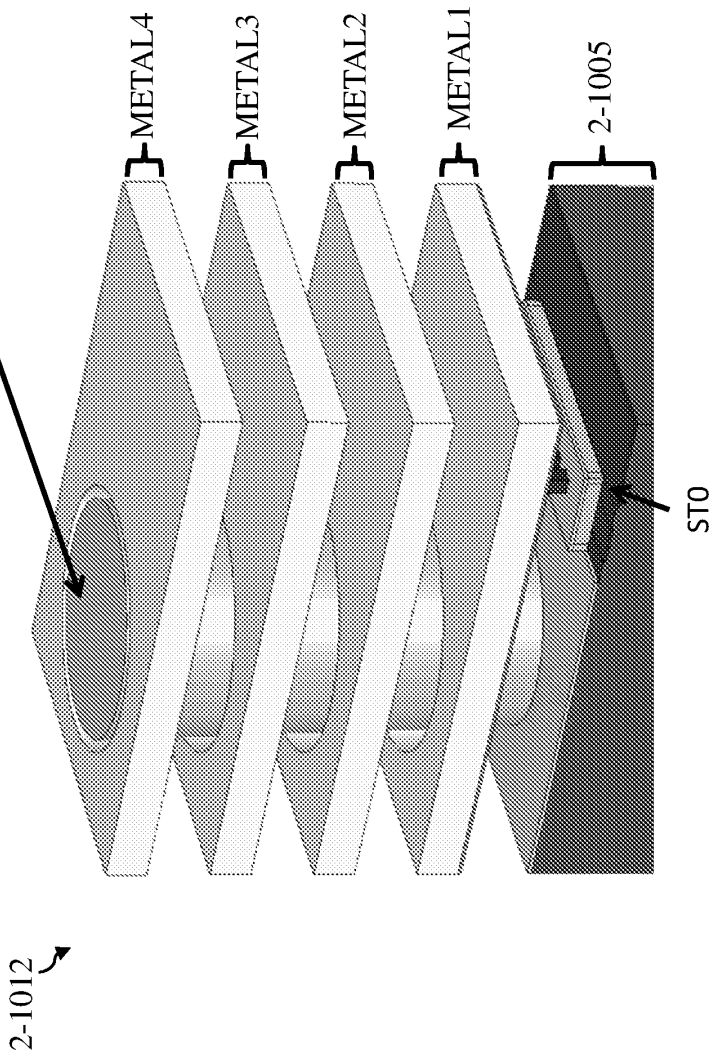

FIG. 2-10B

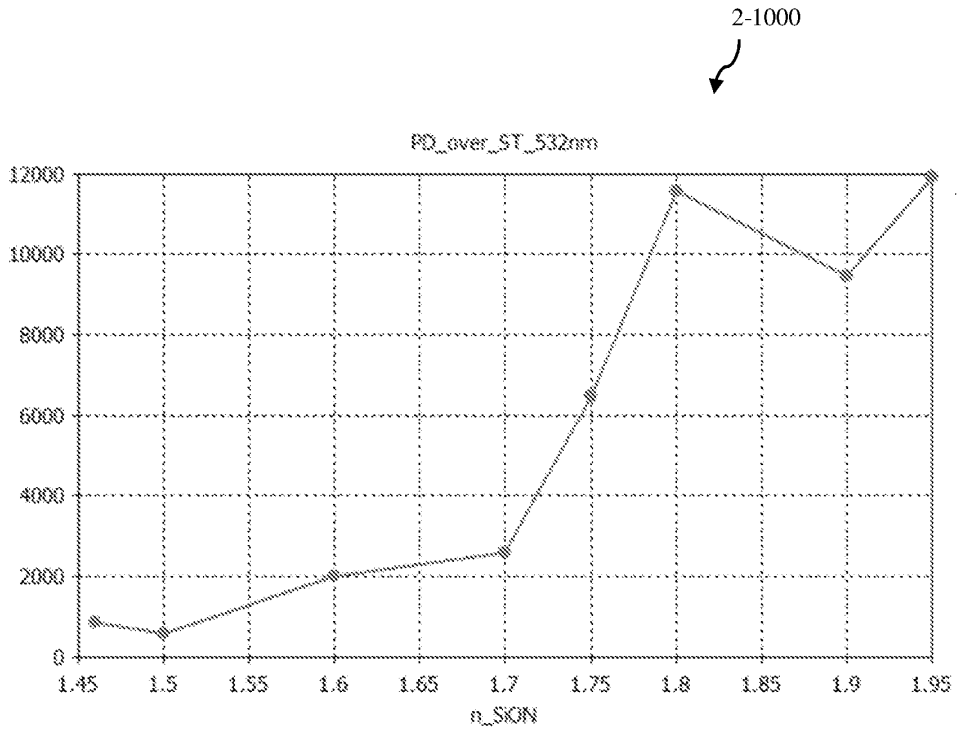
2-1000
PD_over_ST_532nm
12000
10000
8000
6000
4000
2000
0
1.45
1.5
1.55
1.6
1.65
1.7
1.75
1.8
1.85
1.9
1.95
n_SiON

FIG. 2-10C

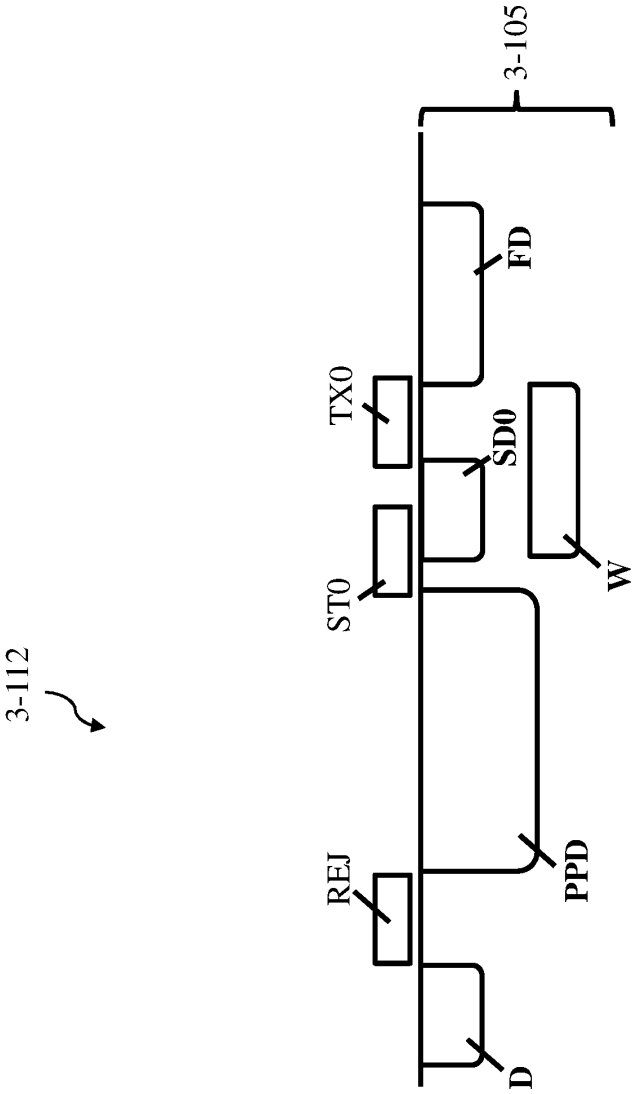

FIG. 3-1

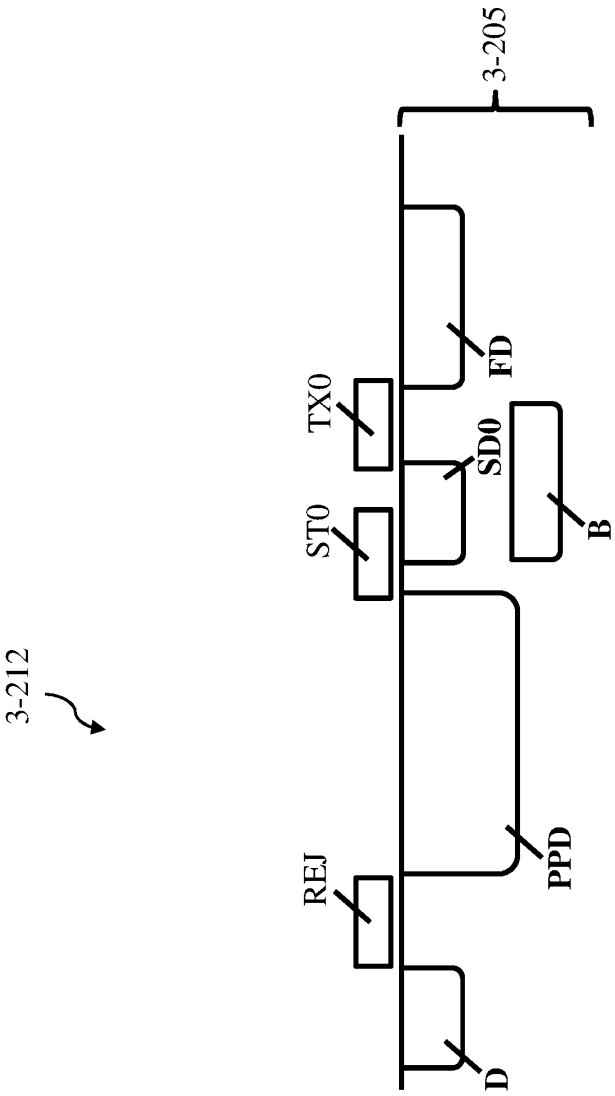

FIG. 3-2

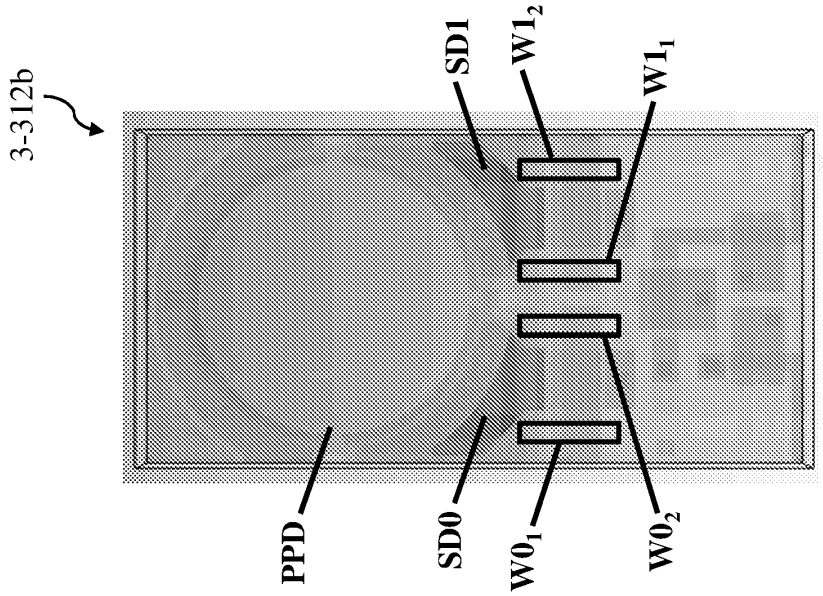

FIG. 3-3B

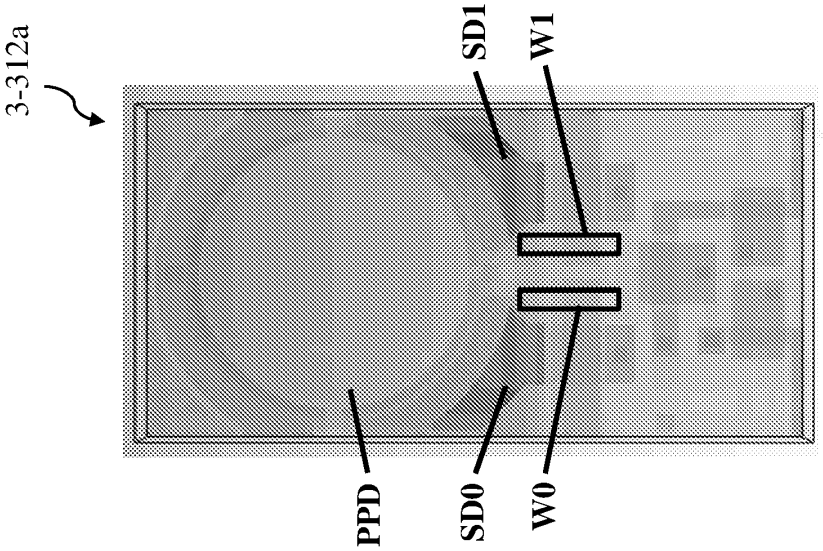

FIG. 3-3A

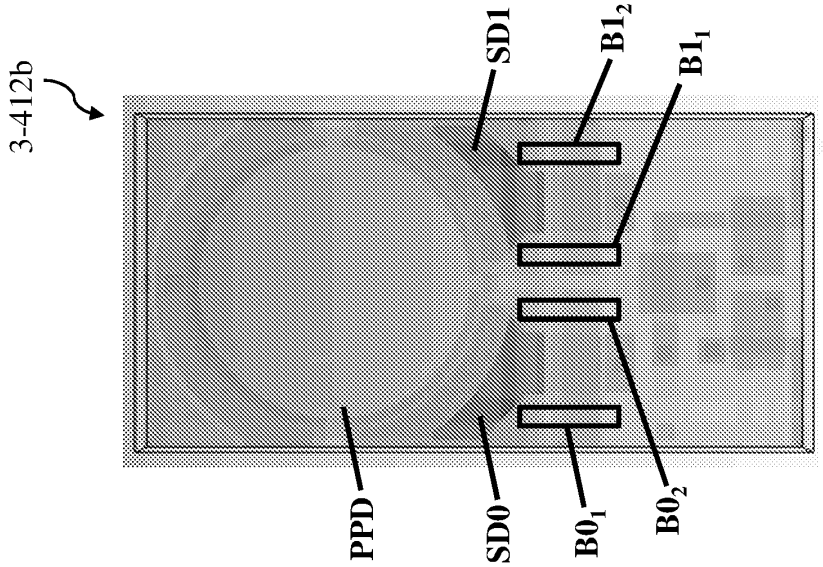

FIG. 3-4B

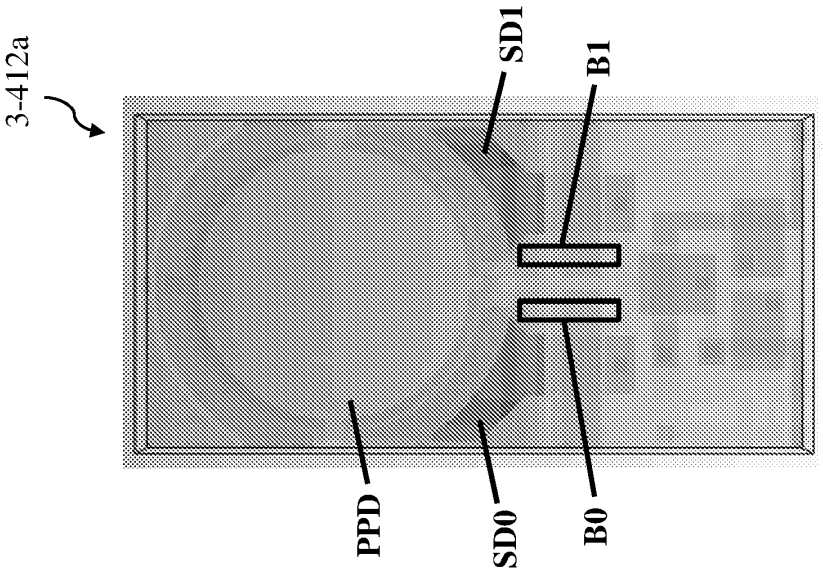

FIG. 3-4A

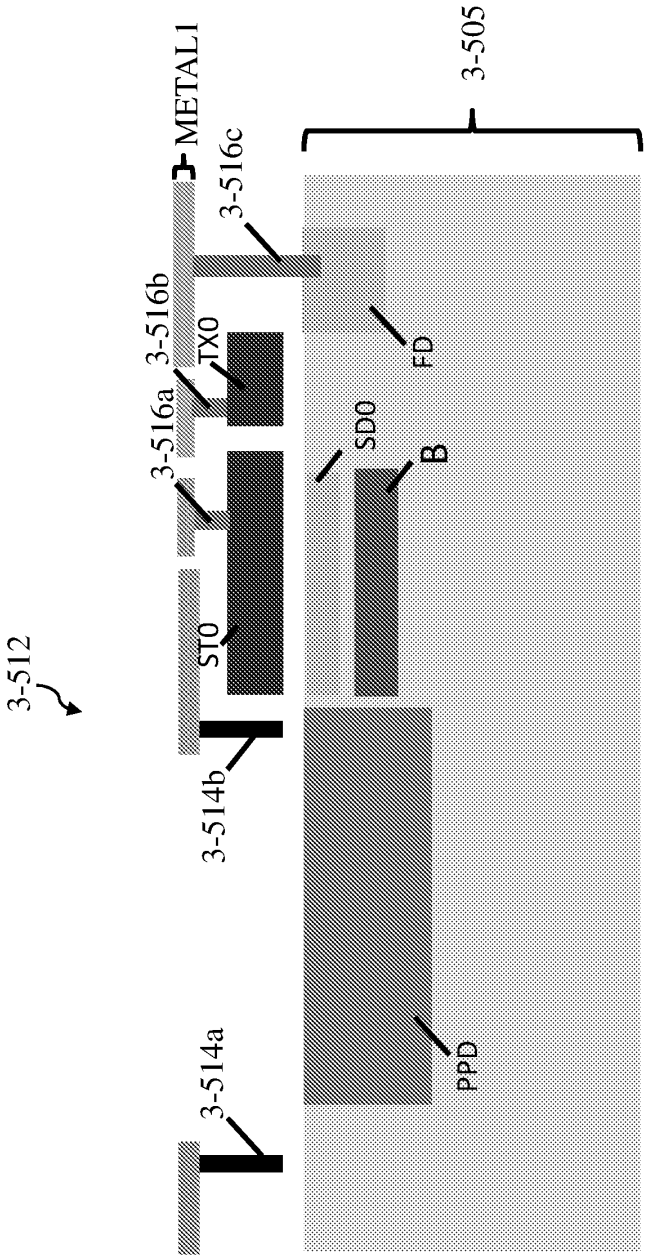
3-512
3-514a
3-514b
3-516a
3-516b
3-516c
METAL1
3-505
ST0
TX0
SD0
B
FD
PPD

FIG. 3-5

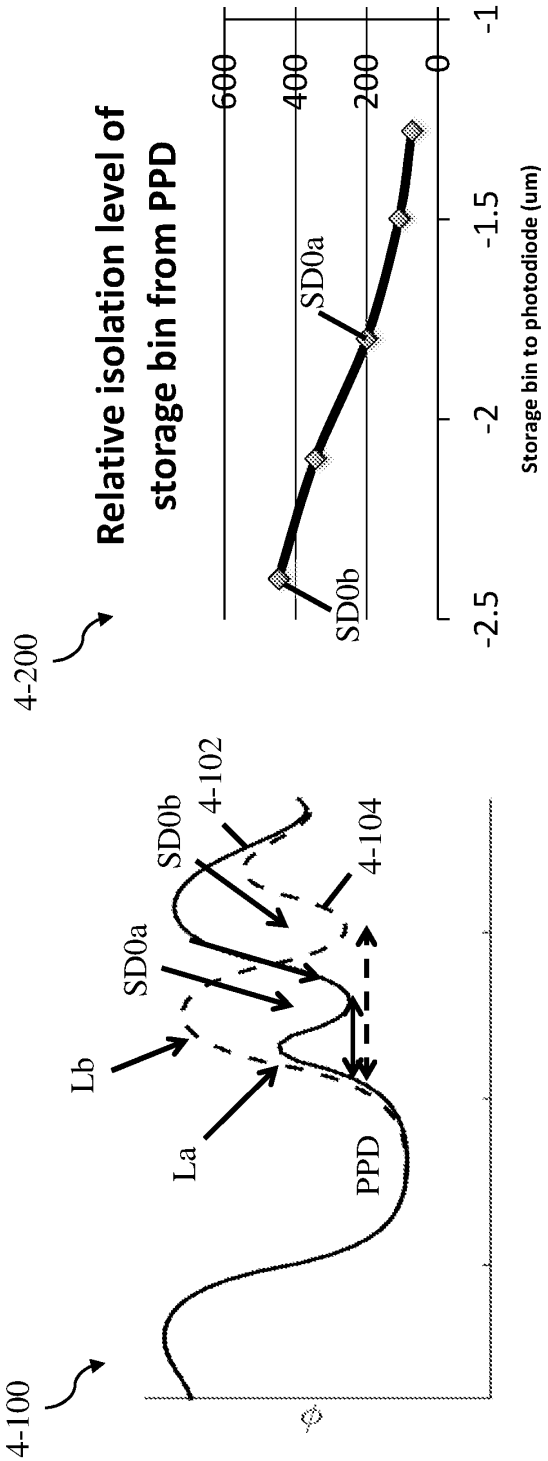
4-100
4-200
Lb
La
SD0a
SD0b
4-102
4-104
PPD
Relative isolation level of storage bin from PPD
600
400
200
0
-1
-1.5
-2
-2.5
SD0a
SD0b
Storage bin to photodiode (um)

FIG. 4-1

FIG. 4-2

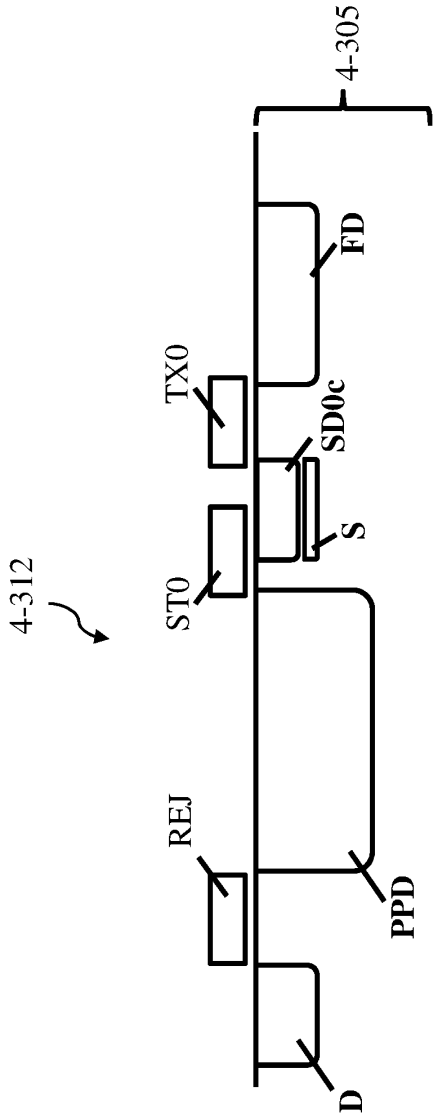
4-312
4-305
TX0
FD
SD0c
S
ST0
REJ
PPD
D

FIG. 4-3

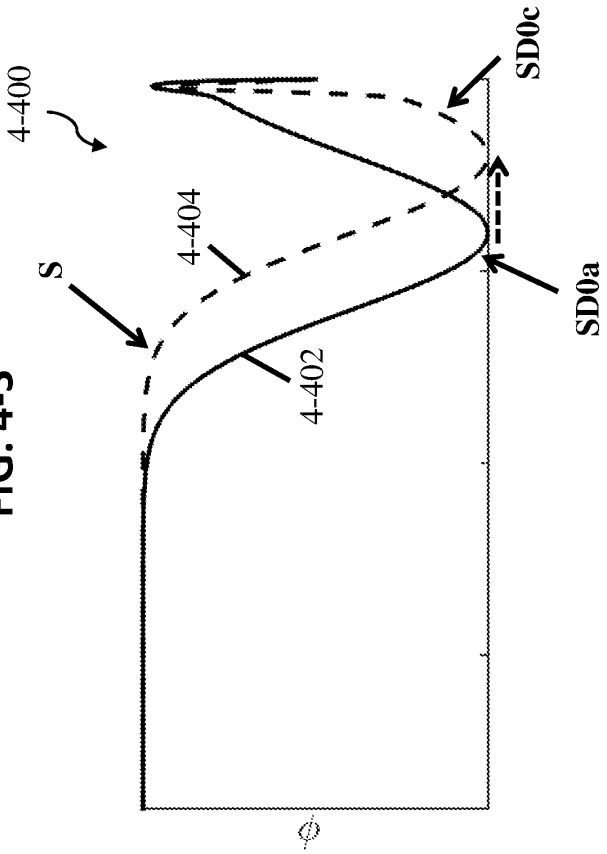
4-400
SD0c
4-404
S
SD0a
4-402
ϕ

FIG. 4-4

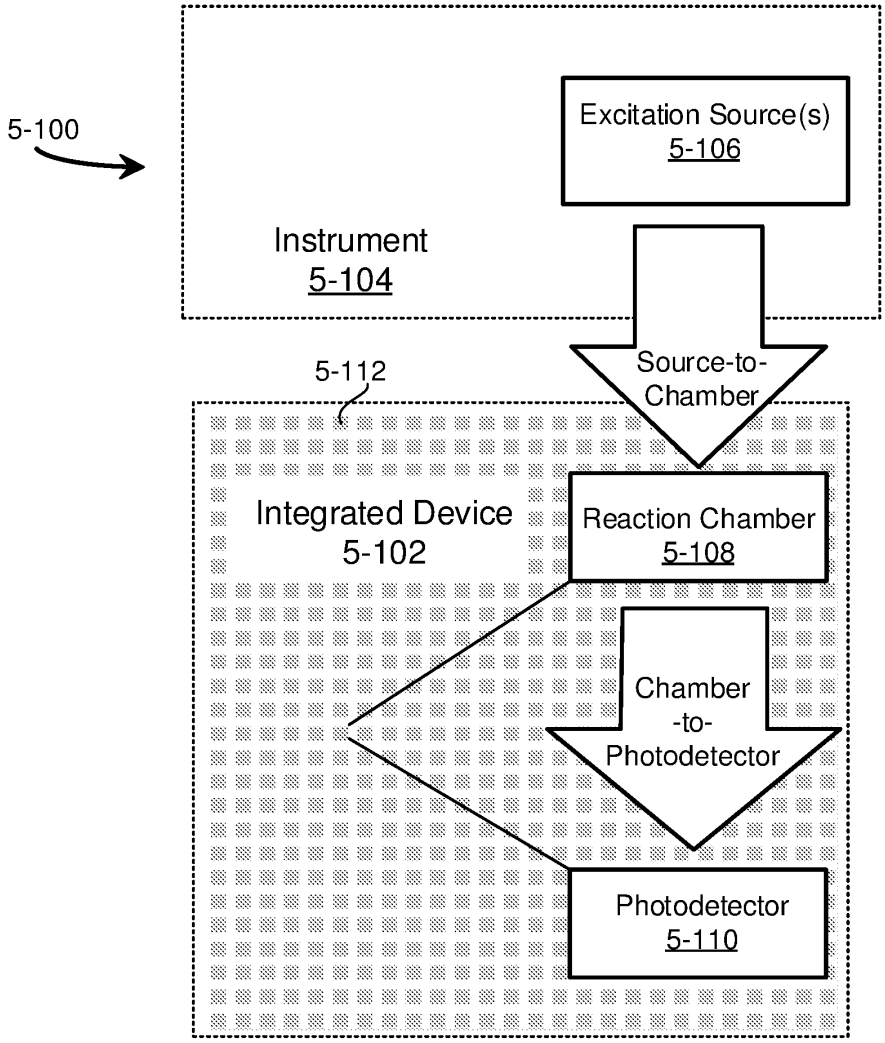
5-100
Excitation Source(s)
5-106
Instrument
5-104
Source-to-
Chamber
5-112
Integrated Device
5-102
Reaction Chamber
5-108
Chamber
-to-
Photodetector
Photodetector
5-110

FIG. 5-1A

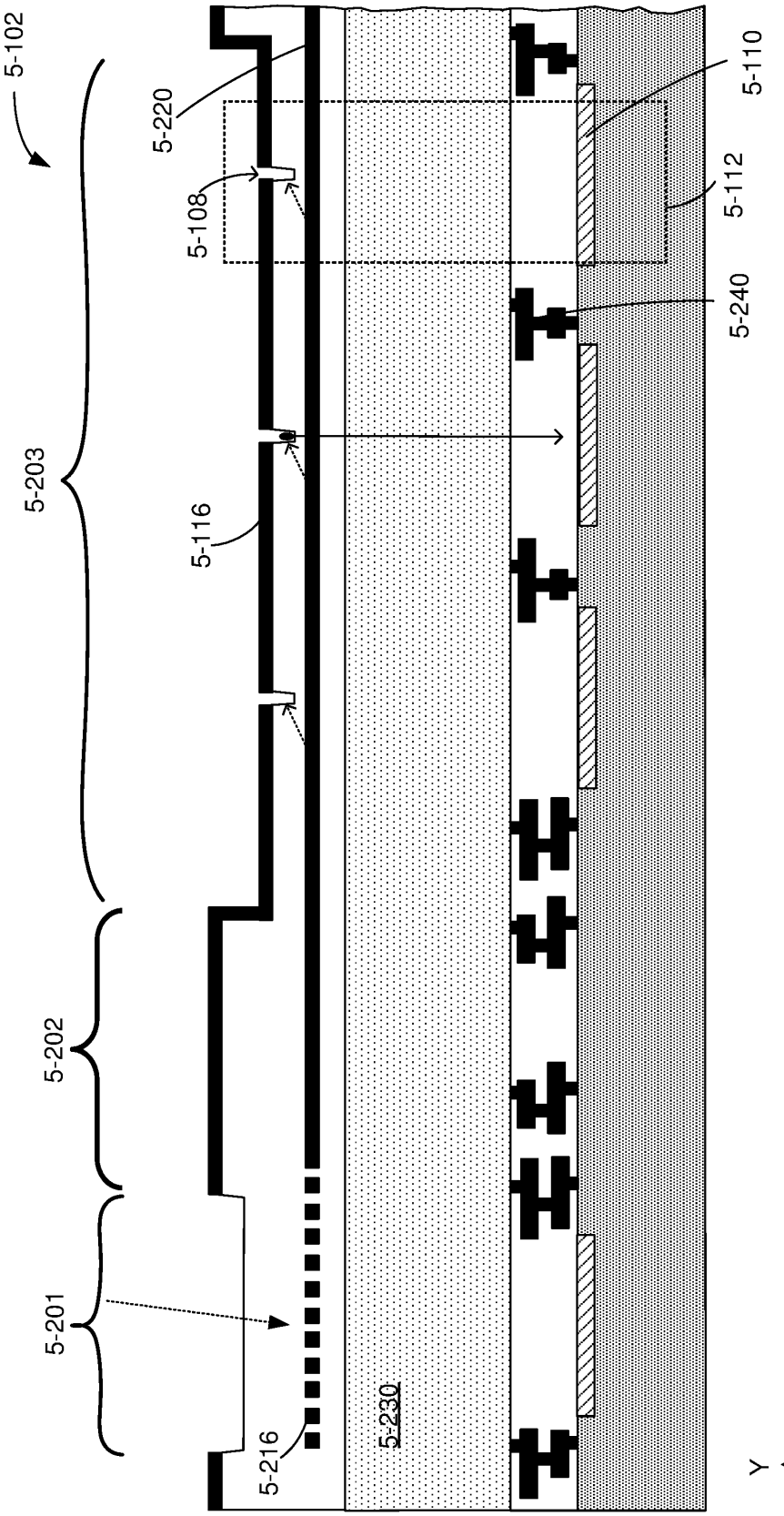
5-102
5-220
5-110
5-108
5-112
5-240
5-203
5-116
5-202
5-201
5-216
5-230
Y
Z

FIG. 5-1B

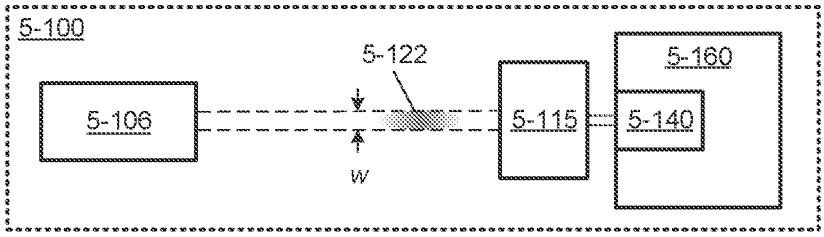

FIG. 5-1C

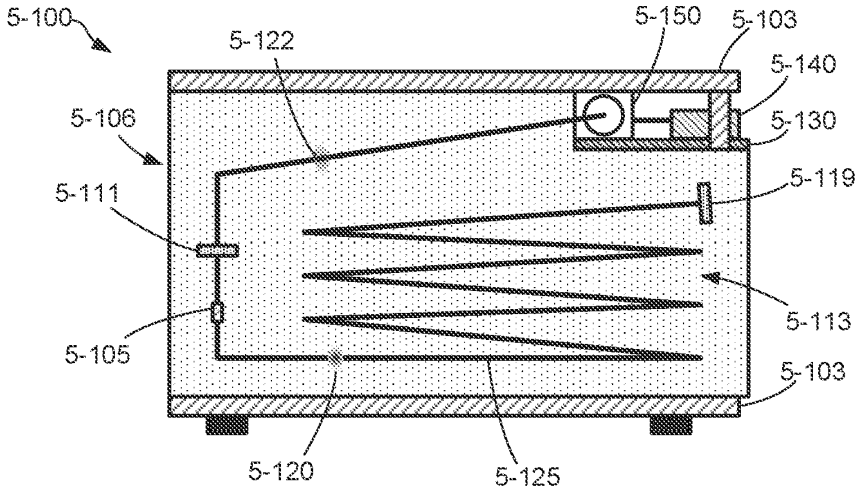

FIG. 5-1D

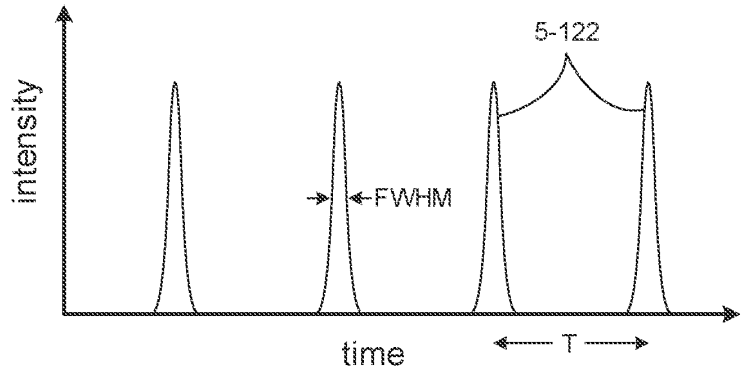

FIG. 5-2

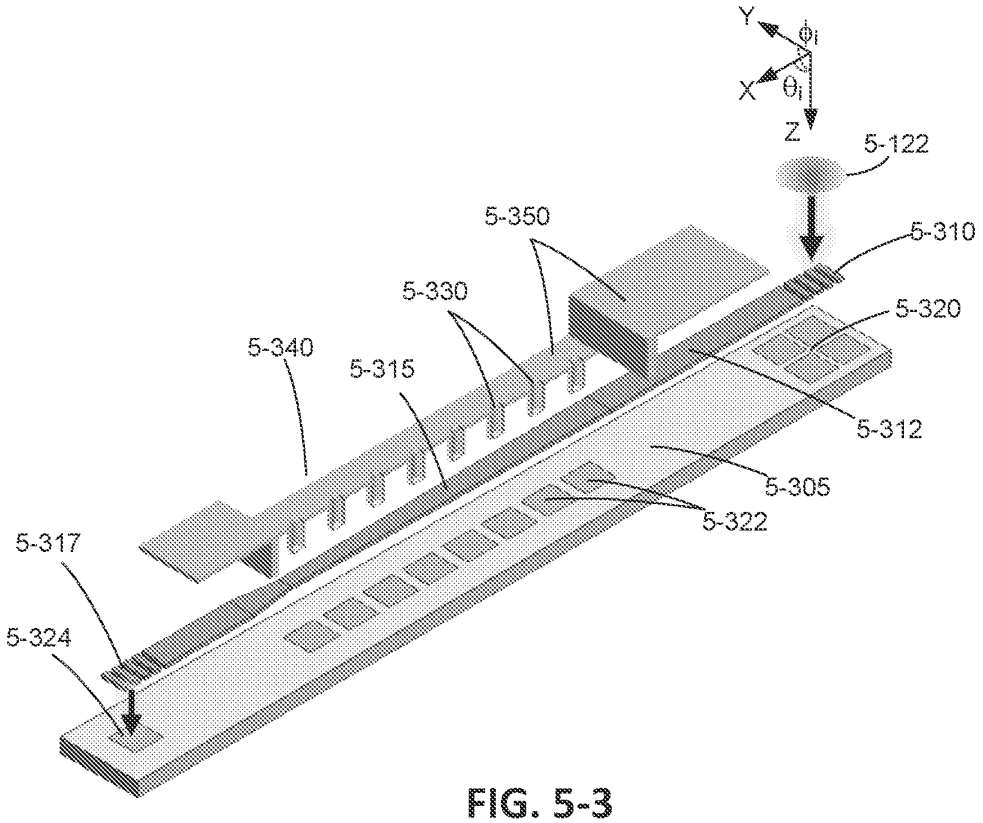
Y
ϕ_i
X
θ_i
Z
5-122
5-350
5-310
5-330
5-320
5-340
5-315
5-312
5-305
5-322
5-317
5-324

FIG. 5-3

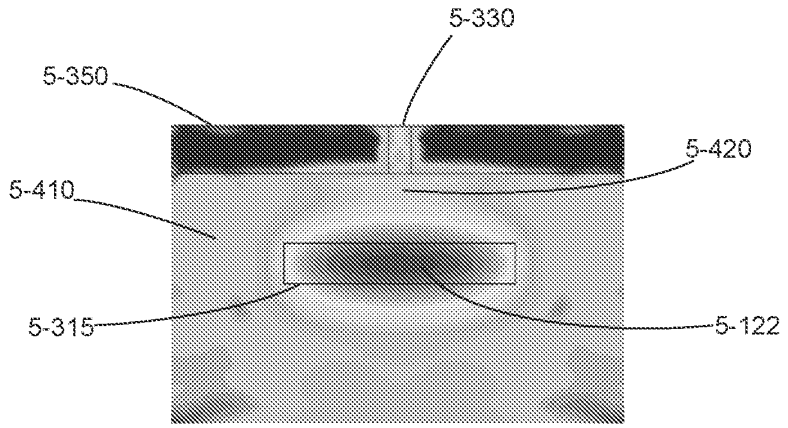
5-330
5-350
5-420
5-410
5-315
5-122

FIG. 5-4

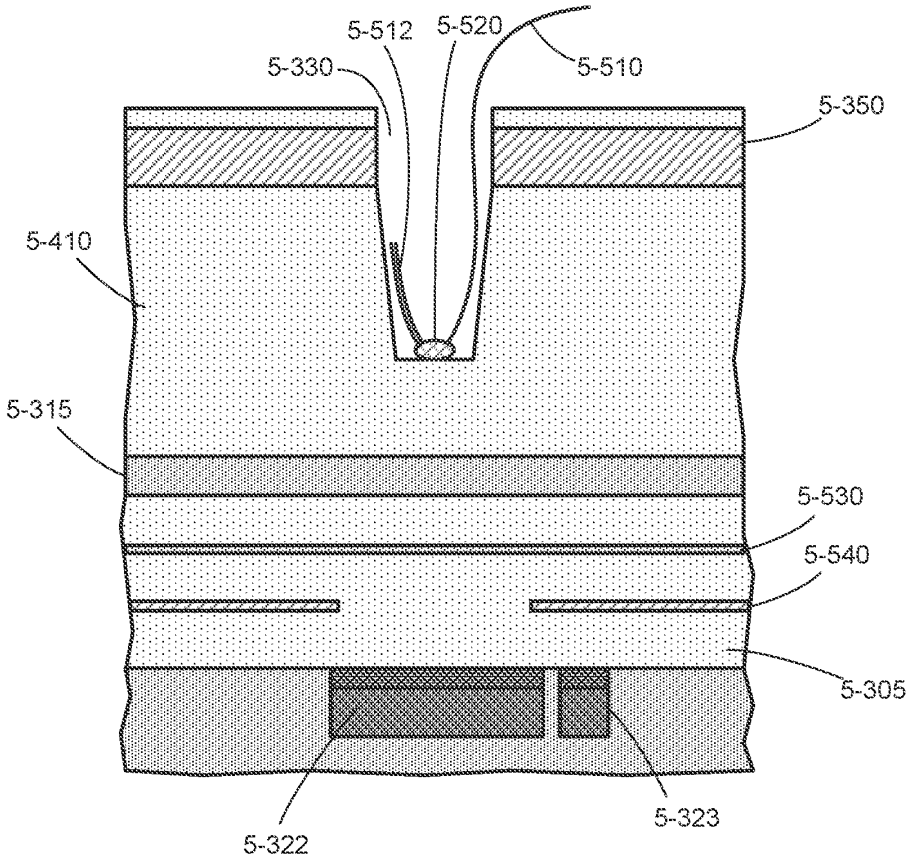
5-512
5-520
5-330
5-510
5-350
5-410
5-315
5-530
5-540
5-305
5-322
5-323

FIG. 5-5

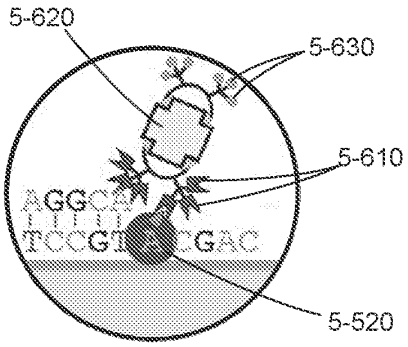
5-620
5-630
5-610
5-520

FIG. 5-6

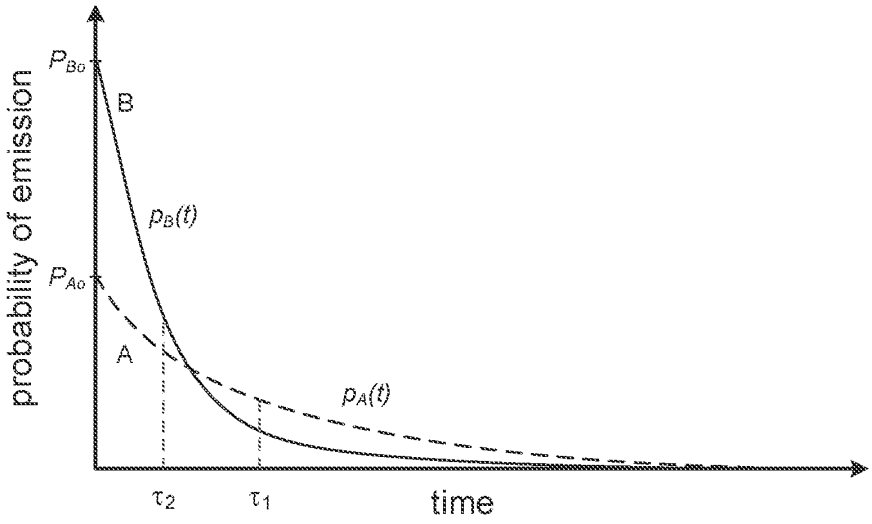
probability of emission
P_{Bo}
B
$p_B(t)$
P_{Ao}
A
$p_A(t)$
τ_2
τ_1
time

FIG. 5-7

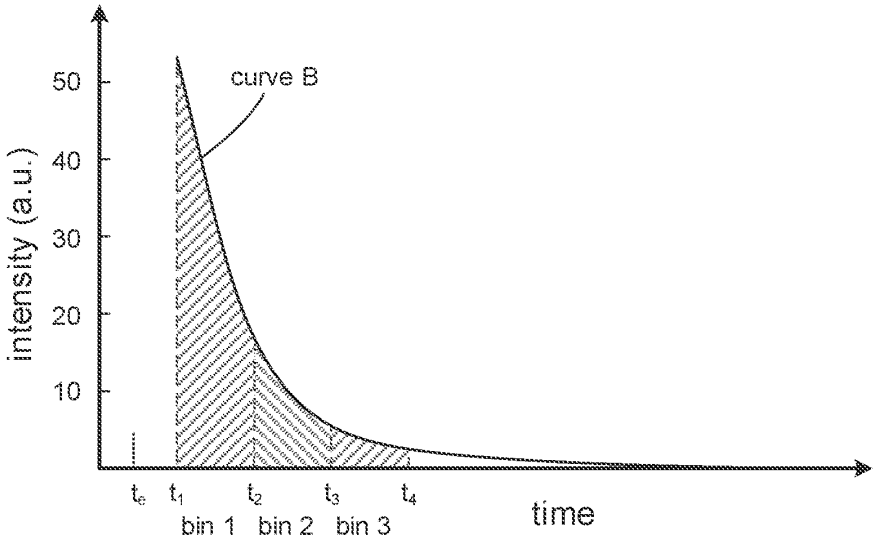
intensity (a.u.)
50
40
30
20
10
curve B
t_e
t_1
t_2
t_3
t_4
bin 1
bin 2
bin 3
time

FIG. 5-8

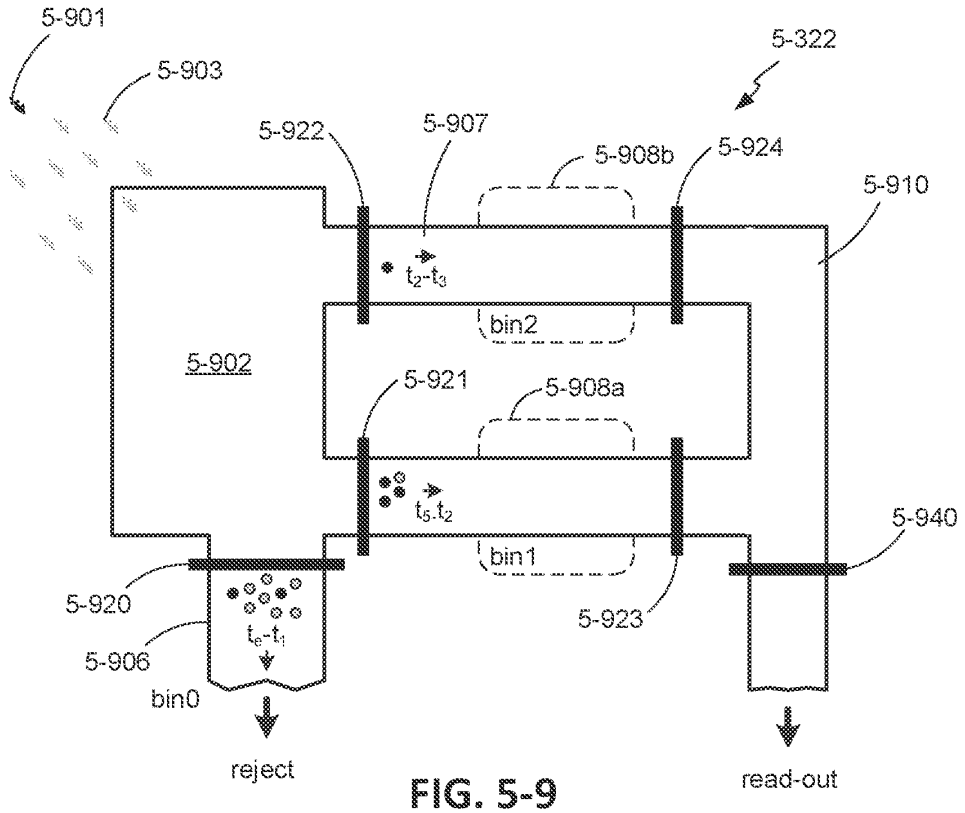

FIG. 5-9

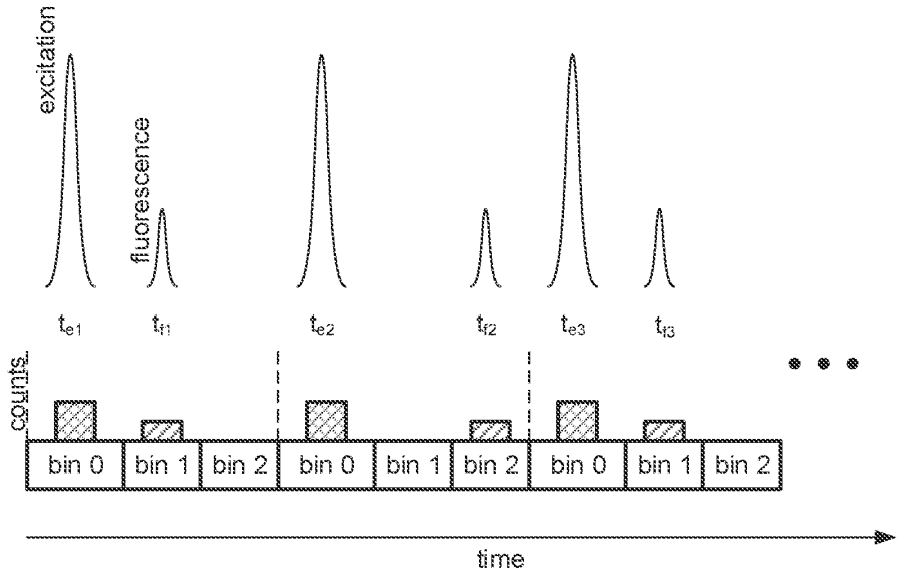

FIG. 5-10A

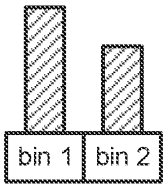

FIG. 5-10B

T

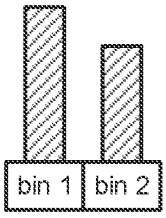

FIG. 5-11A

A

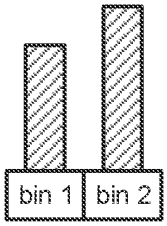

FIG. 5-11B

C

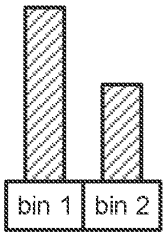

FIG. 5-11C

G

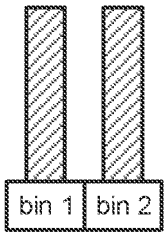

FIG. 5-11D

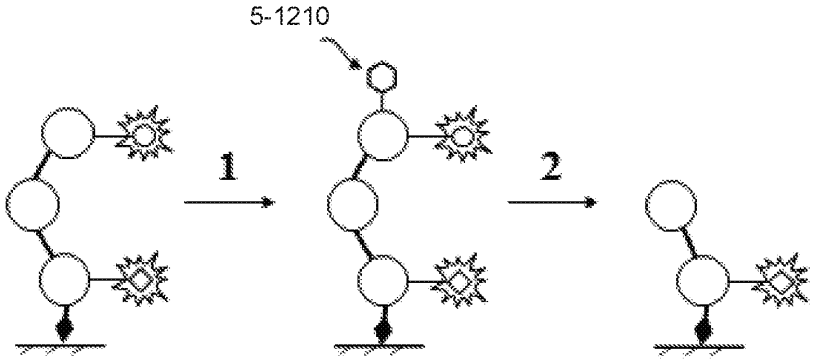

FIG. 5-12

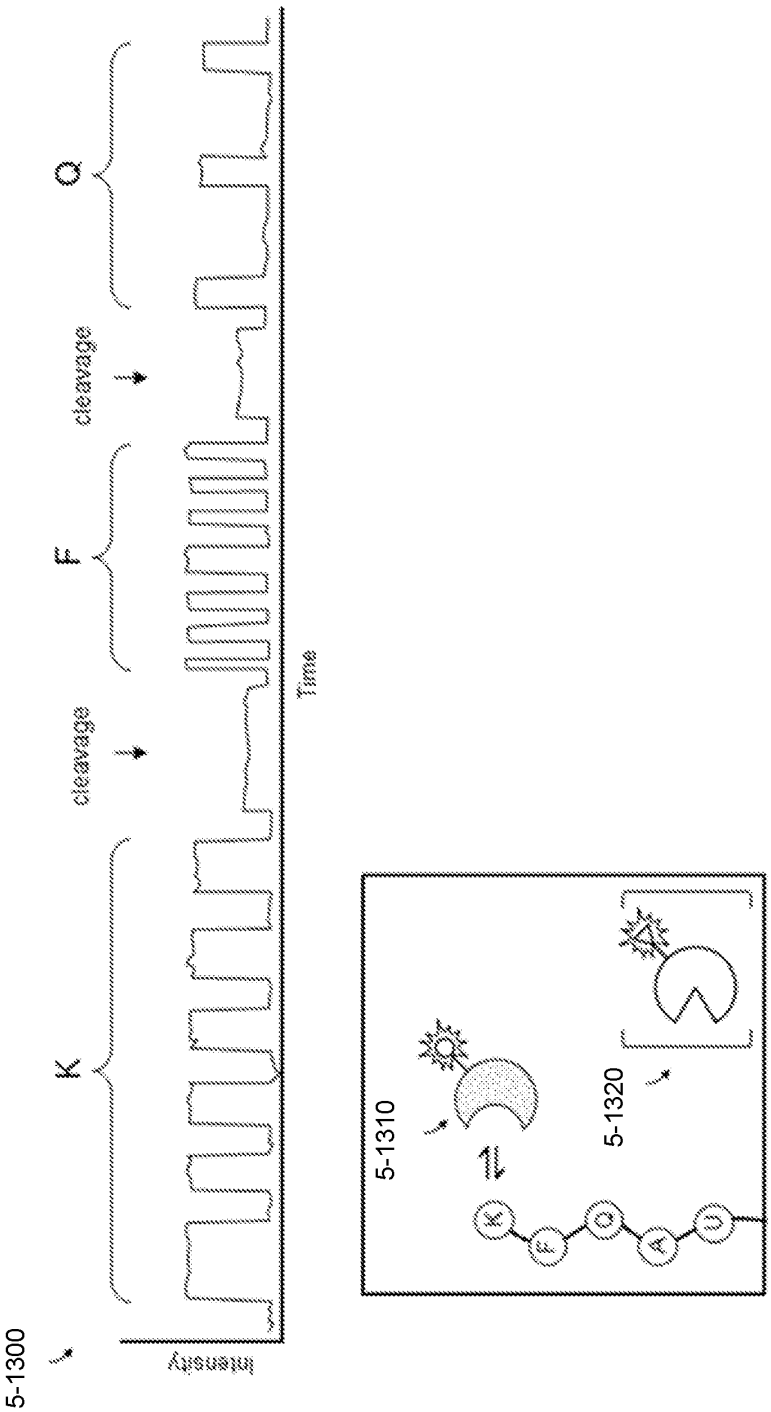

FIG. 5-13

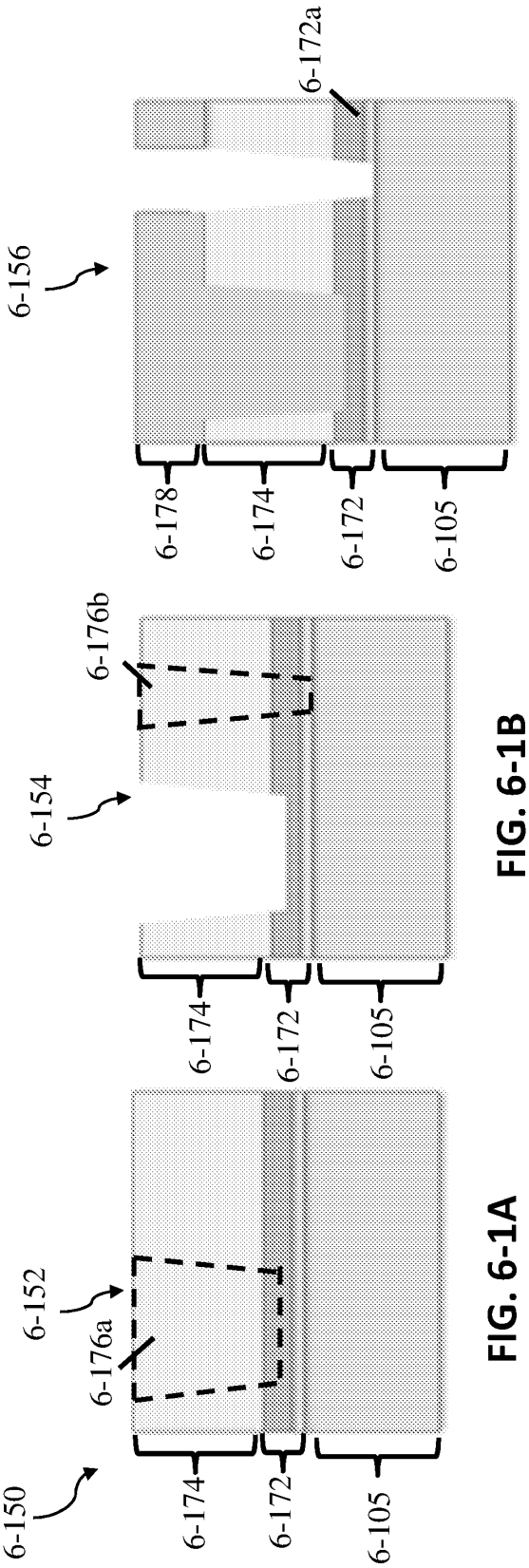

FIG. 6-1A

FIG. 6-1B

FIG. 6-1C

FIG. 6-1D

FIG. 6-1E

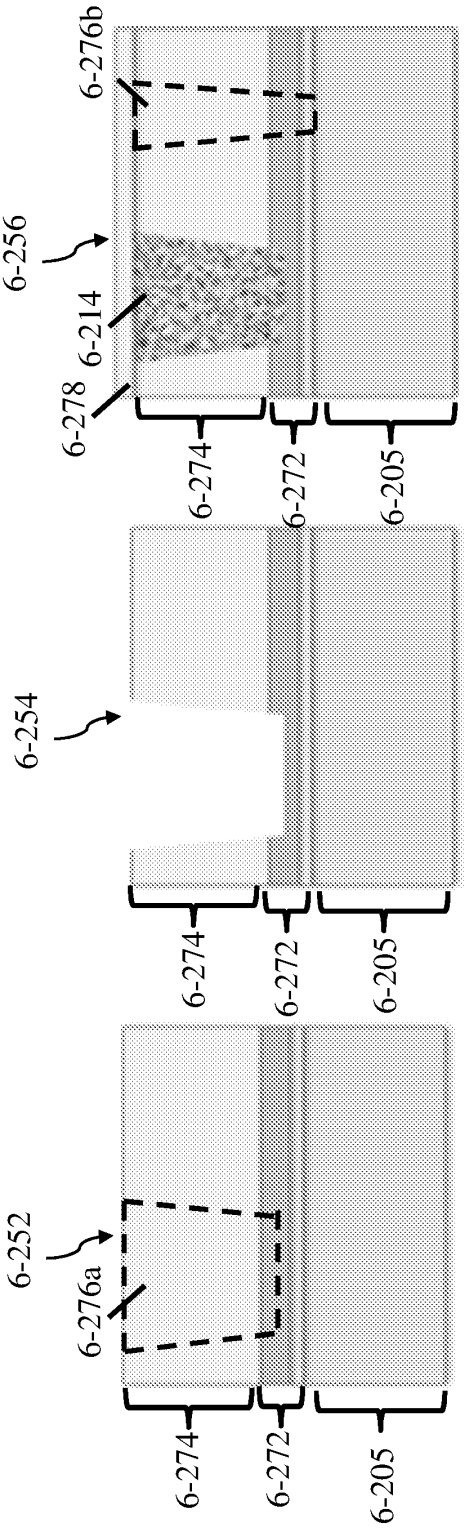

FIG. 6-2A

FIG. 6-2B

FIG. 6-2C

FIG. 6-2D

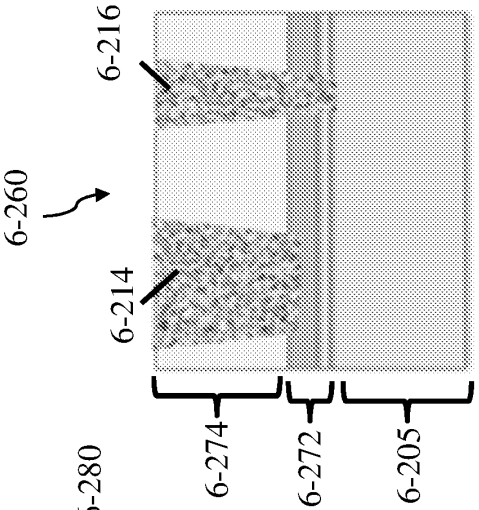

FIG. 6-2E

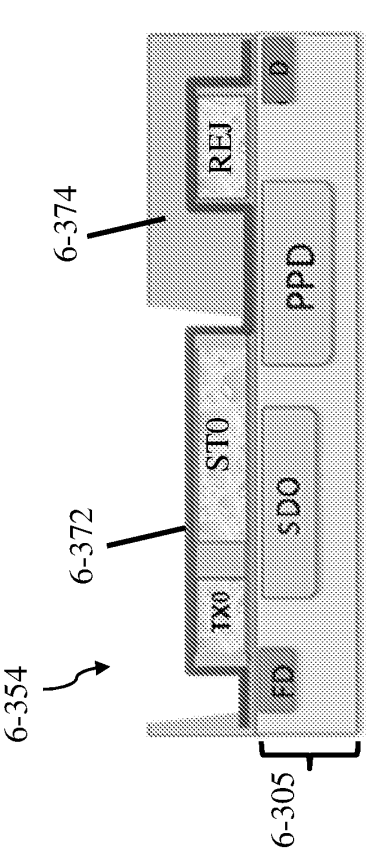

FIG. 6-3B

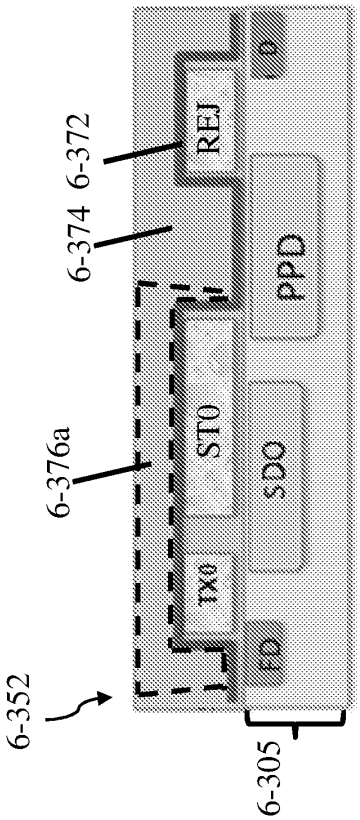

FIG. 6-3A

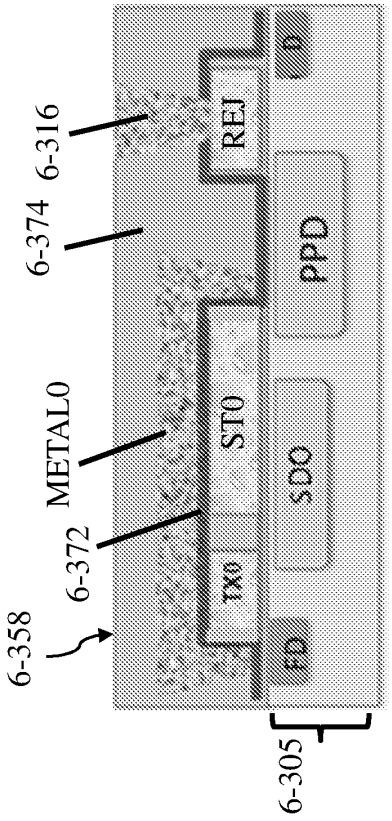

FIG. 6-3D

FIG. 6-3C

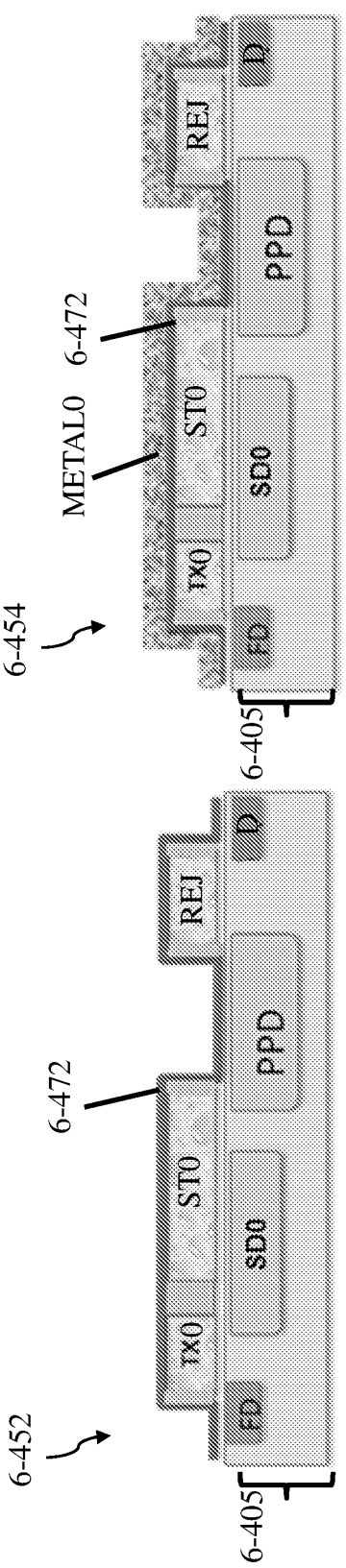

FIG. 6-4A

FIG. 6-4B

FIG. 6-4C

FIG. 6-4D