(12) INTERNATIONAL APPLICATION PUBLISHED UNDER THE PATENT COOPERATION TREATY (PCT)

(19) World Intellectual Property Organization
International Bureau

(43) International Publication Date
12 January 2012 (12.01.2012)

PCT

(10) International Publication Number
WO 2012/004767 A1

(51) International Patent Classification:
B09B 3/00 (2006.01)

(21) International Application Number:
PCT/IB2011/053038

(22) International Filing Date:
8 July 2011 (08.07.2011)

(25) Filing Language: English

(26) Publication Language: English

(30) Priority Data:
586690 8 July 2010 (08.07.2010) NZ

(71) Applicant *(for all designated States except US)*: **BIO-COSMO TECHNOLOGIES LIMITED** [NZ/NZ]; C/o Campbell Tyson Cooper Limited, 17 Hall Street, Pukekohe (NZ).

(72) Inventor; and

(75) Inventor/Applicant *(for US only)*: **ATKINSON, Terrence** [NZ/NZ]; C/o Bio-Cosmo Technologies Limited, C/o Campbell Tyson Cooper Limited, 17 Hall Street, Pukekohe (NZ).

(74) Agent: **BUCHANAN, Elspeth Victoria**; 15B Byron Street, (P.O. Box 1250, Christchurch 8140), Christchurch, 8023 (NZ).

(81) Designated States *(unless otherwise indicated, for every kind of national protection available)*: AE, AG, AL, AM, AO, AT, AU, AZ, BA, BB, BG, BH, BR, BW, BY, BZ, CA, CH, CL, CN, CO, CR, CU, CZ, DE, DK, DM, DO, DZ, EC, EE, EG, ES, FI, GB, GD, GE, GH, GM, GT, HN, HR, HU, ID, IL, IN, IS, JP, KE, KG, KM, KN, KP, KR, KZ, LA, LC, LK, LR, LS, LT, LU, LY, MA, MD, ME, MG, MK, MN, MW, MX, MY, MZ, NA, NG, NI, NO, NZ, OM, PE, PG, PH, PL, PT, RO, RS, RU, SC, SD, SE, SG, SK, SL, SM, ST, SV, SY, TH, TJ, TM, TN, TR, TT, TZ, UA, UG, US, UZ, VC, VN, ZA, ZM, ZW.

(84) Designated States *(unless otherwise indicated, for every kind of regional protection available)*: ARIPO (BW, GH, GM, KE, LR, LS, MW, MZ, NA, SD, SL, SZ, TZ, UG, ZM, ZW), Eurasian (AM, AZ, BY, KG, KZ, MD, RU, TJ, TM), European (AL, AT, BE, BG, CH, CY, CZ, DE, DK, EE, ES, FI, FR, GB, GR, HR, HU, IE, IS, IT, LT, LU, LV, MC, MK, MT, NL, NO, PL, PT, RO, RS, SE, SI, SK, SM, TR), OAPI (BF, BJ, CF, CG, CI, CM, GA, GN, GQ, GW, ML, MR, NE, SN, TD, TG).

Published:

— *with international search report (Art. 21(3))*

(54) **Title**: FOOD WASTE DIGESTION SYSTEM

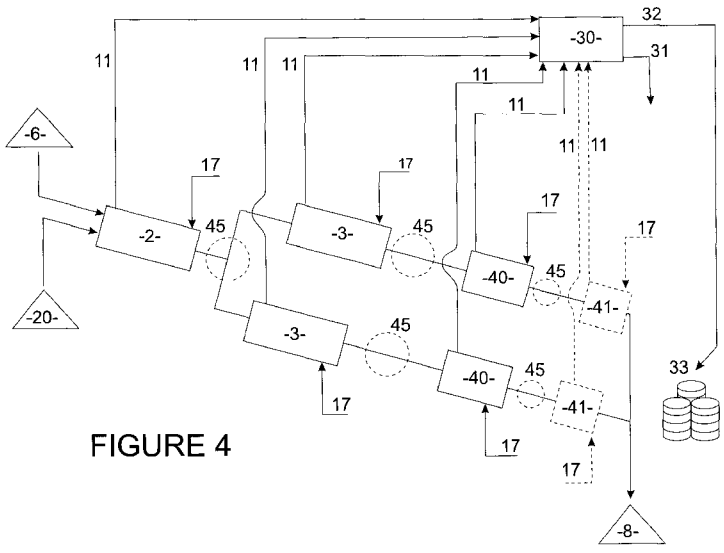

FIGURE 4

(57) **Abstract**: A waste digestion system including a primary digester and one or more first subsequent digesters for processing non-liquid organic waste material without the addition of external heat using thermophilic aerobic bacteria to produce a stable product, said digesters being configured to contain contents including the waste material, each of said digesters further including mixing means configured to mix the contents of that digester with feed air drawn through the contents during processing in such a way as to maintain essentially aerobic conditions within the digester; such that the waste material is first processed in the primary digester before a proportion of the contents of the primary digester are transferred to at least one first subsequent digester where further processing occurs; if the first subsequent digester completes the processing then it is a final subsequent digester.

WO 2012/004767 A1