WO 2025/205426 PCT/JP2025/011022

[図1]

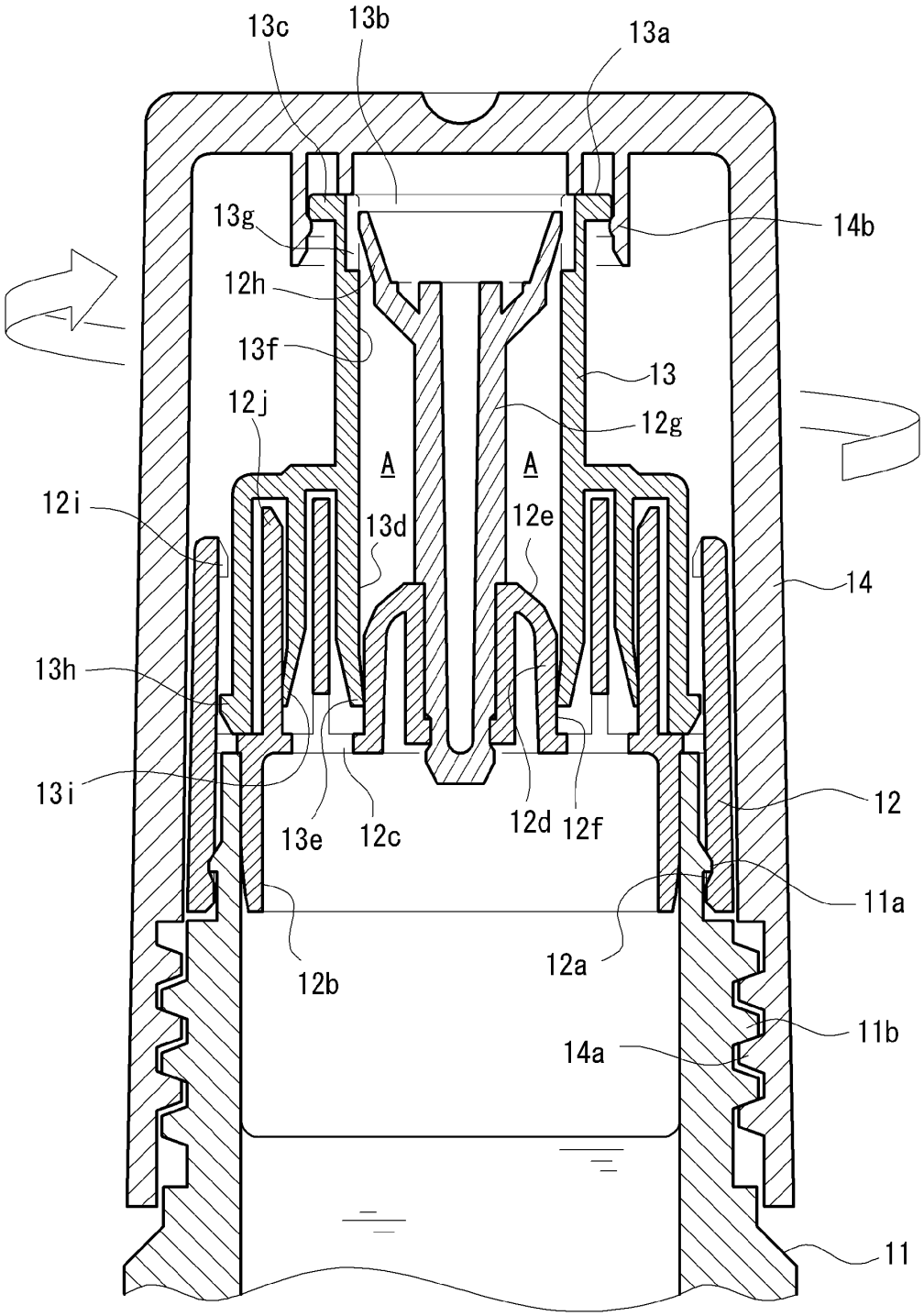

[図2]

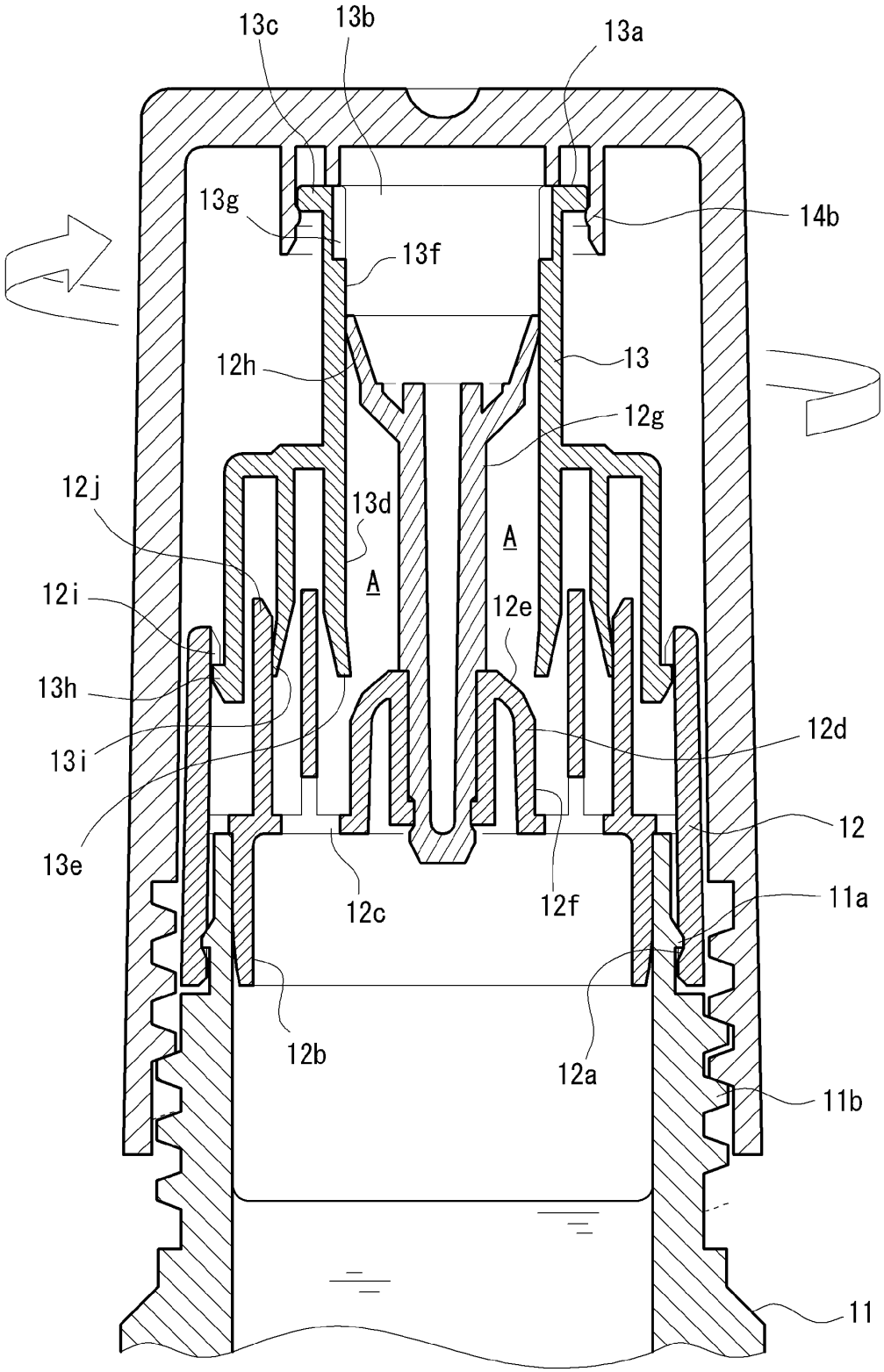
13c
13b
13a
13g
14b
13f
12h
13
12g
12j
13d
A
A
12i
12e
13h
12d
13i
12
13e
12c
12f
11a
12b
12a
11b
11

[図3]

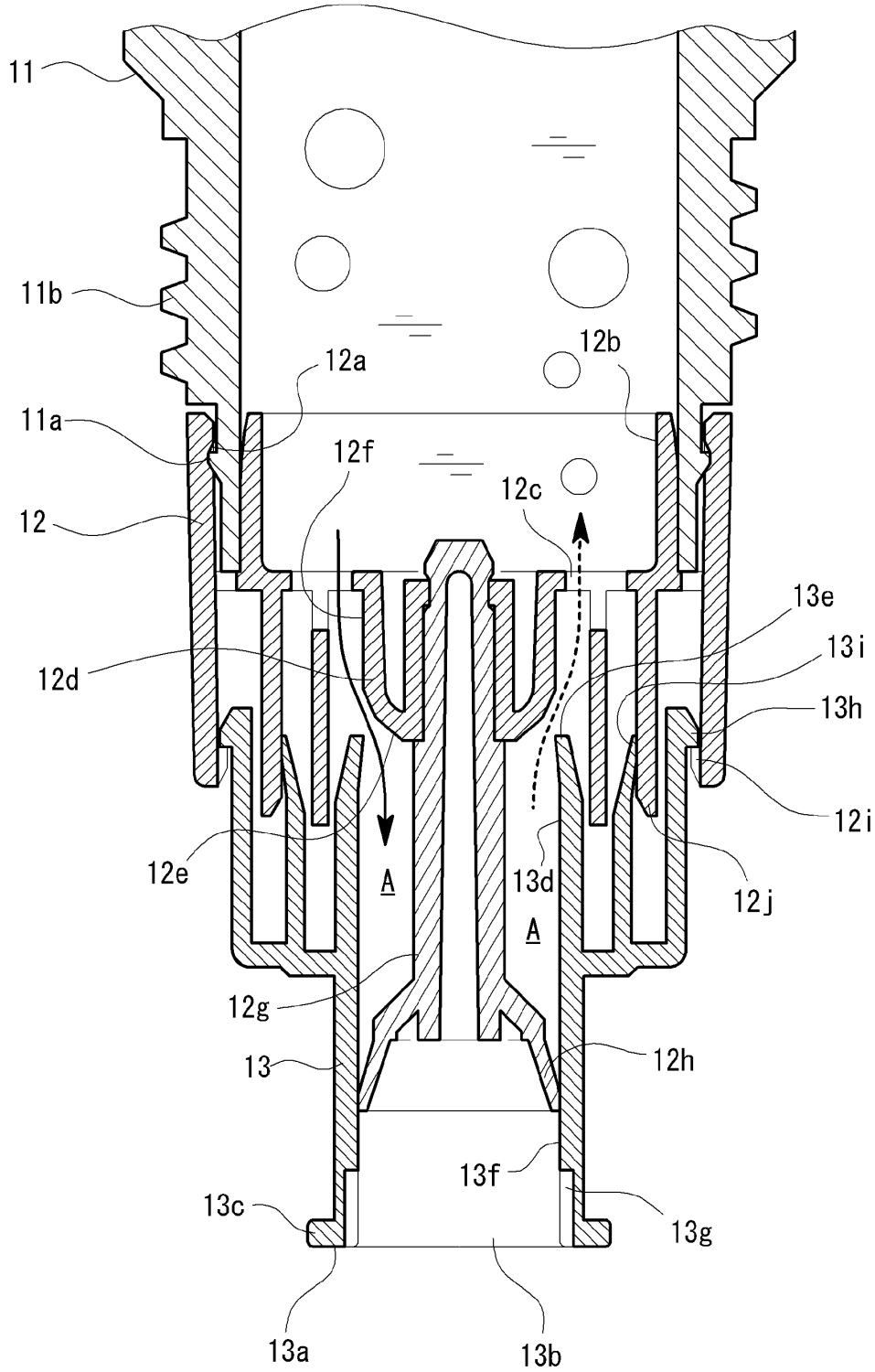
11
11b
12a
12b
11a
12f
12c
12
13e
13i
12d
13h
12i
12e
A
13d
A
12j
12g
13
12h
13f
13c
13g
13a
13b

[図4]

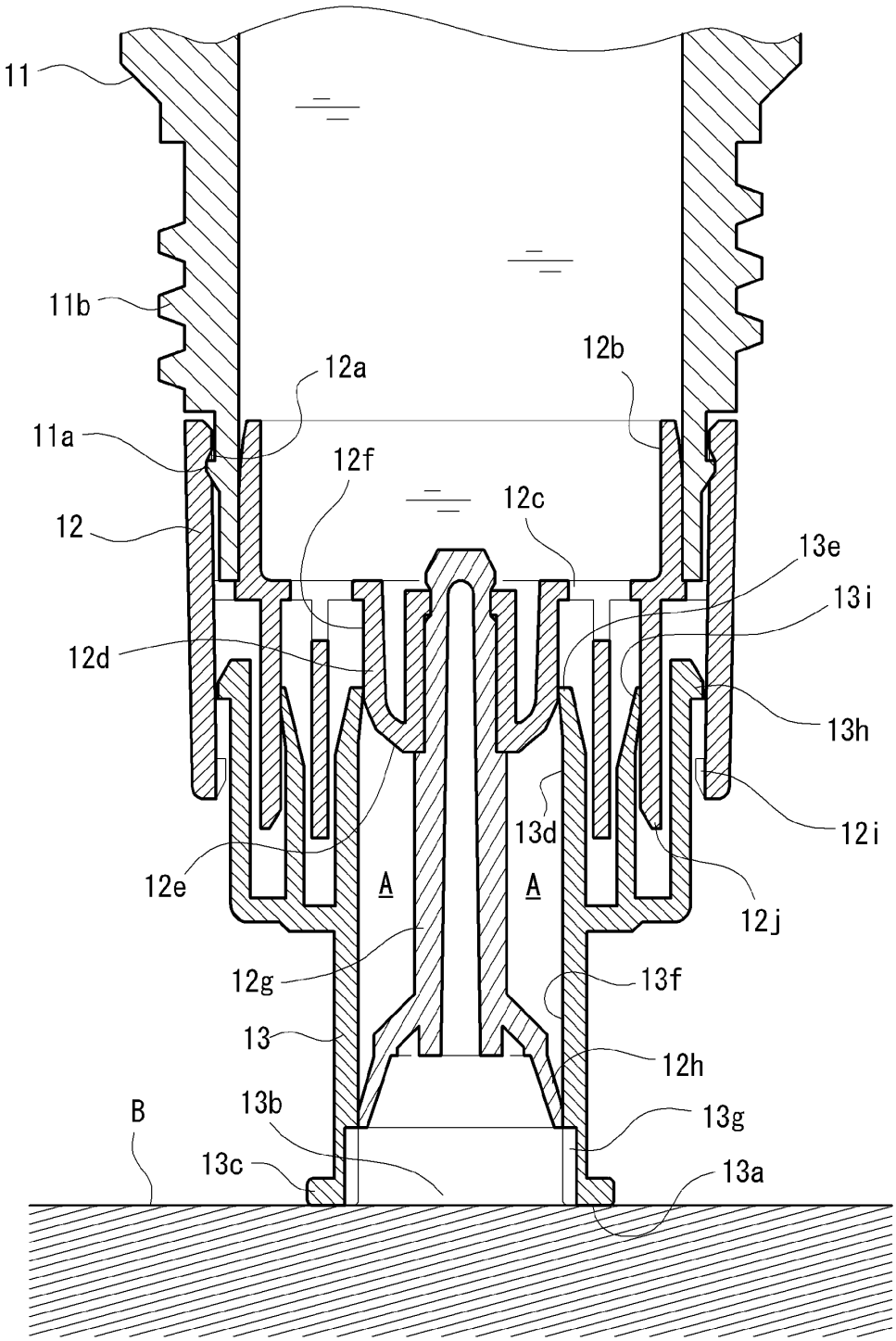
11
11b
12a
12b
11a
12f
12c
12
13e
13i
12d
13h
13d
12i
12e
A
A
12j
12g
13f
13
12h
B
13b
13g
13c
13a

[図5]

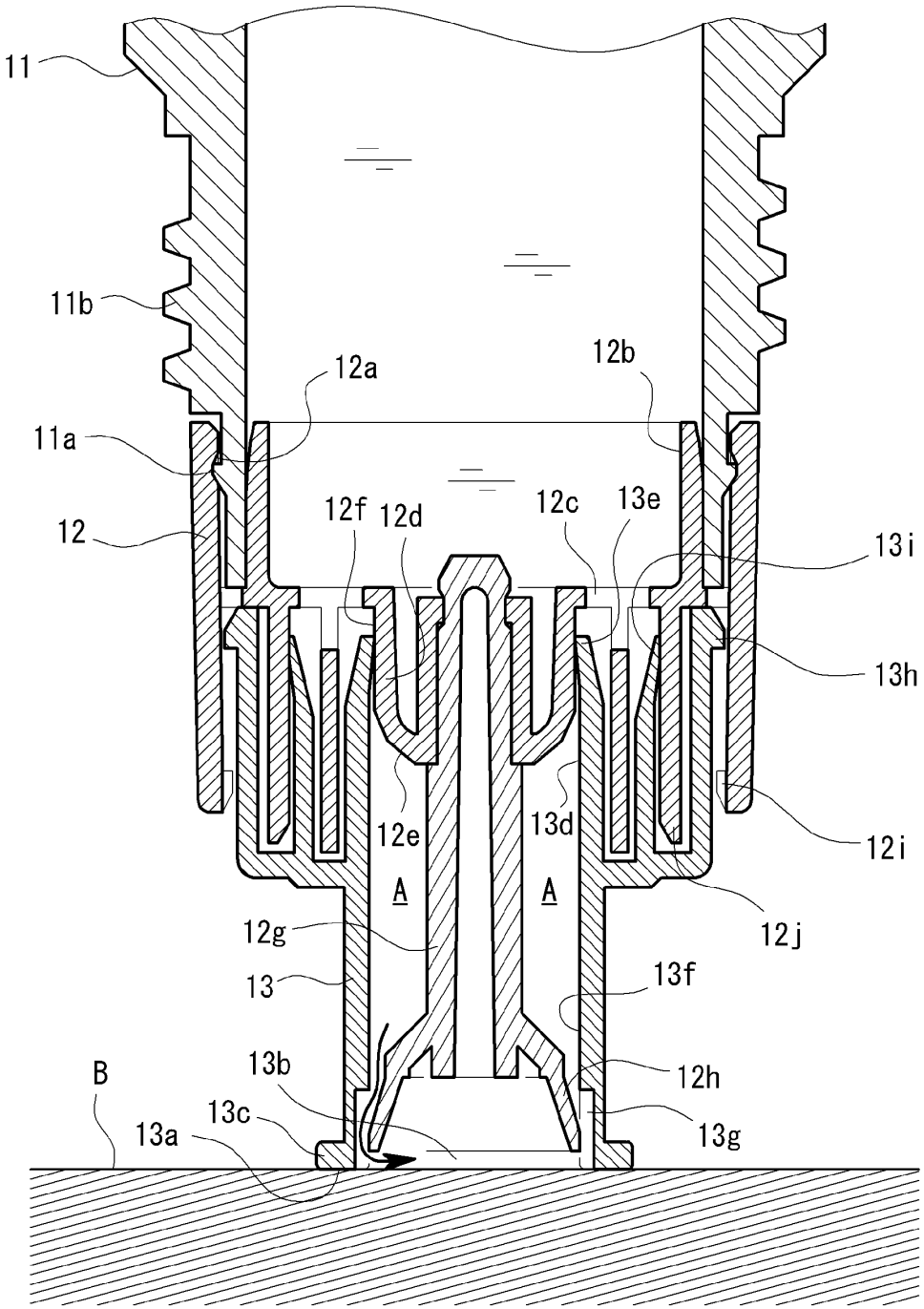
11
11b
12a
12b
11a
12
12f
12d
12c
13e
13i
13h
12e
13d
12i
A
A
12g
12j
13
13f
B
13b
12h
13c
13g
13a

[図6]

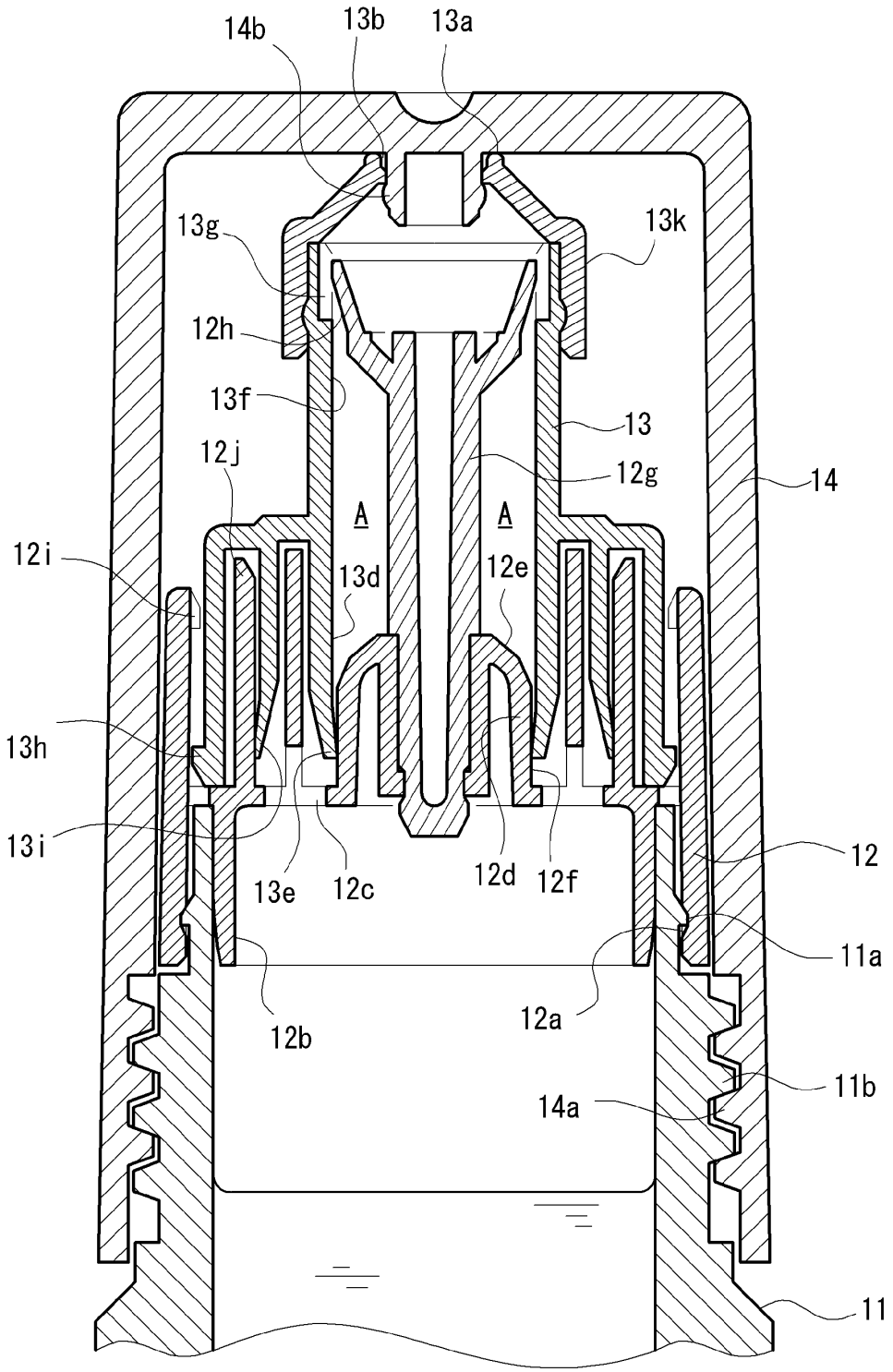
14b
13b
13a
13g
13k
12h
13f
13
12j
12g
14
A
A
12i
13d
12e
13h
13i
13e
12c
12d
12f
12
11a
12b
12a
11b
14a
11

[図7]

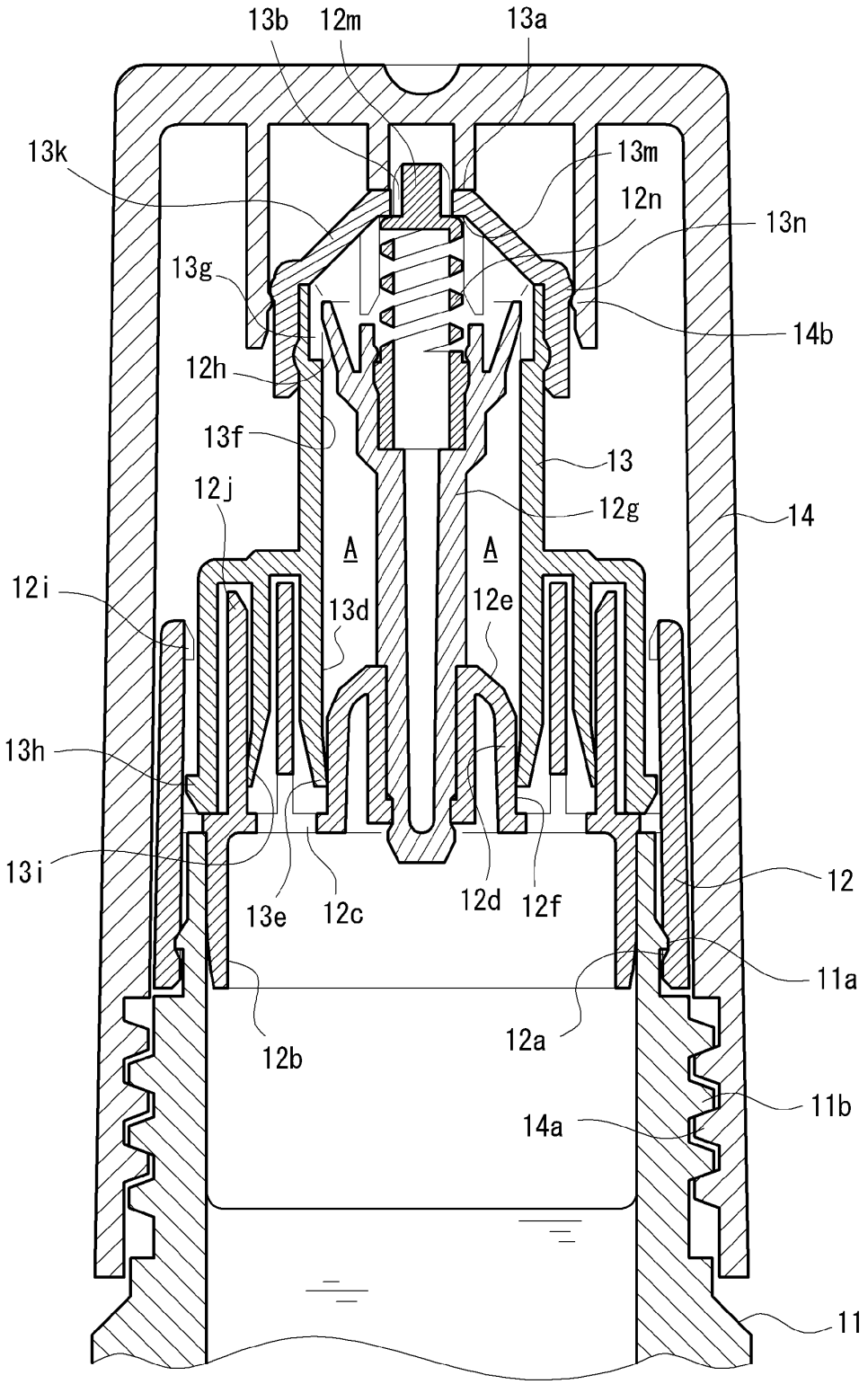
13b
12m
13a
13k
13m
12n
13n
13g
14b
12h
13f
13
12j
12g
14
A
A
12i
13d
12e
13h
13i
12
13e
12c
12d
12f
11a
12b
12a
11b
14a
11

[図8]

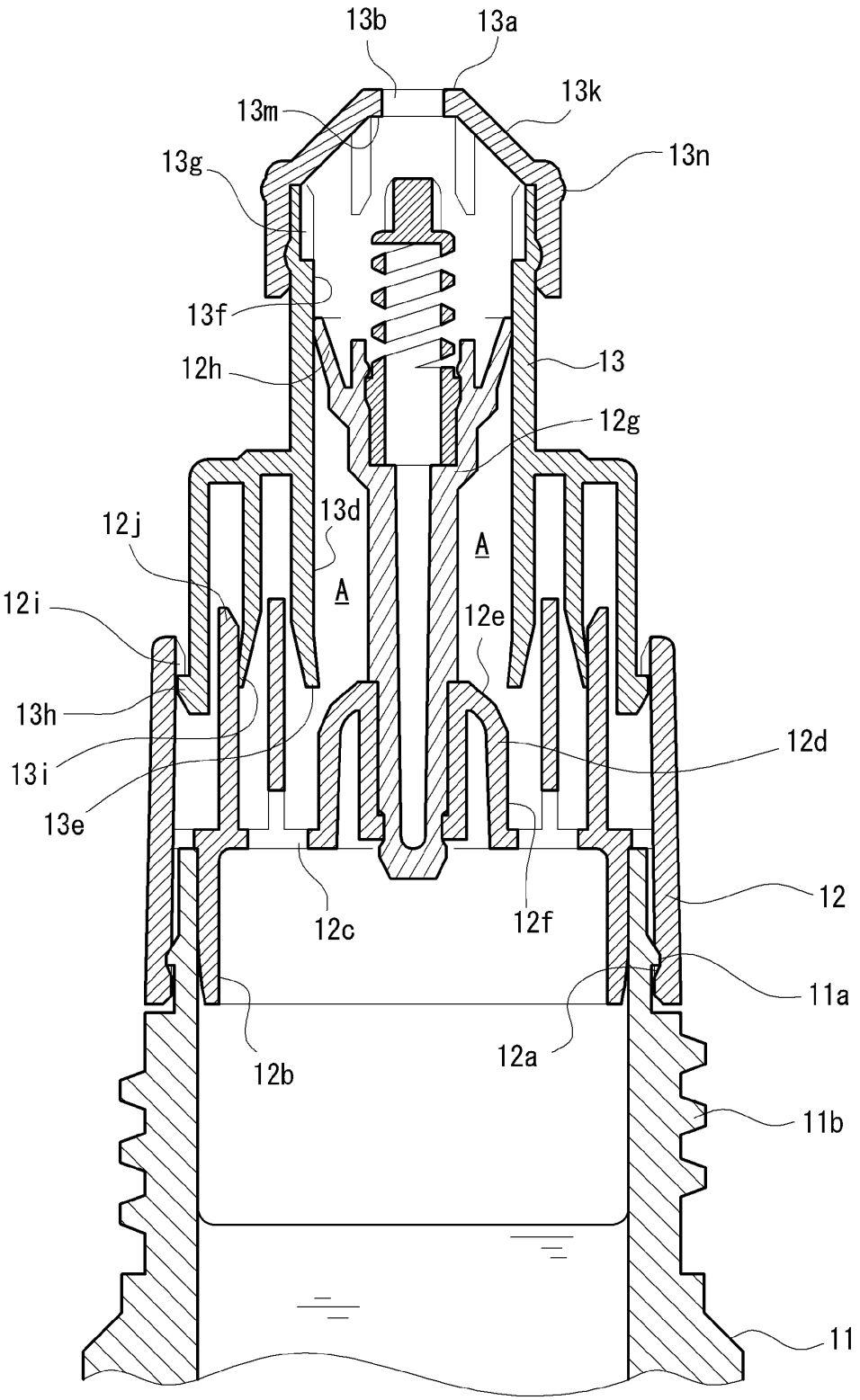
13b
13a
13m
13k
13g
13n
13f
12h
13
12g
13d
12j
A
A
12i
12e
13h
12d
13i
13e
12
12c
12f
11a
12b
12a
11b
11

[図9]

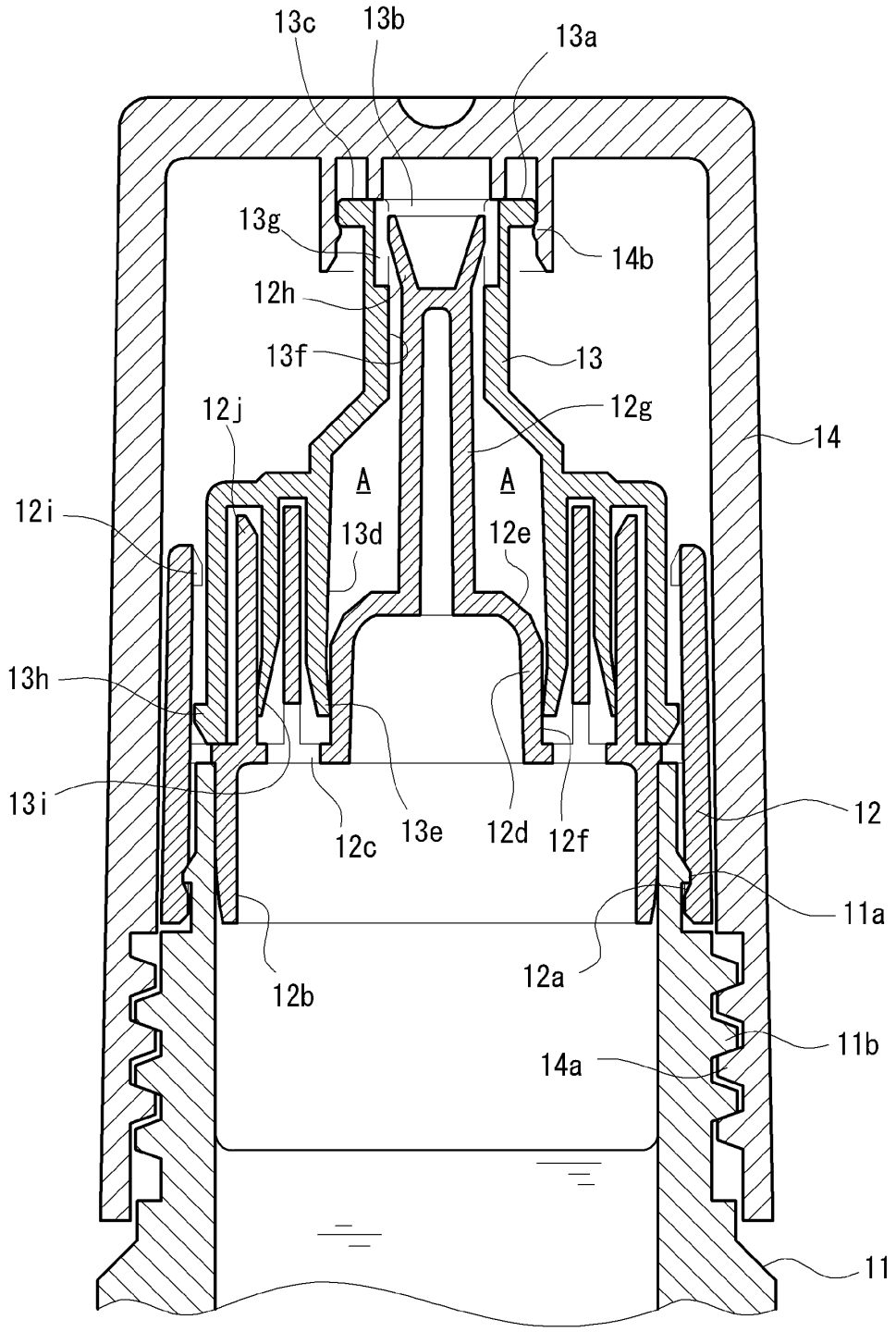
13c
13b
13a
13g
14b
12h
13f
13
12j
12g
14
A
A
12i
13d
12e
13h
13i
12c
13e
12d
12f
12
11a
12b
12a
11b
14a
11

[図10]

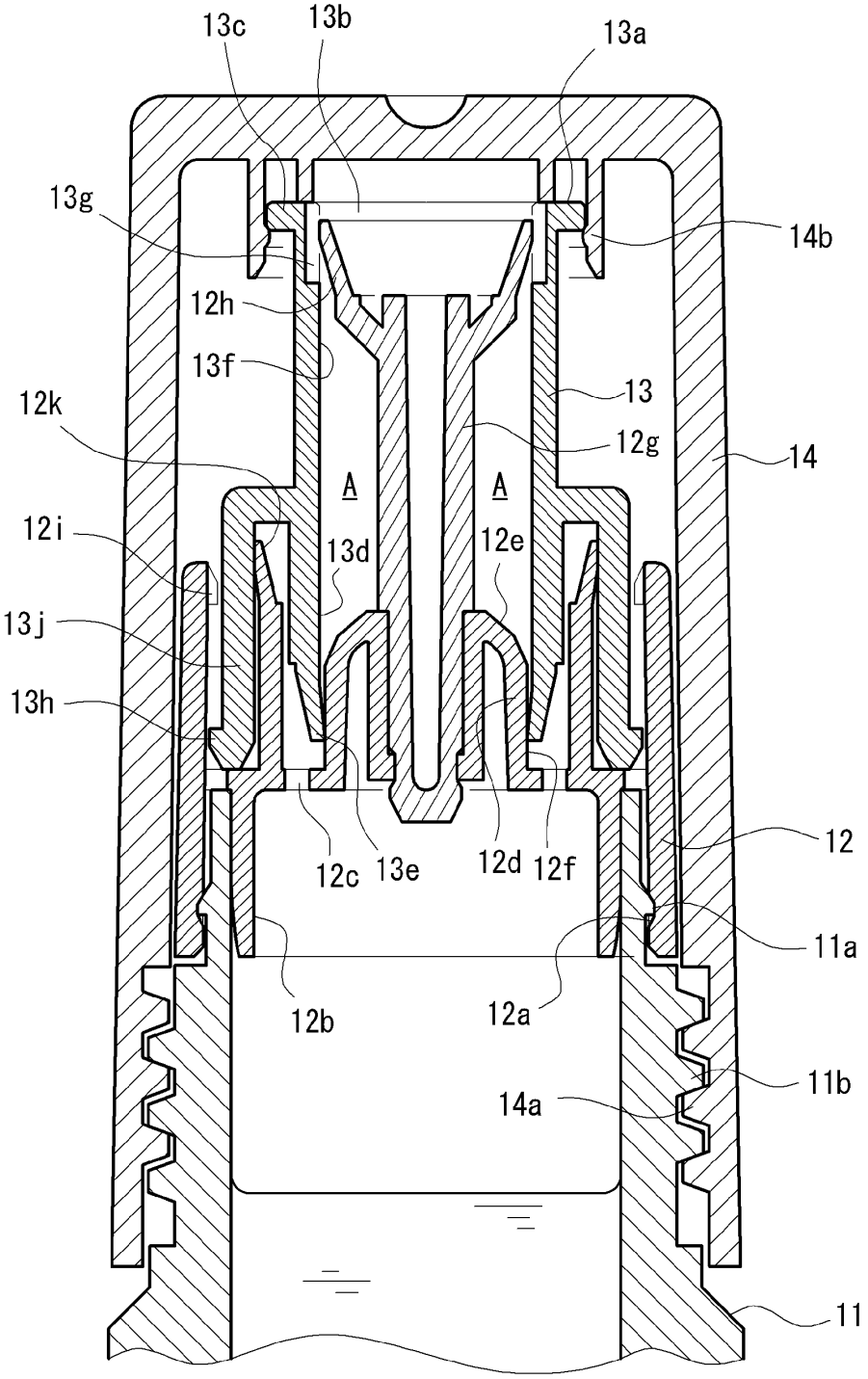
13c
13b
13a
13g
14b
12h
13f
13
12k
12g
14
A
A
12i
13d
12e
13j
13h
12
12c
13e
12d
12f
11a
12b
12a
11b
14a
11

[図11]

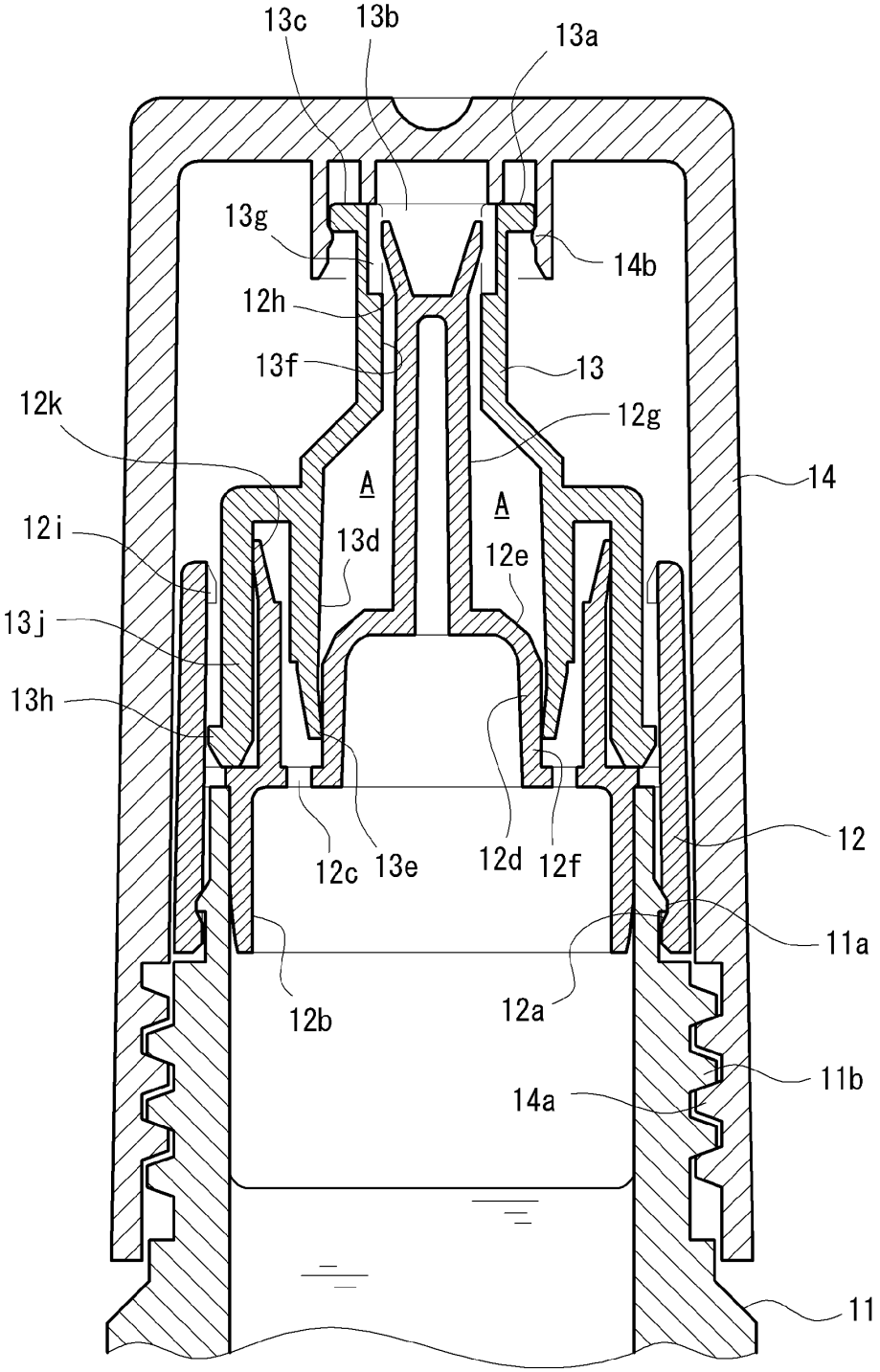
13c
13b
13a
13g
14b
12h
13f
13
12k
12g
14
A
A
12i
13d
12e
13j
13h
12
12c
13e
12d
12f
11a
12b
12a
11b
14a
11