(12) INTERNATIONAL APPLICATION PUBLISHED UNDER THE PATENT COOPERATION TREATY (PCT)

(19) World Intellectual Property Organization
International Bureau

(43) International Publication Date
18 March 2010 (18.03.2010)

PCT

(10) International Publication Number
WO 2010/030987 A1

(51) International Patent Classification:
F41A 5/00 (2006.01)

(21) International Application Number:
PCT/US2009/056830

(22) International Filing Date:
14 September 2009 (14.09.2009)

(25) Filing Language: English

(26) Publication Language: English

(30) Priority Data:
61/096,697 12 September 2008 (12.09.2008) US
12/559,047 14 September 2009 (14.09.2009) US

(71) Applicant *(for all designated States except US)*: **COLT DEFENSE LLC** [US/US]; P.O. Box 1868, Hartford, CT 06144-1868 (US).

(72) Inventors; and

(75) Inventors/Applicants *(for US only)*: **AUDIBERT, Kevin** [US/US]; 27 Overvale Road, Wolcott, CT 06716 (US). **JOSEY, Michael** [US/US]; 7 Blueberry Lane, Farmington, CT 06032 (US). **HCHSTRATE, Paul** [US/US]; 70 Maxwell Drive, Plantsville, CT 06479 (US).

(74) Agents: **MARCOVICI, Janik** et al.; Perman & Green, LLP, 99 Hawley Lane, Stratford, CT 06614 (US).

(81) Designated States *(unless otherwise indicated, for every kind of national protection available)*: AE, AG, AL, AM, AO, AT, AU, AZ, BA, BB, BG, BH, BR, BW, BY, BZ, CA, CH, CL, CN, CO, CR, CU, CZ, DE, DK, DM, DO, DZ, EC, EE, EG, ES, FI, GB, GD, GE, GH, GM, GT, HN, HR, HU, ID, IL, IN, IS, JP, KE, KG, KM, KN, KP, KR, KZ, LA, LC, LK, LR, LS, LT, LU, LY, MA, MD, ME, MG, MK, MN, MW, MX, MY, MZ, NA, NG, NI, NO, NZ, OM, PE, PG, PH, PL, PT, RO, RS, RU, SC, SD, SE, SG, SK, SL, SM, ST, SV, SY, TJ, TM, TN, TR, TT, TZ, UA, UG, US, UZ, VC, VN, ZA, ZM, ZW.

(84) Designated States *(unless otherwise indicated, for every kind of regional protection available)*: ARIPO (BW, GH, GM, KE, LS, MW, MZ, NA, SD, SL, SZ, TZ, UG, ZM, ZW), Eurasian (AM, AZ, BY, KG, KZ, MD, RU, TJ, TM), European (AT, BE, BG, CH, CY, CZ, DE, DK, EE, ES, FI, FR, GB, GR, HR, HU, IE, IS, IT, LT, LU, LV, MC, MK, MT, NL, NO, PL, PT, RO, SE, SI, SK, SM, TR), OAPI (BF, BJ, CF, CG, CI, CM, GA, GN, GQ, GW, ML, MR, NE, SN, TD, TG).

Published:

— *with international search report (Art. 21(3))*

(54) **Title**: FIREARM HAVING A HYBRID INDIRECT GAS OPERATING SYSTEM

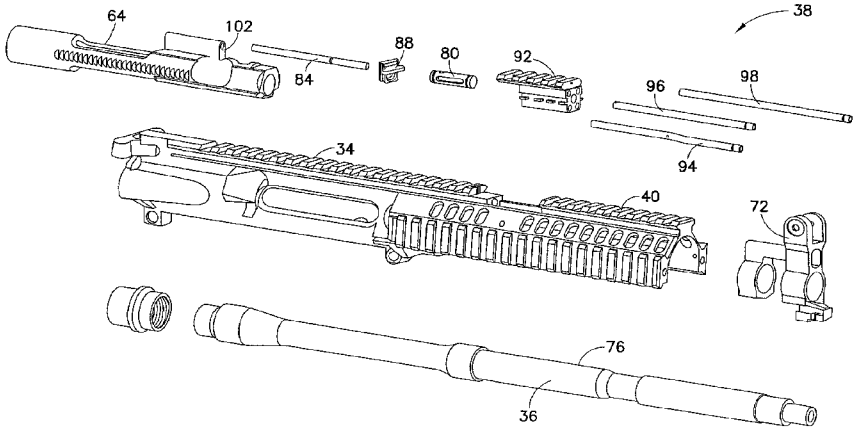

FIG.3

(57) **Abstract**: An automatic or semi-automatic rifle. The rifle has a receiver and a bolt having a striking surface, the bolt enclosed within the receiver. A barrel has a bore, the barrel coupled to the receiver. An indirect gas operating system has a cylinder and a piston, the indirect gas operating system mounted with a mounting structure substantially independent of the barrel. The cylinder is in communication with the bore, and the piston is fitted to the cylinder and disposed for striking the striking surface and displacing the bolt assembly.

WO 2010/030987 A1