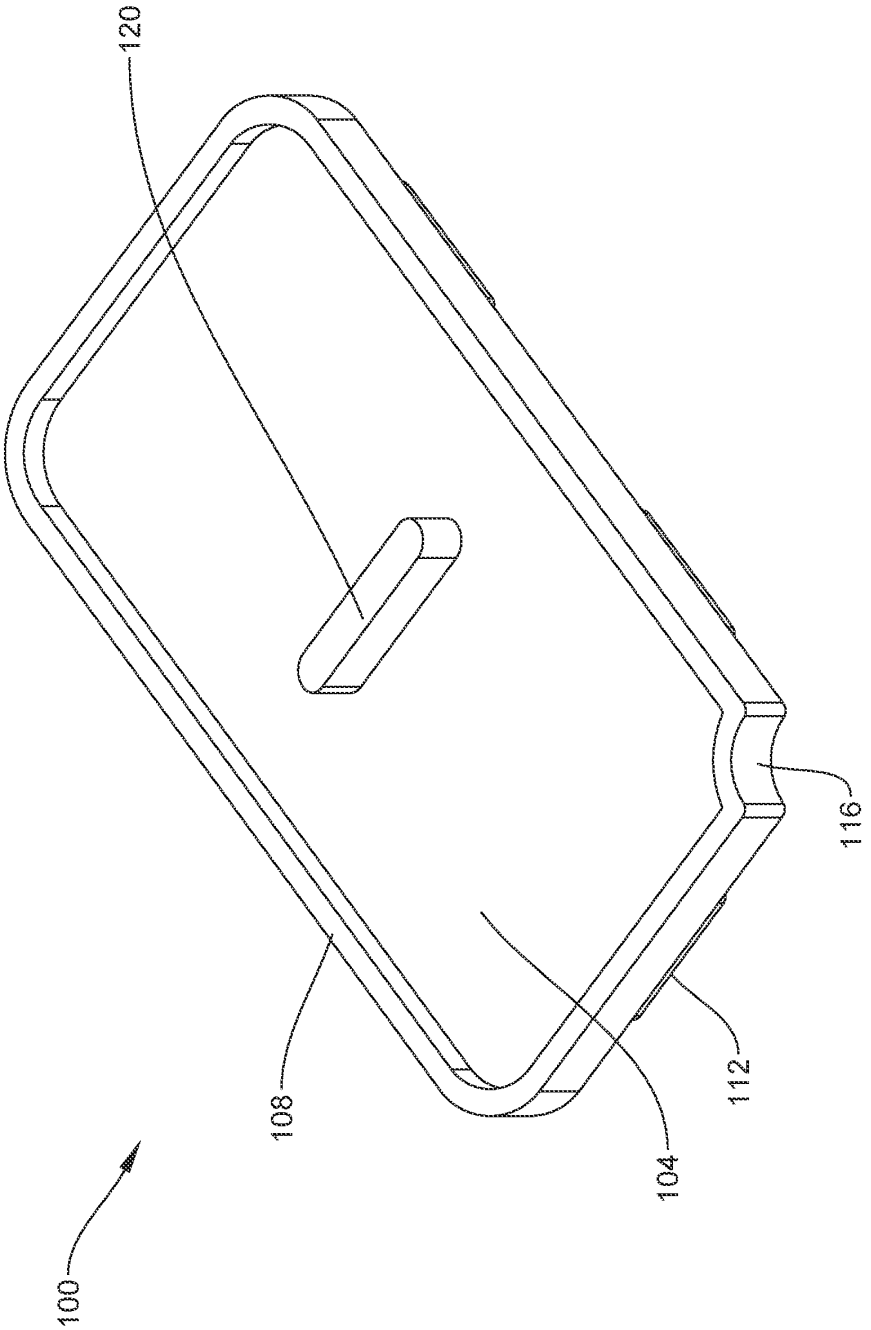

FIG. 1A

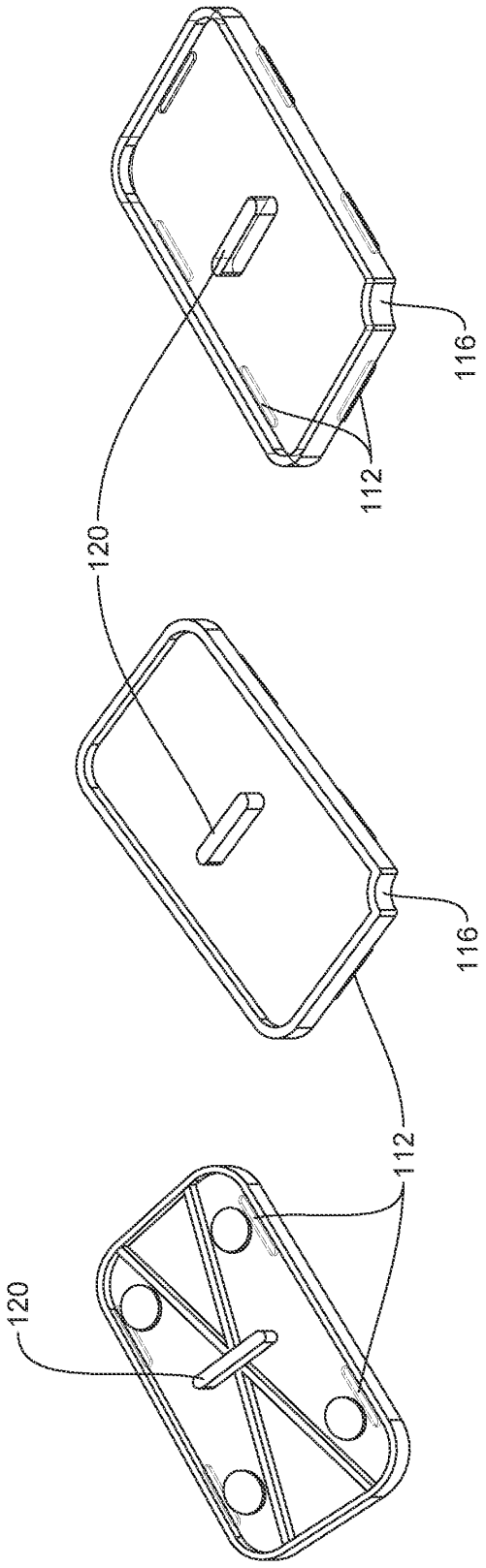

FIG. 1D

FIG. 1C

FIG. 1B

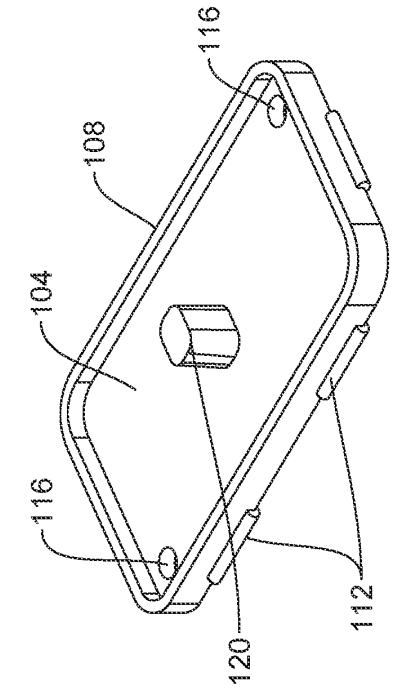

FIG. 1F

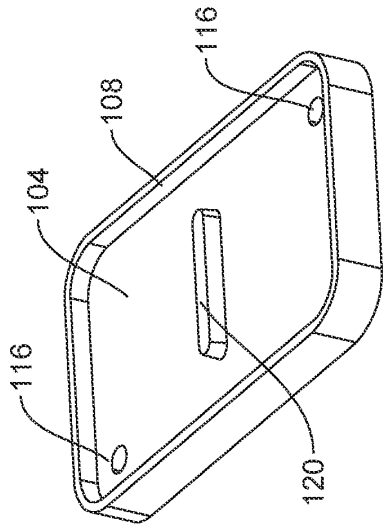

FIG. 1E

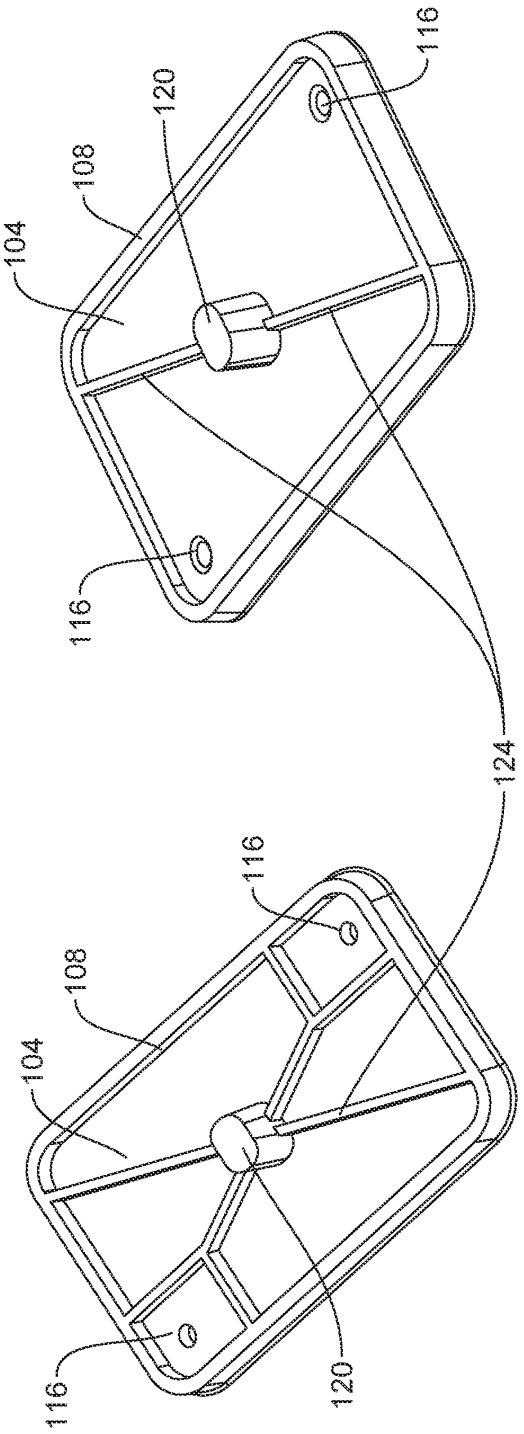

FIG. 1H

FIG. 1G

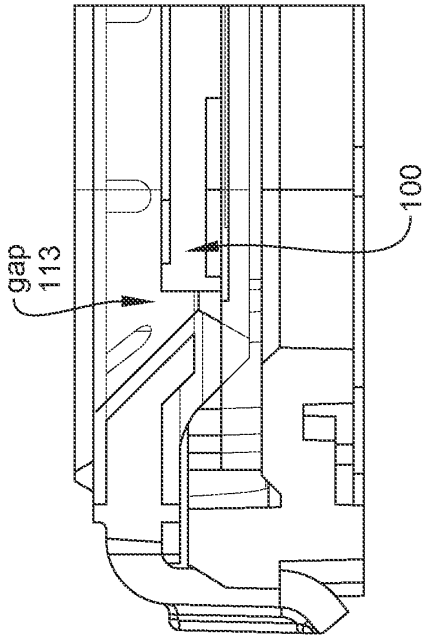

FIG. 1I

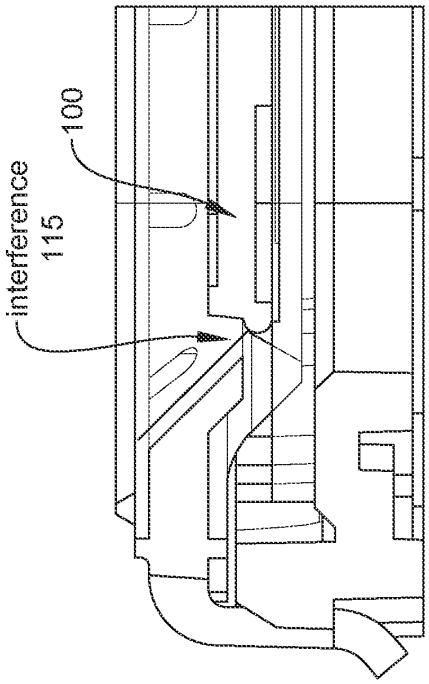

FIG. 1J

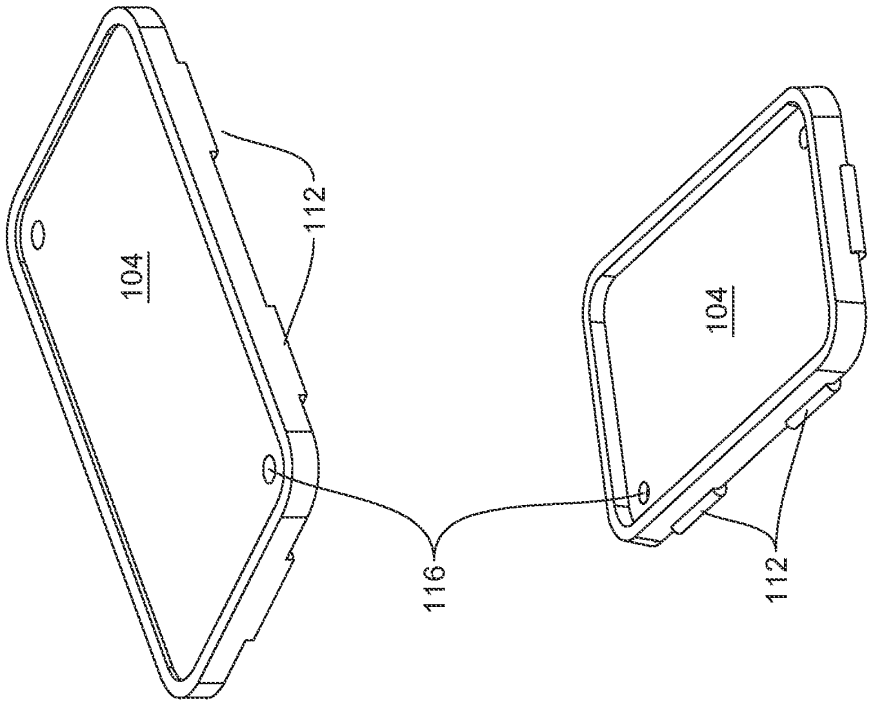

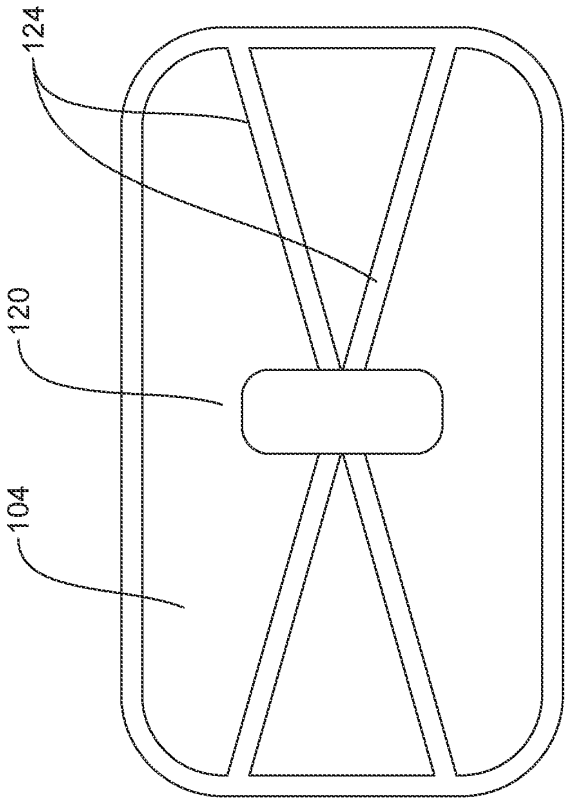

FIG. 1K

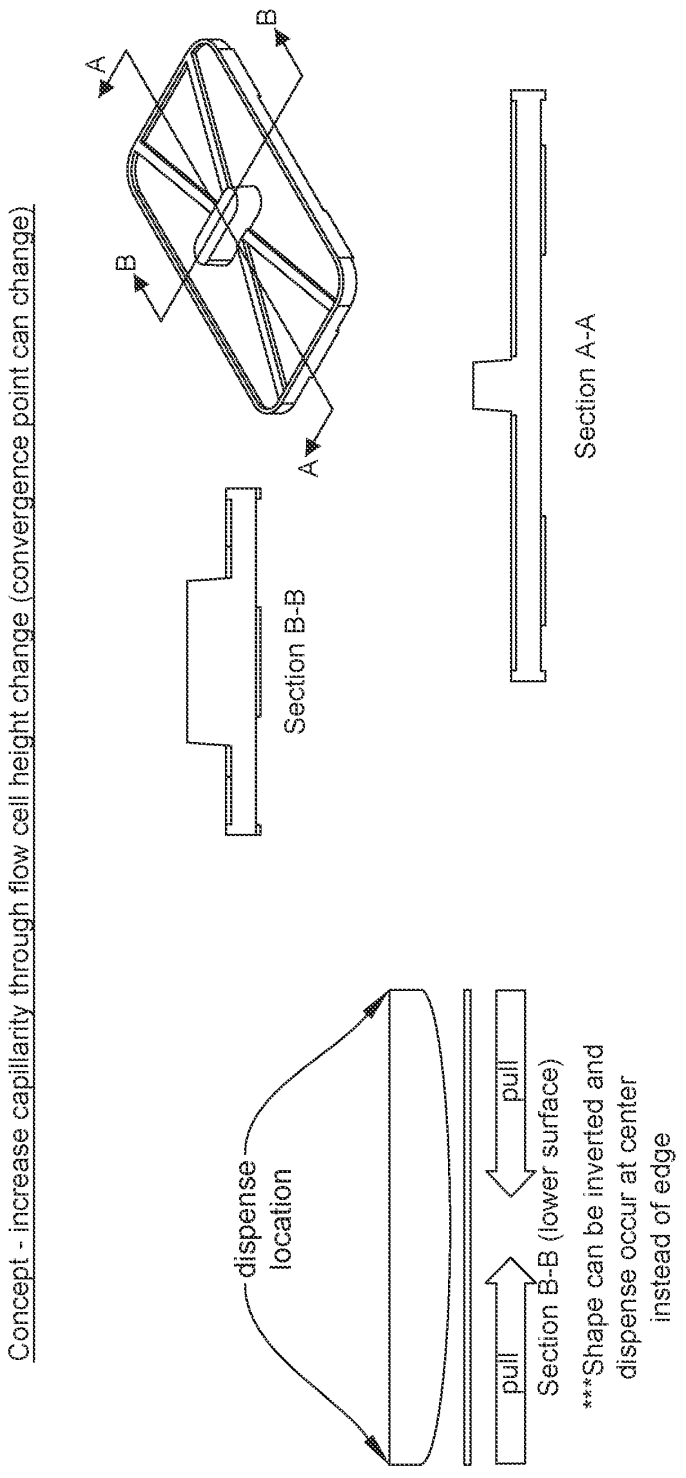
Concept - increase capillarity through flow cell height change (convergence point can change)
A
B
B
A
Section B-B
Section A-A
dispense location
pull
pull
Section B-B (lower surface)
***Shape can be inverted and dispense occur at center instead of edge

FIG. 1L

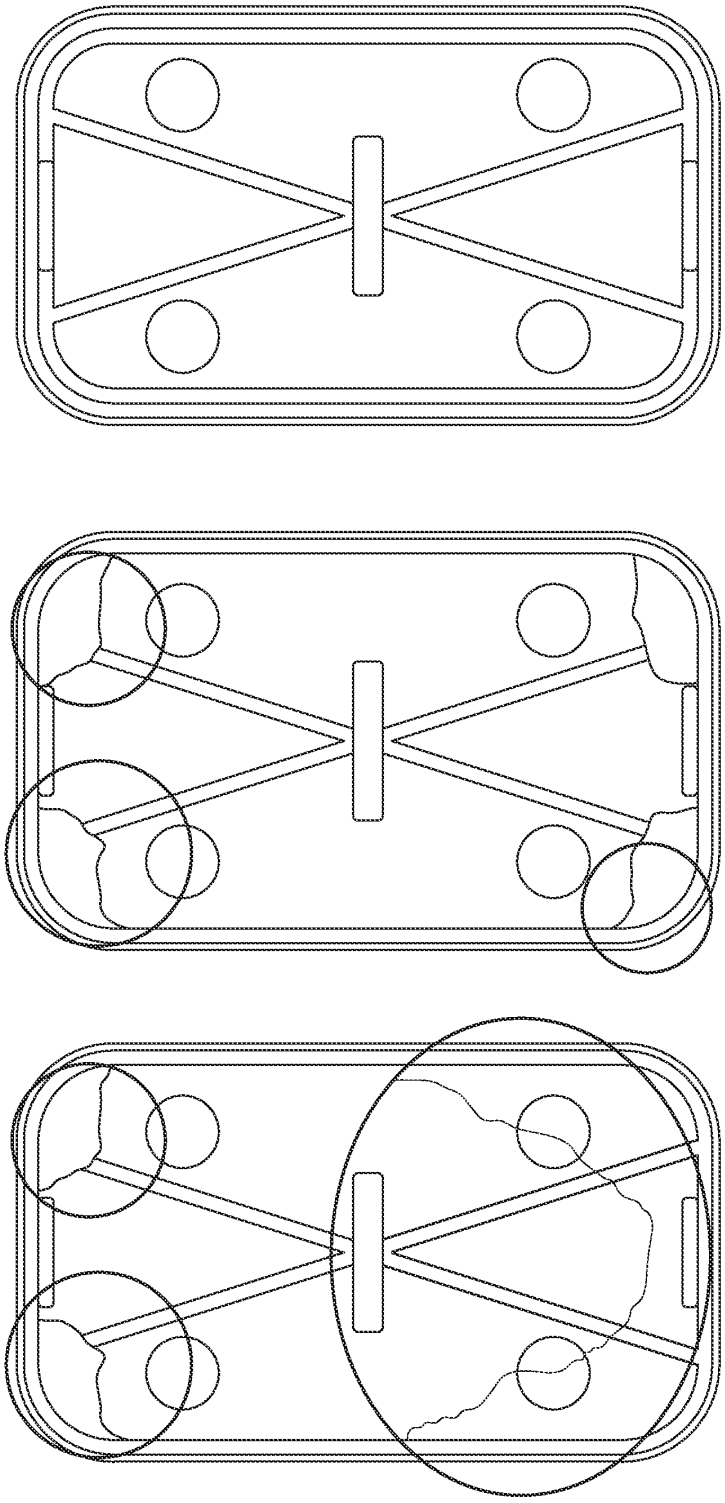

FIG. 2

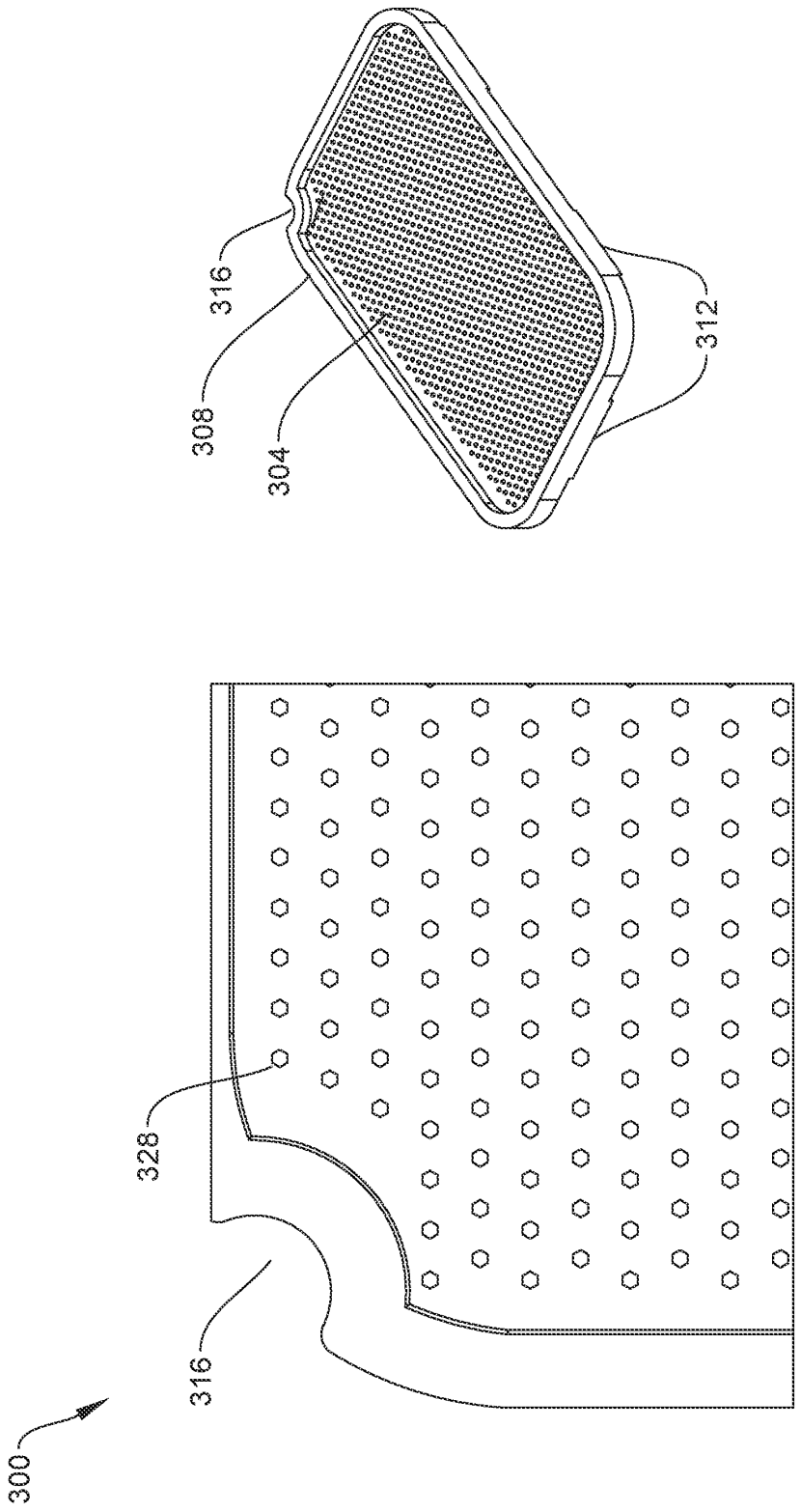

FIG. 3A

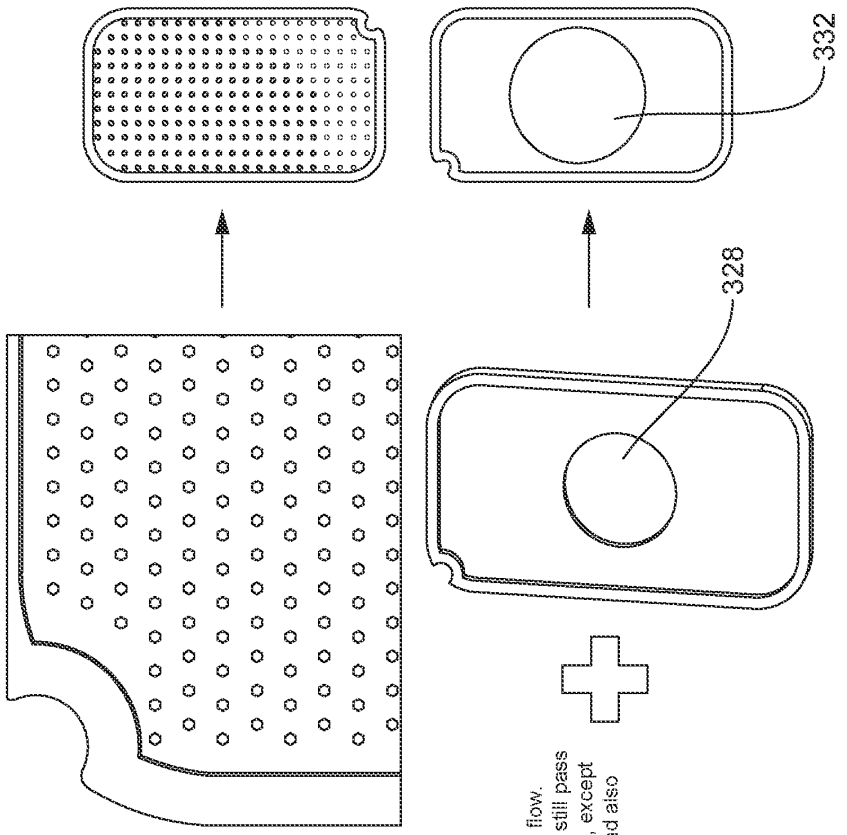

Porous PTFE Adhesive-Back Discs

- Color: White
- Maximum Temperature: 250° F

Stick these discs onto breather and other circular obstructing flow. Often used in the electronic and autc air, gas, and vapor can still pass through. These discs won't break down from most chemicals, except alkali n IP rated except for their adhesive, all seal out dust and also handle low-pressure washdowns, while IP66-rate

Adhesive ID

Dia.

1/2" Diameter Thickness	Overall Thickness	Removes Particle Size Down To, microns	Airfl
0.007"	0.015"	0.4	3.8
0.001"	0.018"	0.1	0.2
0.001"	0.018"	0.1	1.8

FIG. 3B

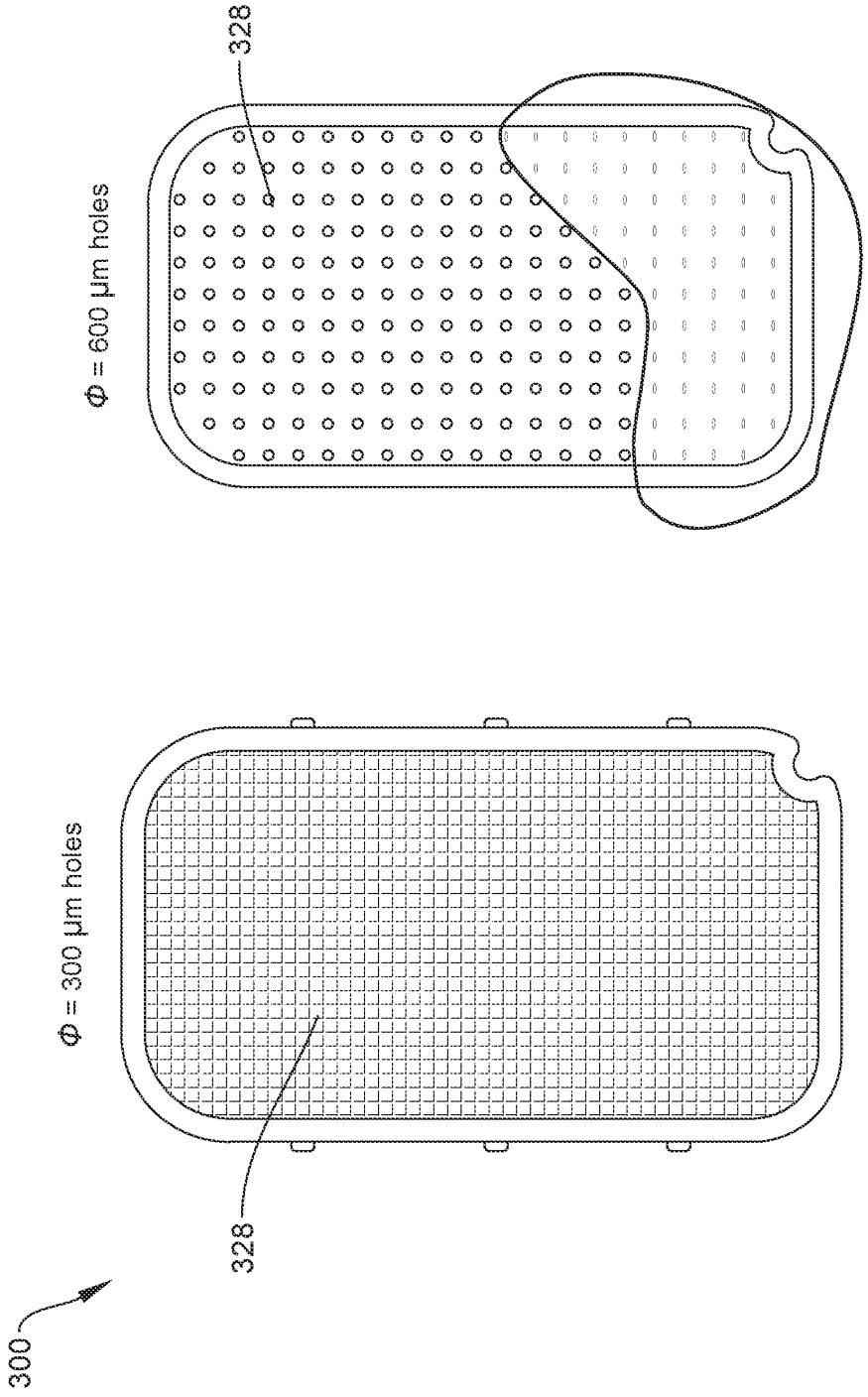

FIG. 3C

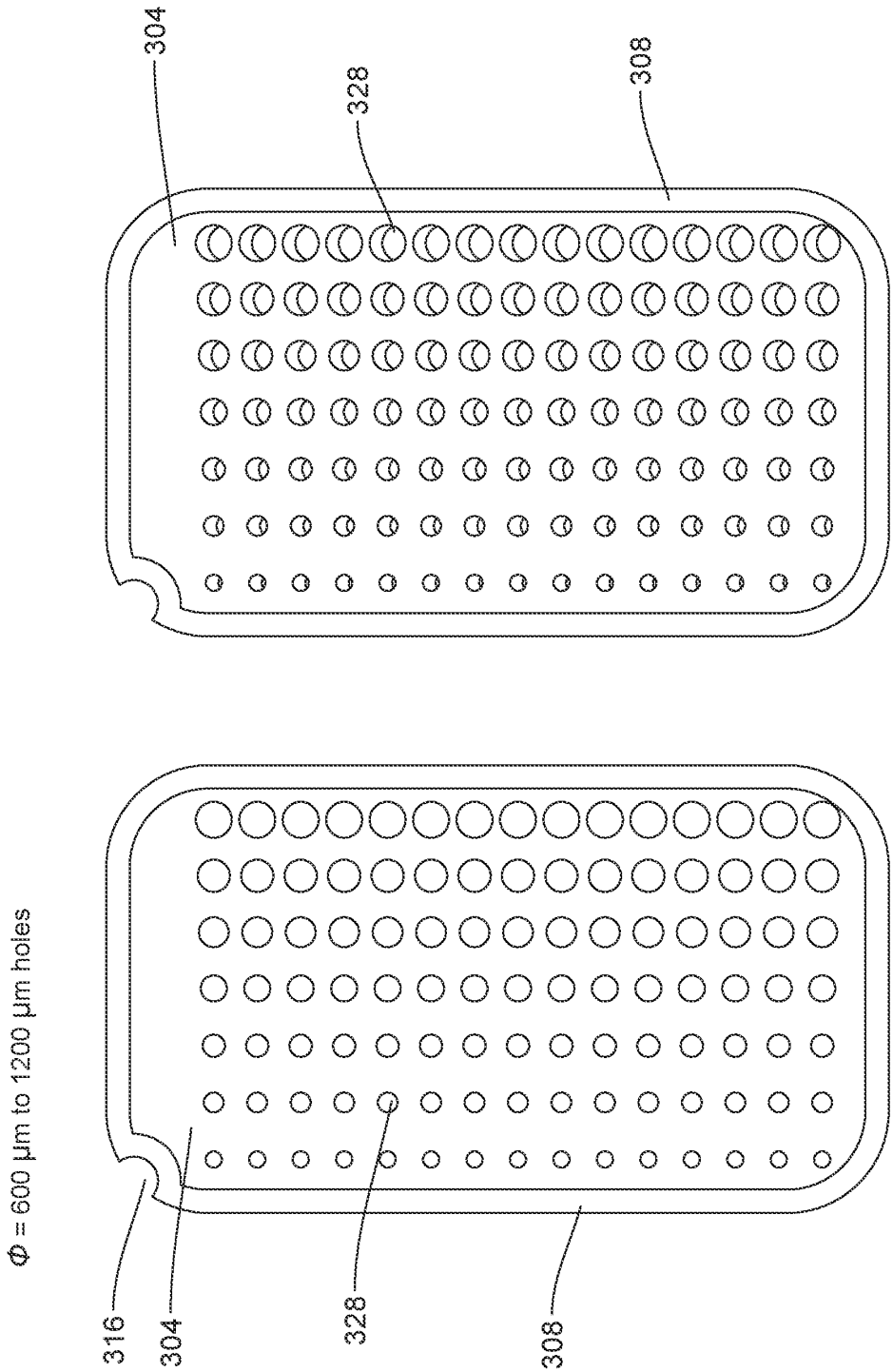

FIG. 3D

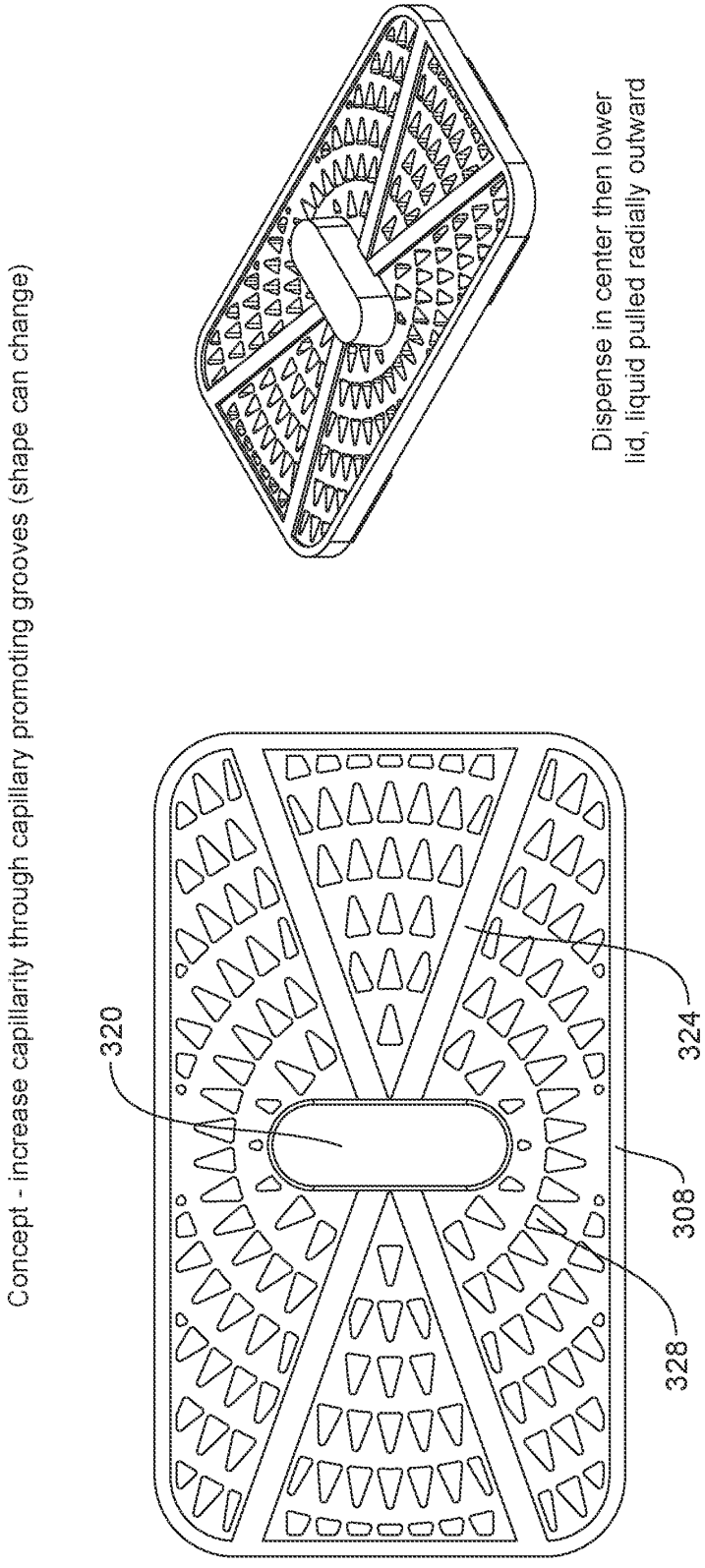
Concept - increase capillarity through capillary promoting grooves (shape can change)
Dispense in center then lower lid, liquid pulled radially outward
320
324
308
328

FIG. 3E

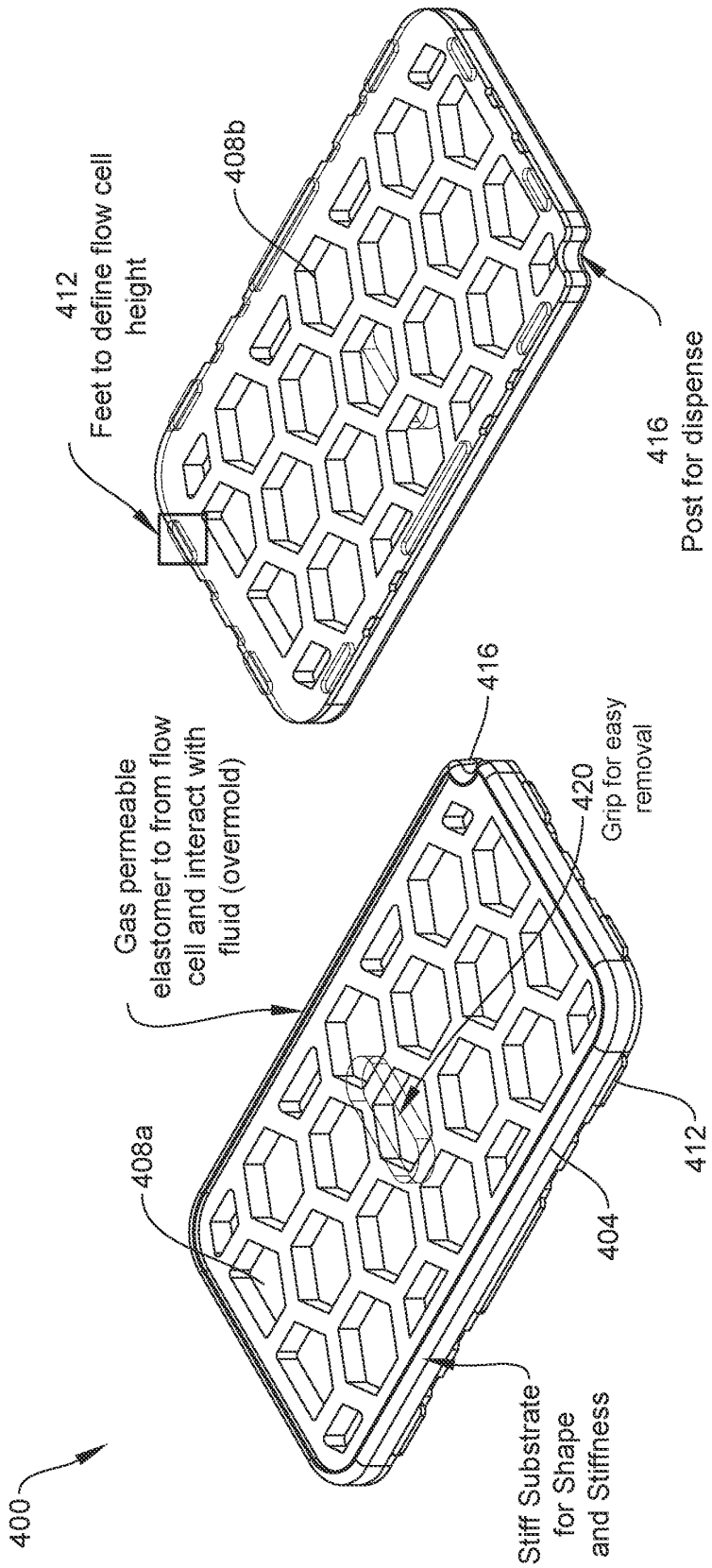
400
Stiff Substrate for Shape and Stiffness
404
412
408a
Gas permeable elastomer to from flow cell and interact with fluid (overmold)
420
Grip for easy removal
416
408b
412
Feet to define flow cell height
416
Post for dispense

FIG. 3F

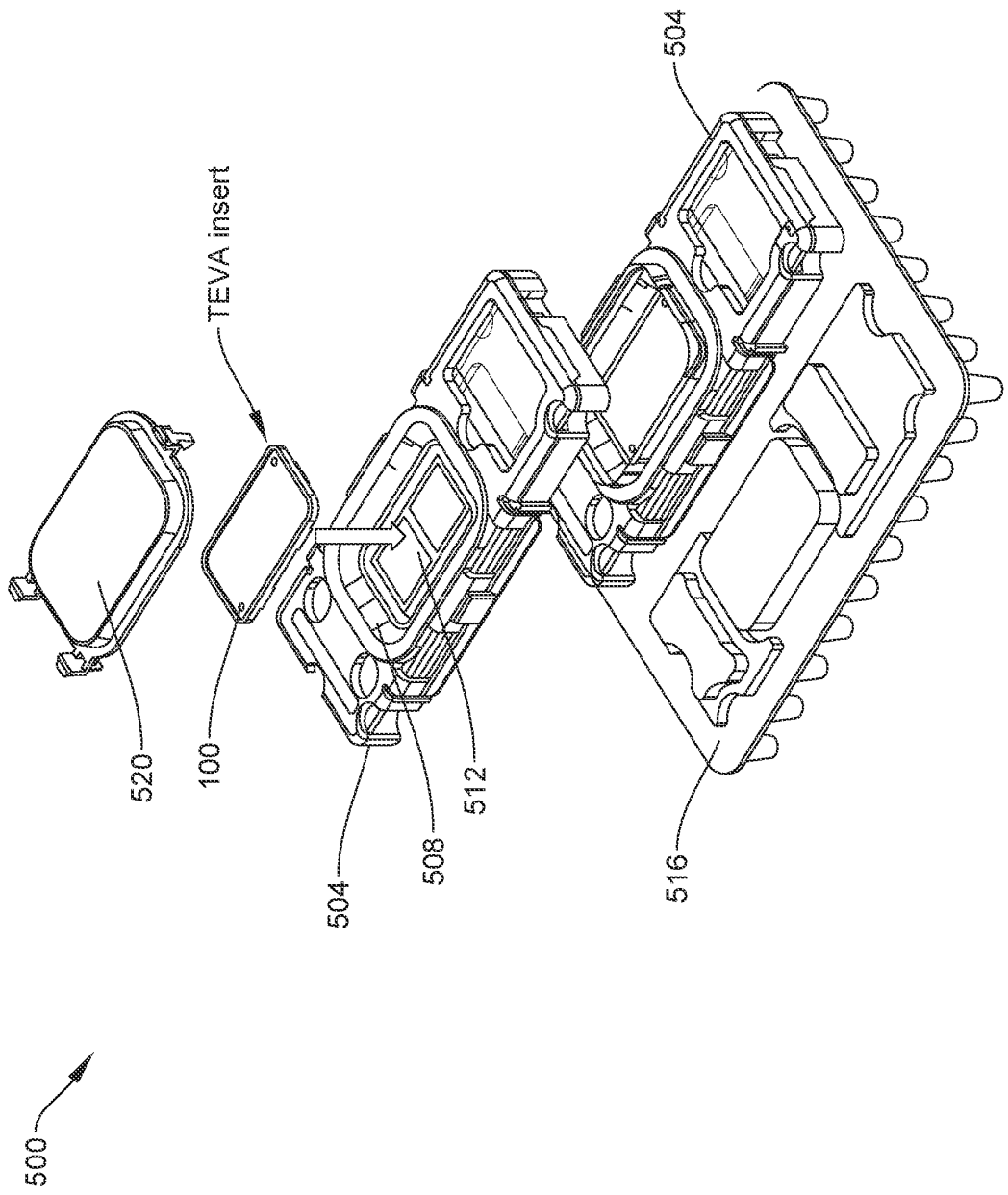

FIG. 4A

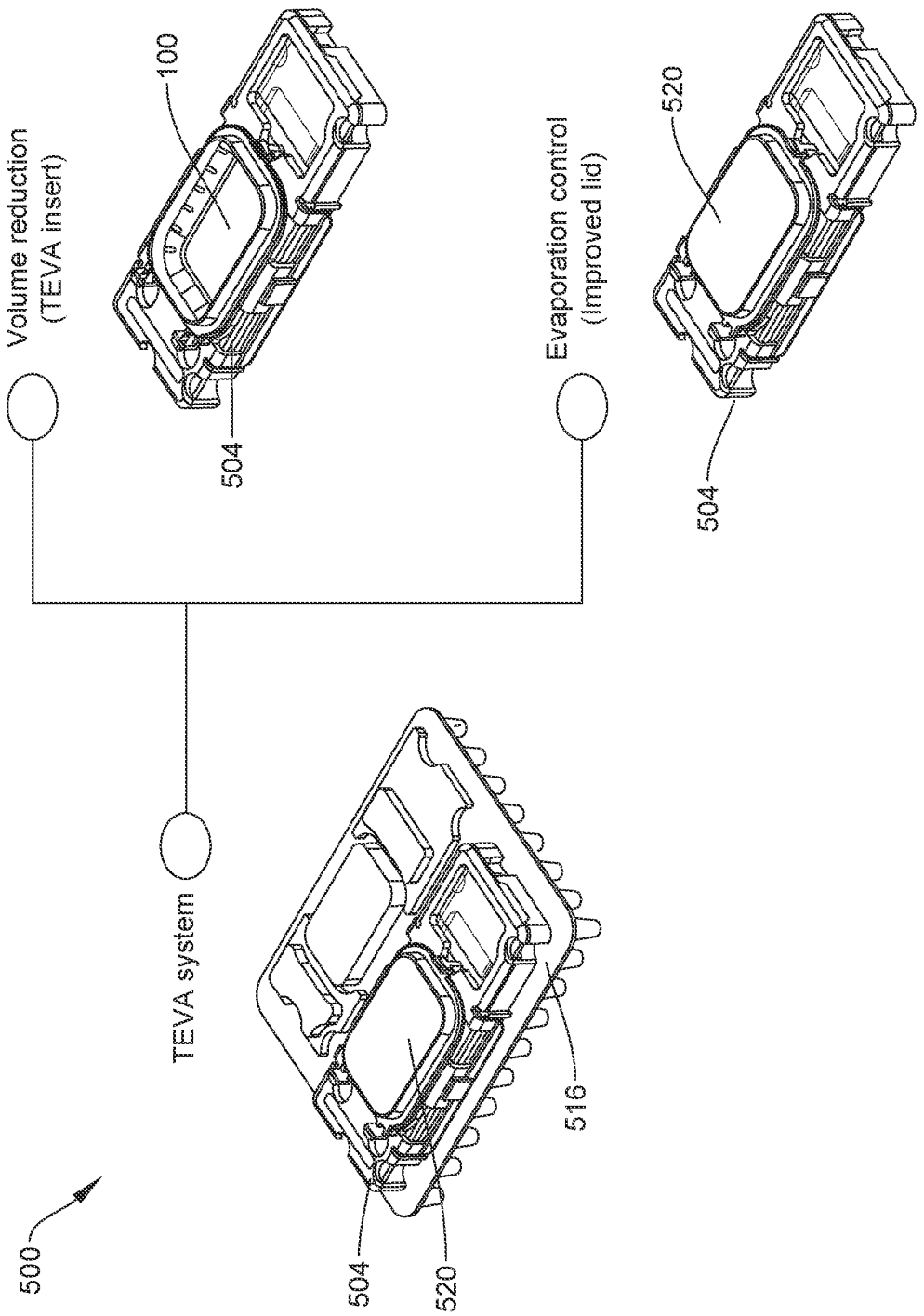
500
TEVA system
Volume reduction
(TEVA insert)
Evaporation control
(Improved lid)
100
504
520
516
504
520
504

FIG. 4B

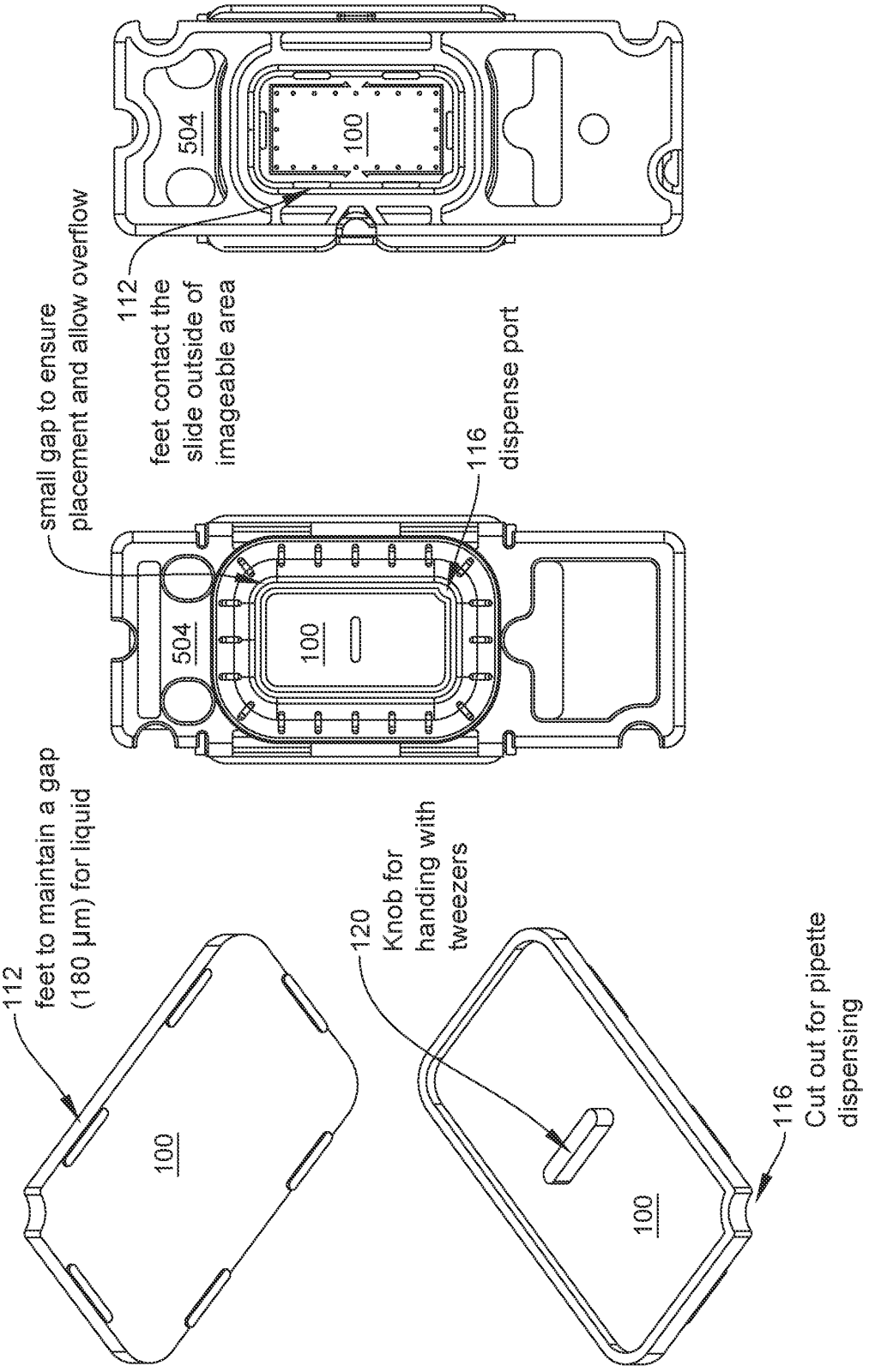
112
feet to maintain a gap
(180 µm) for liquid
100
120
Knob for
handing with
tweezers
116
Cut out for pipette
dispensing
100
small gap to ensure
placement and allow overflow
504
100
112
feet contact the
slide outside of
imageable area
116
dispense port
504
100

FIG. 4C

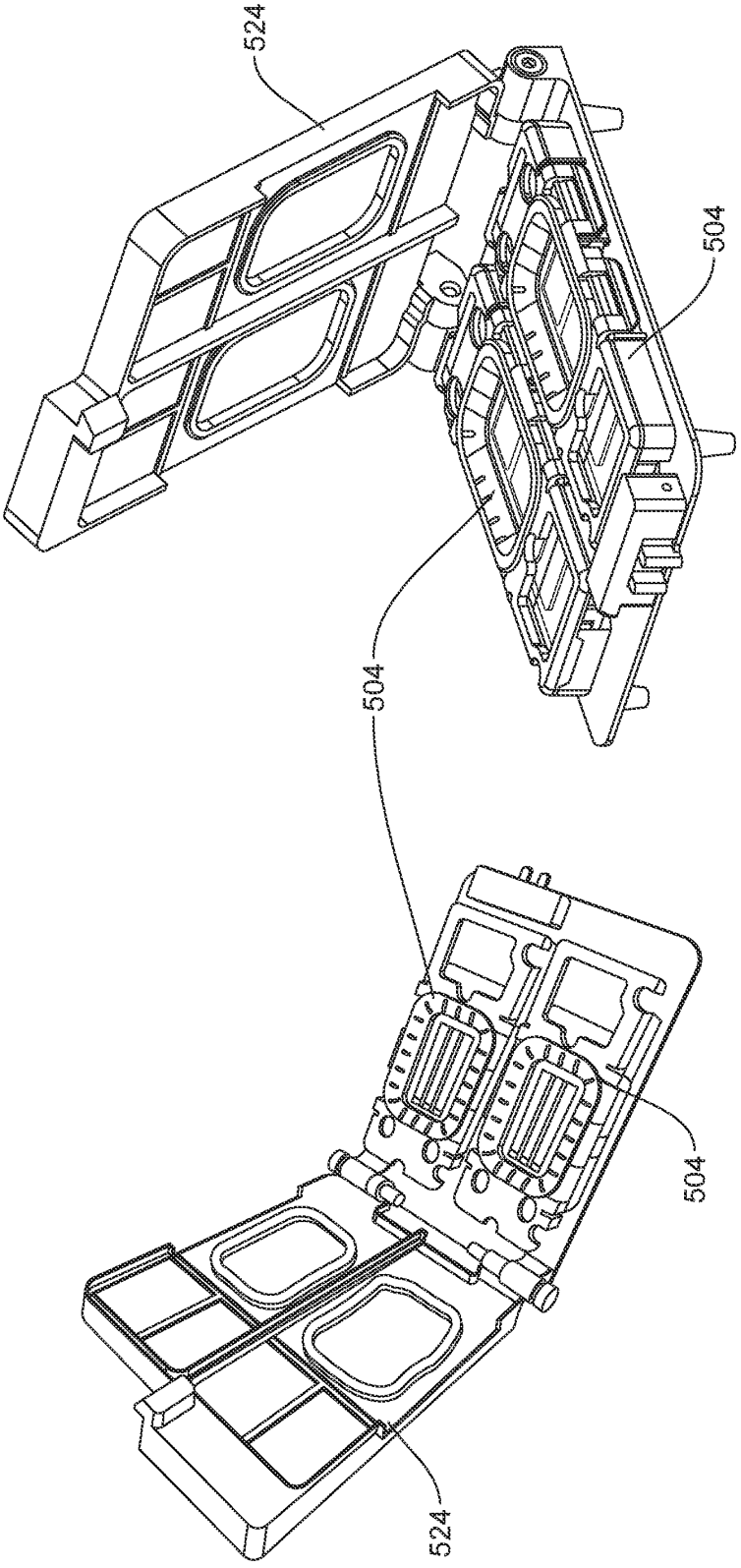

FIG. 4D

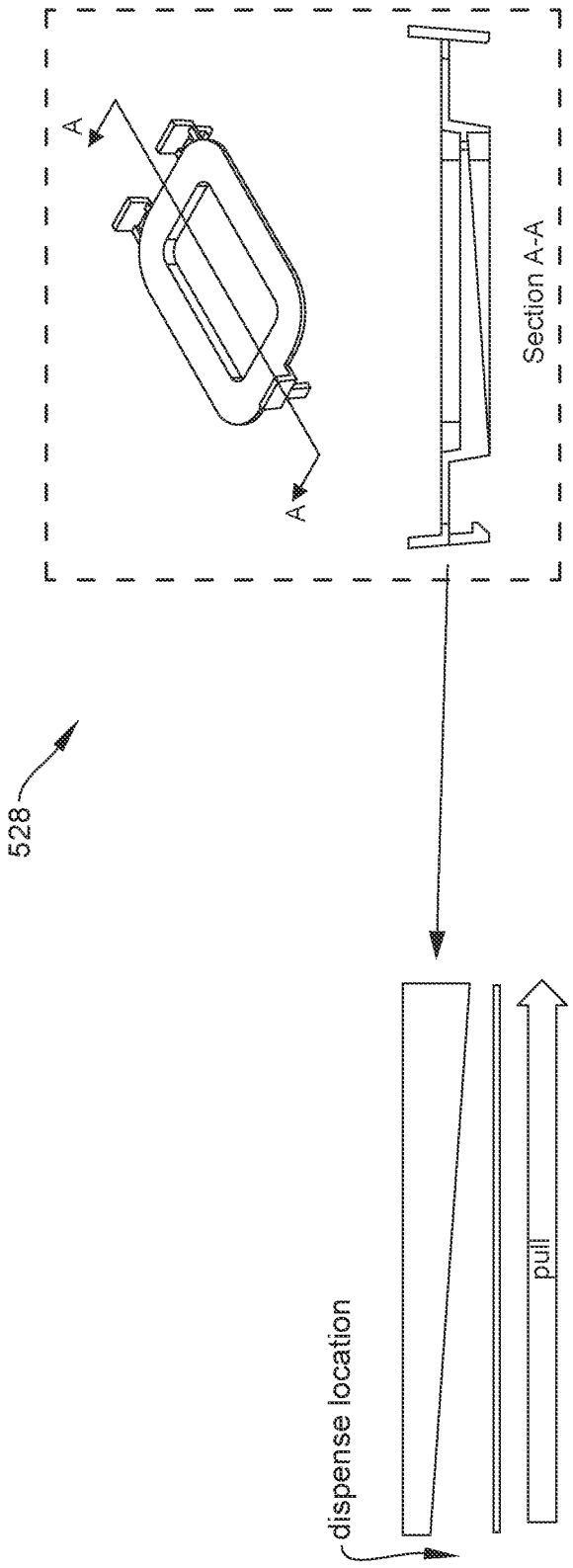

FIG. 4E

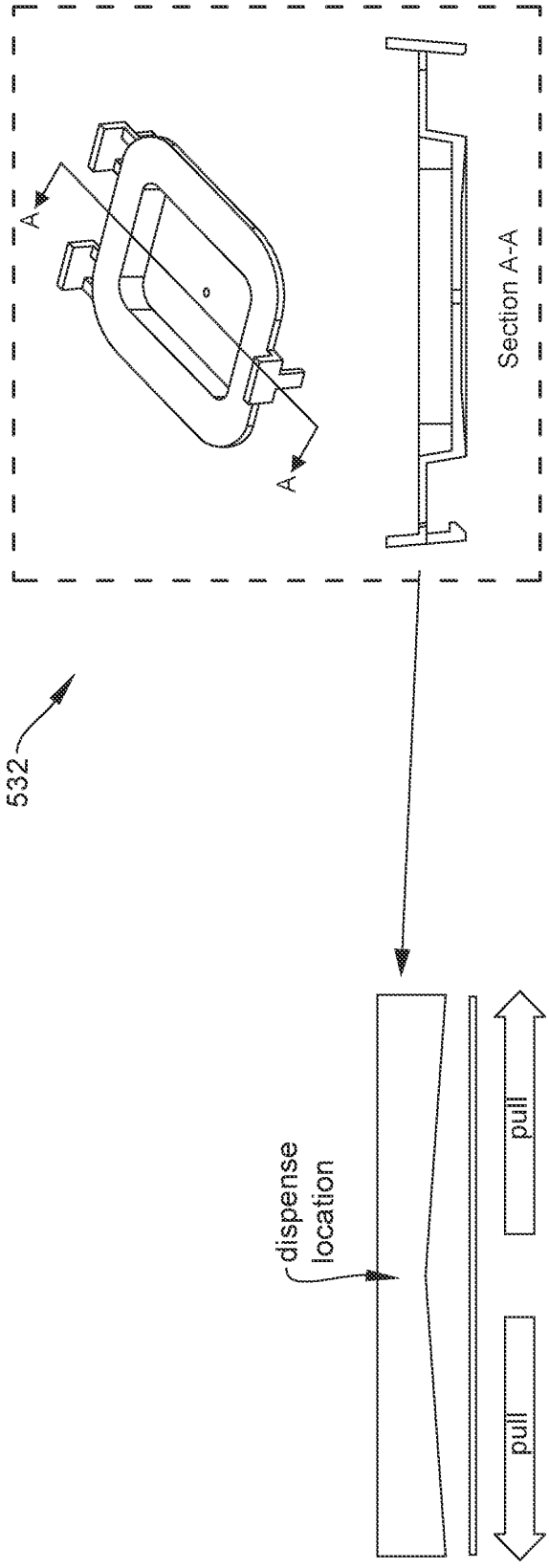

FIG. 4F

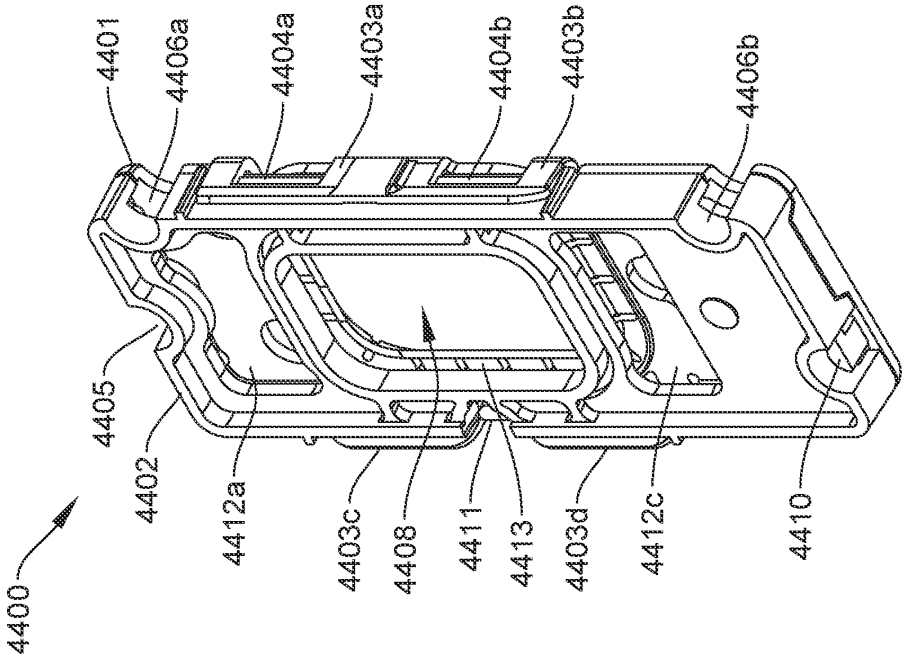
4400
4401
4406a
4404a
4403a
4404b
4403b
4406b
4405
4402
4412a
4403c
4408
4411
4413
4403d
4412c
4410

FIG. 4H

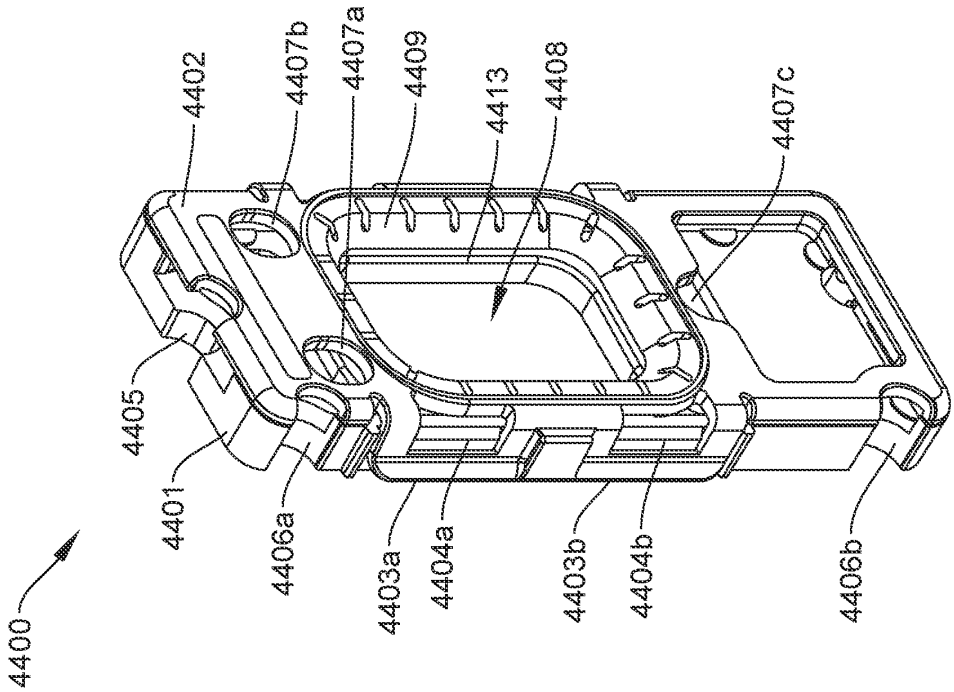
4400
4402
4407b
4407a
4409
4413
4408
4407c
4405
4401
4406a
4403a
4404a
4403b
4404b
4406b

FIG. 4G

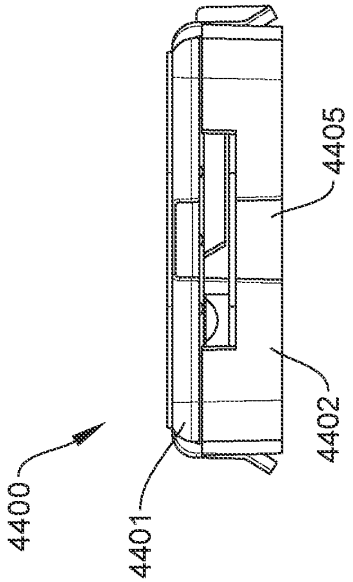

FIG. 4J

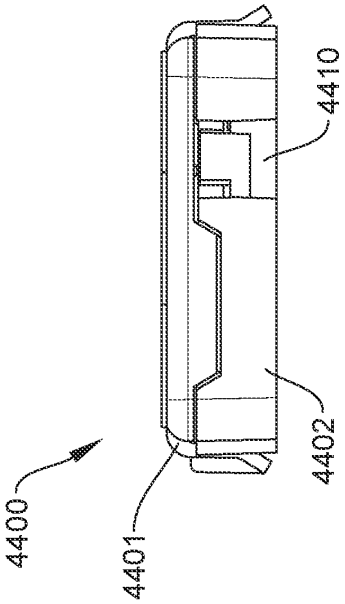

FIG. 4K

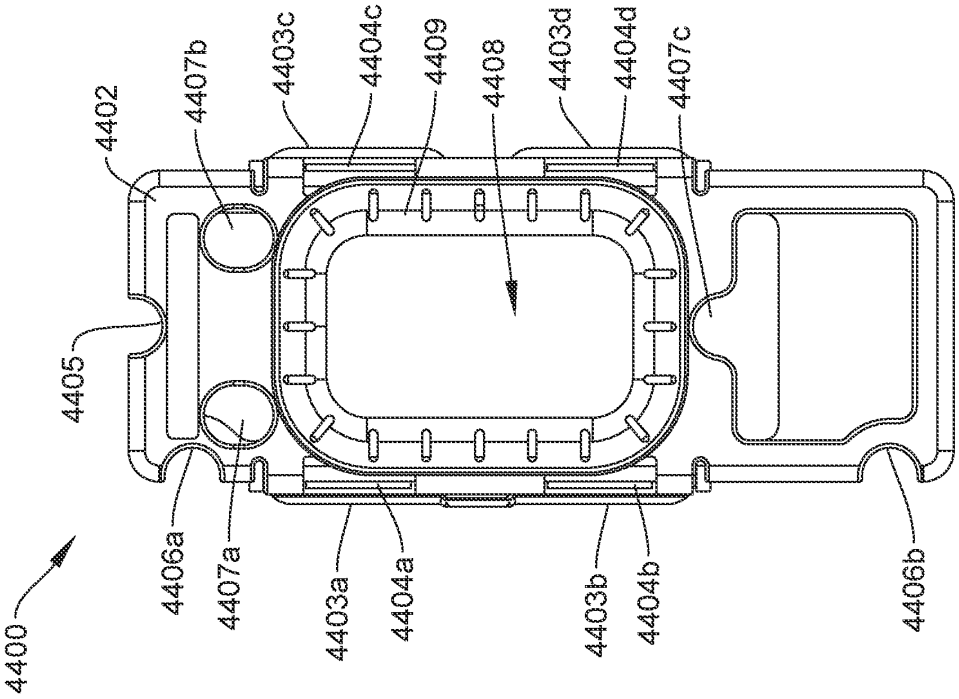

FIG. 4I

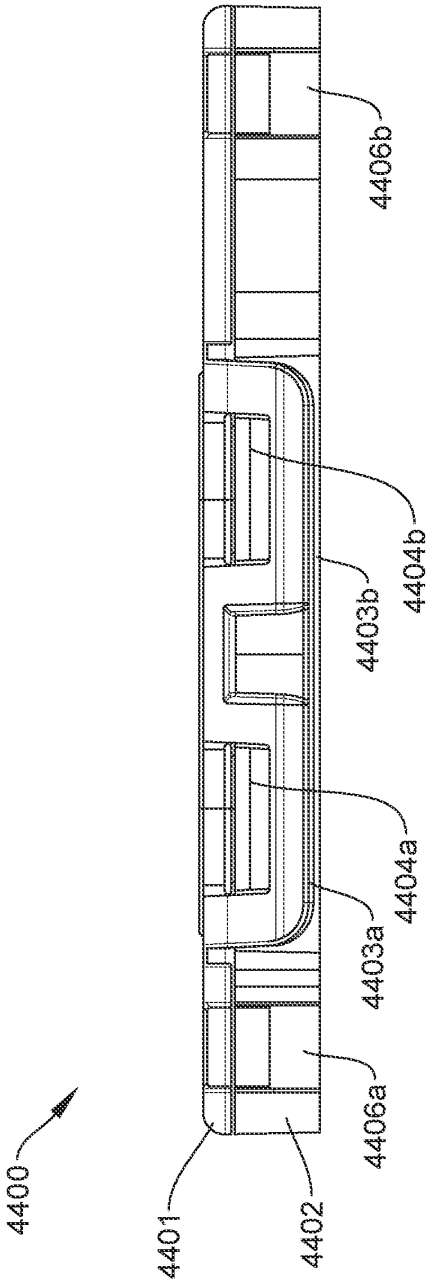
4400
4401
4402
4406a
4403a
4404a
4403b
4404b
4406b

FIG. 4L

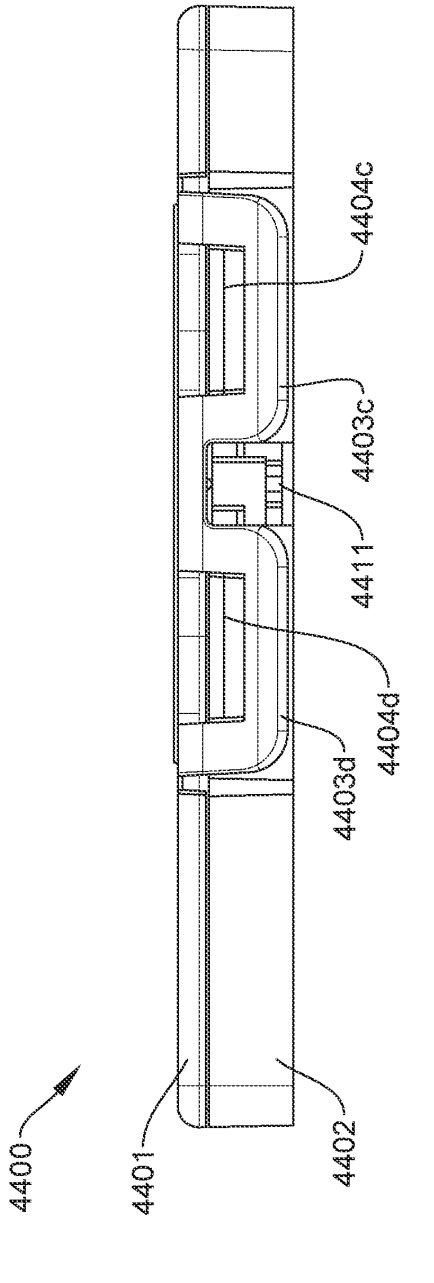
4400
4401
4402
4403d
4404d
4411
4403c
4404c

FIG. 4M

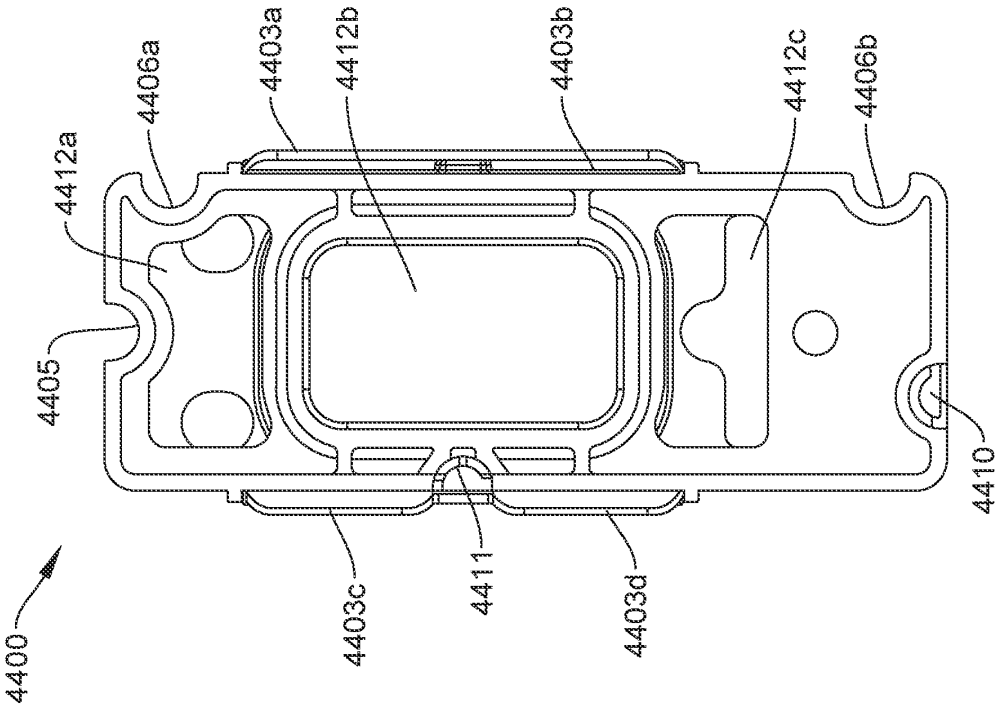
4400
4405
4412a
4406a
4403a
4412b
4403b
4412c
4406b
4410
4403c
4411
4403d

FIG. 4N

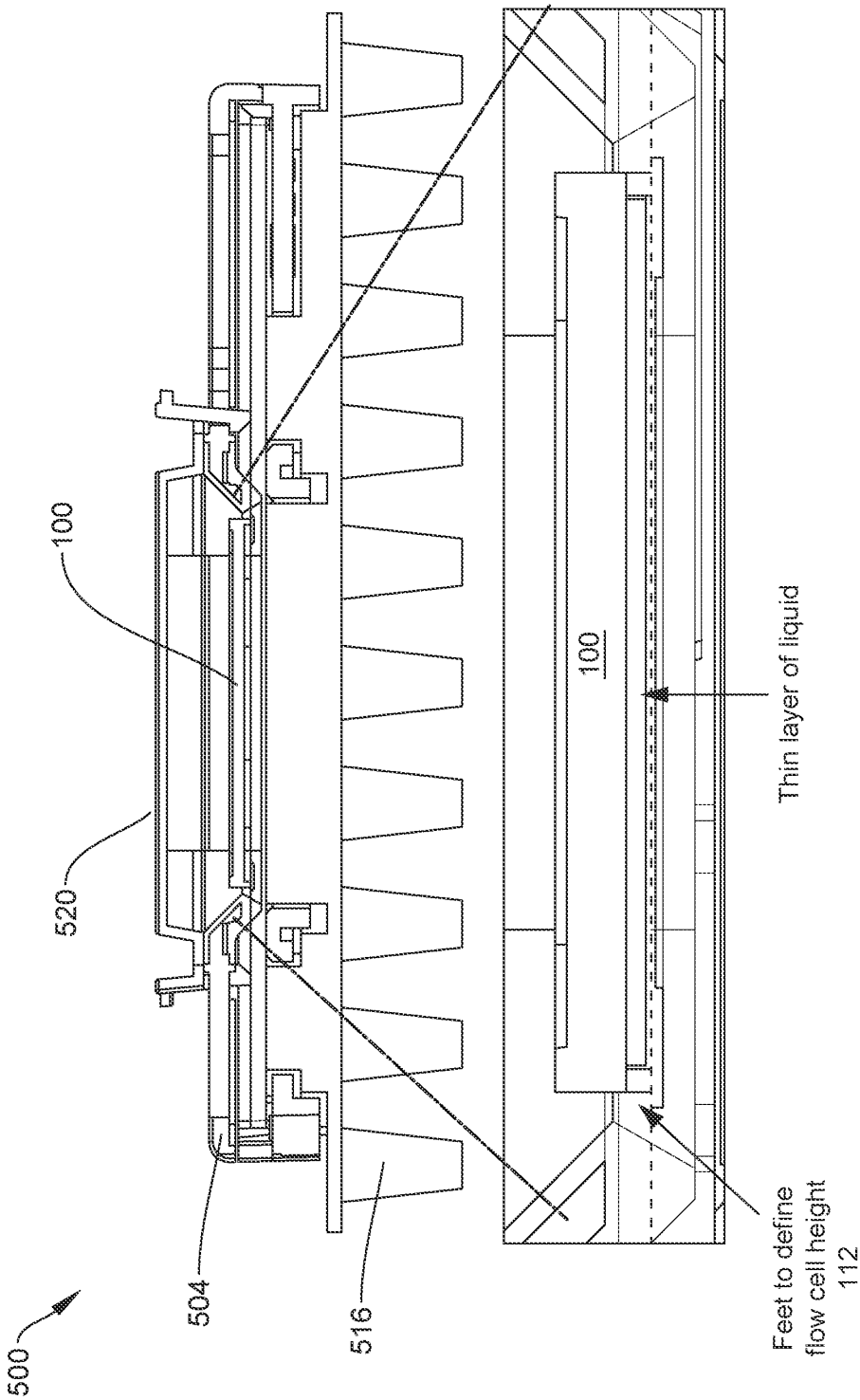
100
520
500
504
516
100
Thin layer of liquid
Feet to define
flow cell height
112

FIG. 5A

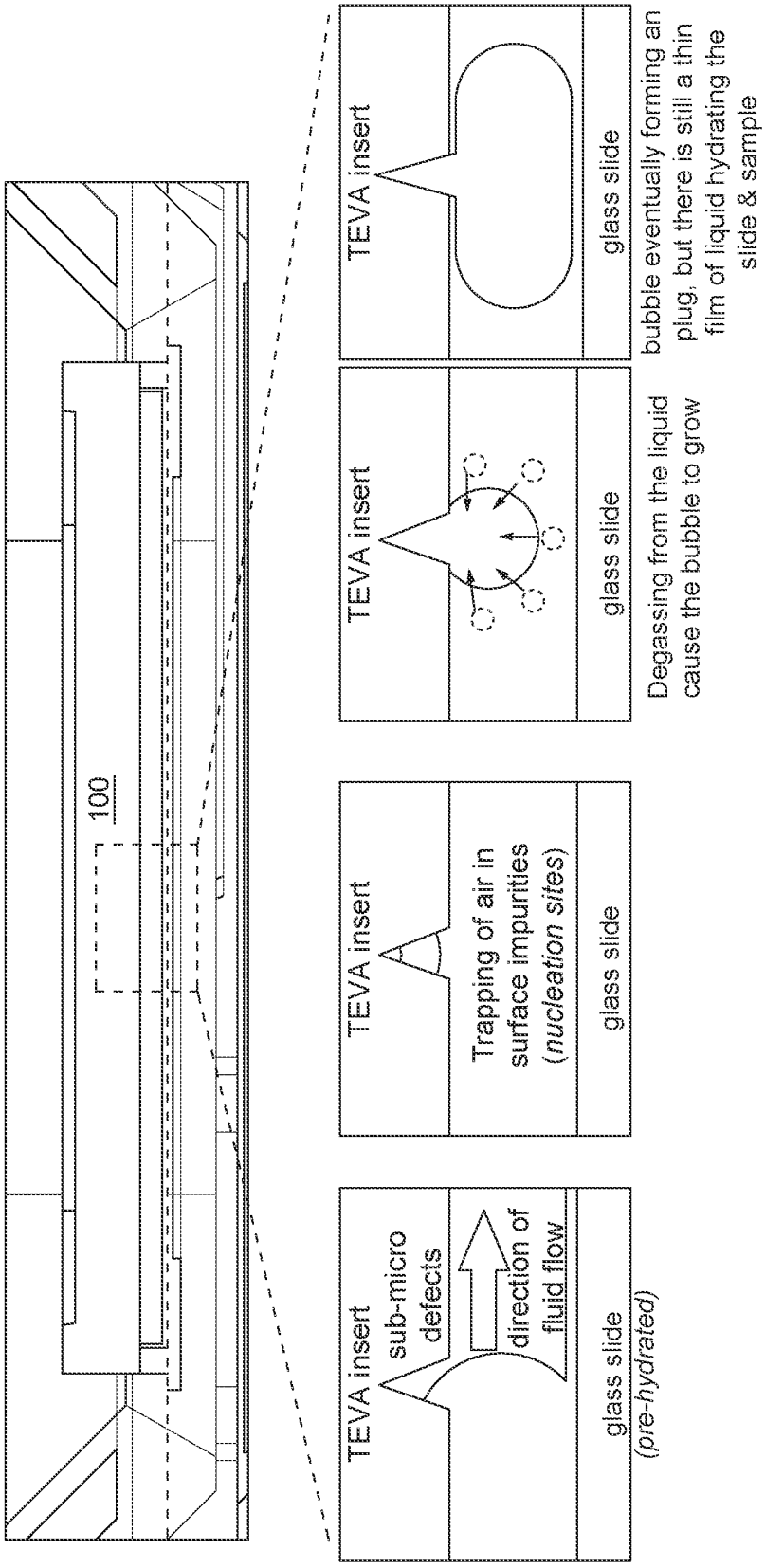
100
TEVA insert
sub-micro defects
direction of fluid flow
glass slide
(pre-hydrated)
TEVA insert
Trapping of air in surface impurities (nucleation sites)
glass slide
TEVA insert
glass slide
Degassing from the liquid cause the bubble to grow
TEVA insert
glass slide
bubble eventually forming an plug, but there is still a thin film of liquid hydrating the slide & sample

FIG. 5B

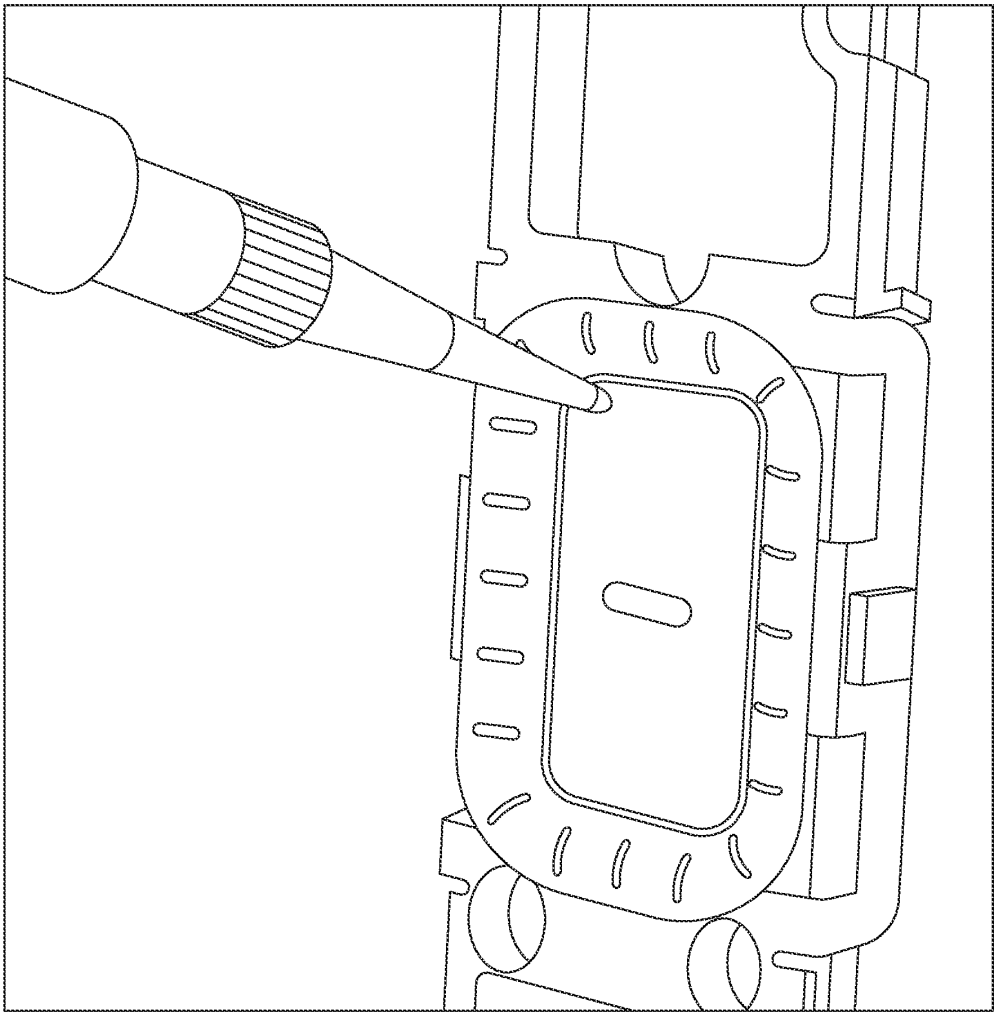

FIG. 6A

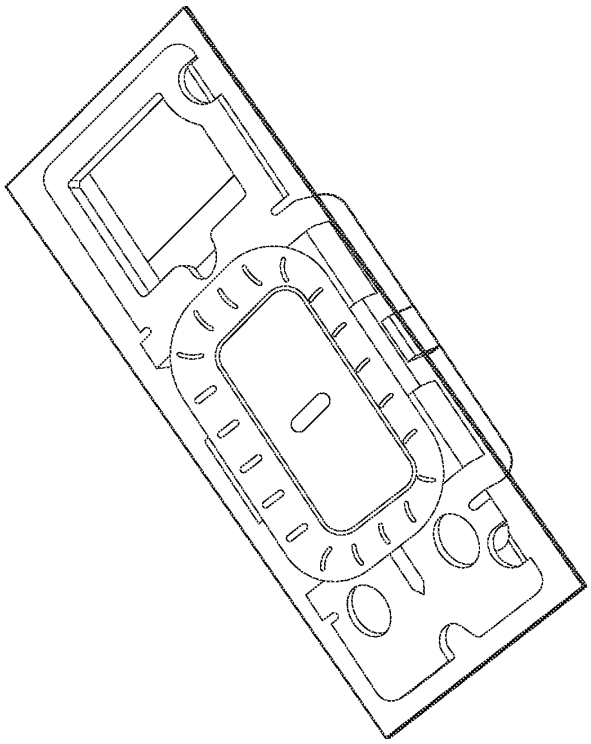

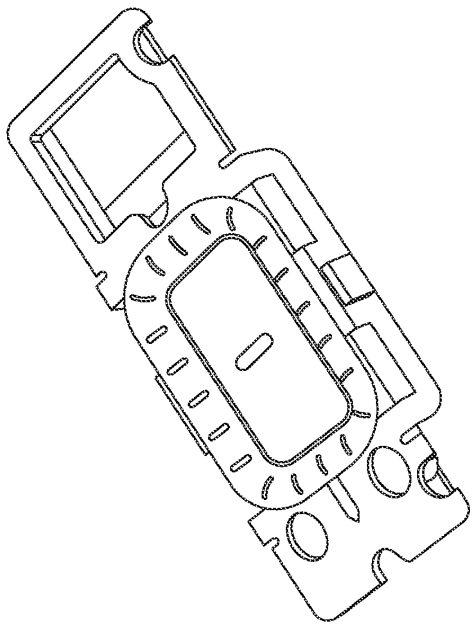

FIG. 6B

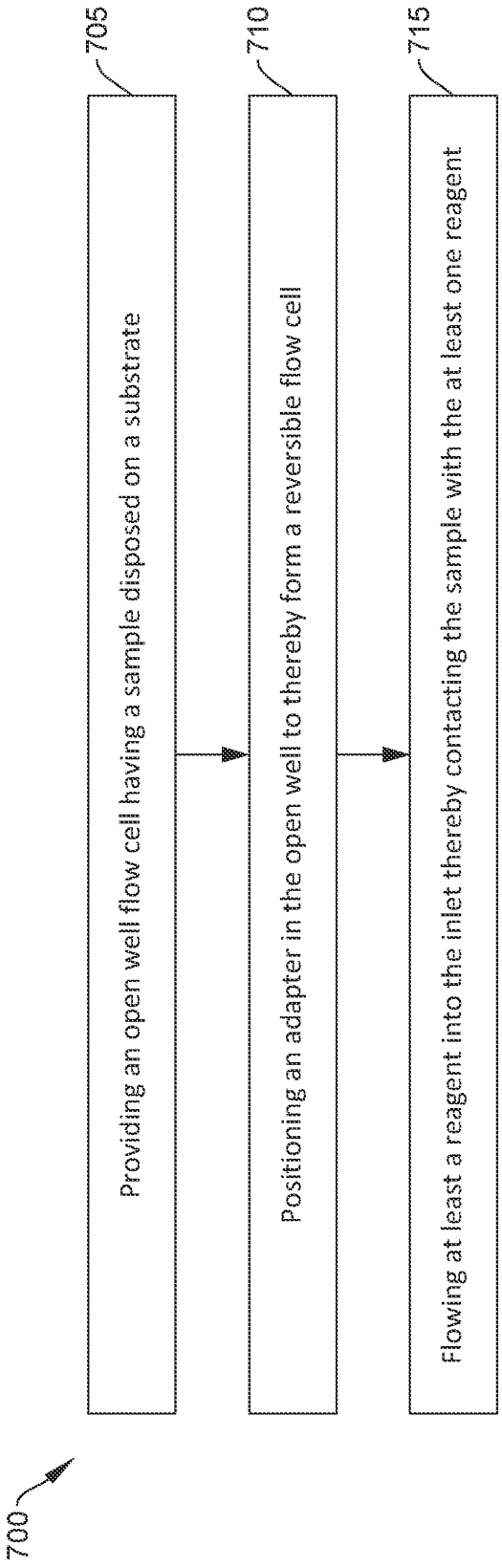
700
705
Providing an open well flow cell having a sample disposed on a substrate
710
Positioning an adapter in the open well to thereby form a reversible flow cell
715
Flowing at least a reagent into the inlet thereby contacting the sample with the at least one reagent

FIG. 7