(12) INTERNATIONAL APPLICATION PUBLISHED UNDER THE PATENT COOPERATION TREATY (PCT)

(19) World Intellectual Property Organization
International Bureau

(43) International Publication Date
18 September 2025 (18.09.2025)

WIPO | PCT

(10) International Publication Number
WO 2025/193655 A1

(51) International Patent Classification:
A47J 31/46 (2006.01) *A47J 31/36* (2006.01)

(21) International Application Number:
PCT/US2025/019299

(22) International Filing Date:
11 March 2025 (11.03.2025)

(25) Filing Language: English

(26) Publication Language: English

(30) Priority Data:
63/564,222 12 March 2024 (12.03.2024) US
63/565,828 15 March 2024 (15.03.2024) US

(71) Applicant: **KEURIG GREEN MOUNTAIN, INC.** [US/US]; 53 South Avenue, Burlington, MA 01803 (US).

(72) Inventors: **GUANYU, Zheng**; 53 South Avenue, Burlington, MA 01803 (US). **MIKKELSEN, Blair**; 53 South Avenue, Burlington, MA 01803 (US). **GREGORY, Janelle, Marie**; 53 South Avenue, Burlington, MA 01803 (US). **RALEIGH, Nicholas, John**; 53 South Avenue, Burlington, MA 01803 (US). **MEEHAN, Jonathan**; 53 South Avenue, Burlington, MA 01803 (US).

(74) Agent: **WANG, Jennifer, J.** et al.; Wolf, Greenfield & Sacks, P.C., 600 Atlantic Avenue, Boston, MA 02210-2206 (US).

(81) Designated States *(unless otherwise indicated, for every kind of national protection available)*: AE, AG, AL, AM, AO, AT, AU, AZ, BA, BB, BG, BH, BN, BR, BW, BY, BZ, CA, CH, CL, CN, CO, CR, CU, CV, CZ, DE, DJ, DK, DM, DO, DZ, EC, EE, EG, ES, FI, GB, GD, GE, GH, GM, GT, HN, HR, HU, ID, IL, IN, IQ, IR, IS, IT, JM, JO, JP, KE, KG, KH, KN, KP, KR, KW, KZ, LA, LC, LK, LR, LS, LU, LY, MA, MD, MG, MK, MN, MU, MW, MX, MY, MZ, NA, NG, NI, NO, NZ, OM, PA, PE, PG, PH, PL, PT, QA, RO, RS, RU, RW, SA, SC, SD, SE, SG, SK, SL, ST, SV, SY, TH, TJ, TM, TN, TR, TT, TZ, UA, UG, US, UY, UZ, VC, VN, WS, ZA, ZM, ZW.

WO 2025/193655 A1

(54) Title: BEVERAGE MACHINE WITH BREW CHAMBER FLUID SYSTEM

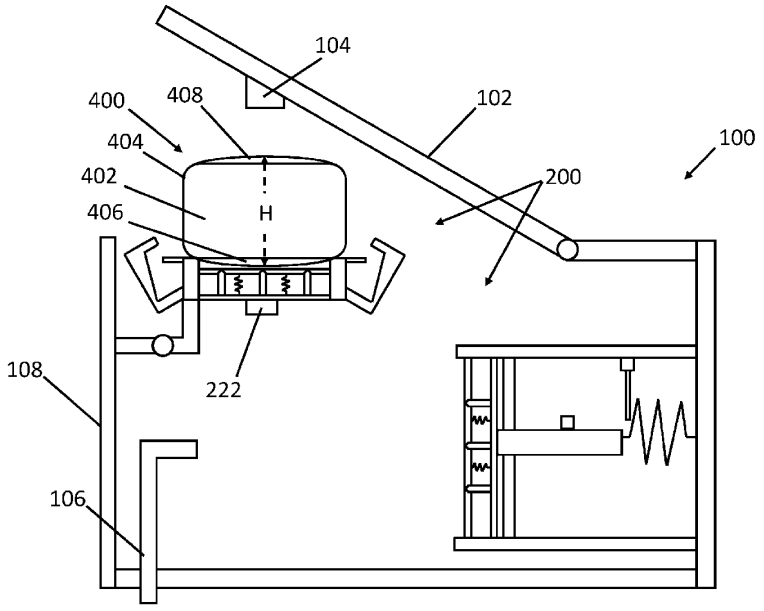

FIG. 1

(57) Abstract: A beverage machine is provided, where the beverage machine may, in some embodiments, be configured to have a brew chamber configured for receiving beverage tablets. The beverage machine may include a brew chamber fluid system configured to deliver liquid to a brew chamber to prewet the beverage tablet. The beverage machine may include a brew chamber fluid system configured to deliver liquid to a hydraulic chamber to compress and deform the beverage tablet. The beverage machine may include a brew chamber fluid system configured to deliver liquid to a plurality of inlet piercing needles to introduce water into the beverage tablet.

[Continued on next page]

(84) **Designated States** *(unless otherwise indicated, for every kind of regional protection available)*: ARIPO (BW, CV, GH, GM, KE, LR, LS, MW, MZ, NA, RW, SC, SD, SL, ST, SZ, TZ, UG, ZM, ZW), Eurasian (AM, AZ, BY, KG, KZ, RU, TJ, TM), European (AL, AT, BE, BG, CH, CY, CZ, DE, DK, EE, ES, FI, FR, GB, GR, HR, HU, IE, IS, IT, LT, LU, LV, MC, ME, MK, MT, NL, NO, PL, PT, RO, RS, SE, SI, SK, SM, TR), OAPI (BF, BJ, CF, CG, CI, CM, GA, GN, GQ, GW, KM, ML, MR, NE, SN, TD, TG).

Published:

— *with international search report (Art. 21(3))*