FIG. 1

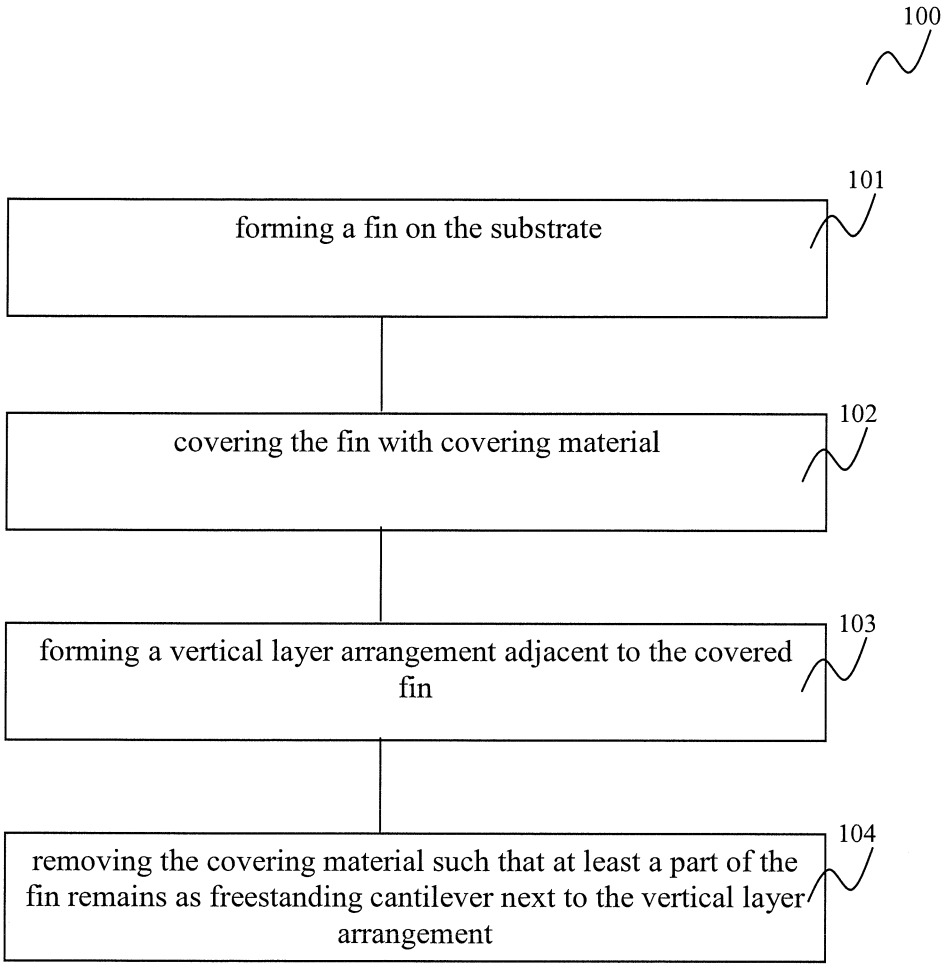
100
101
forming a fin on the substrate
102
covering the fin with covering material
103
forming a vertical layer arrangement adjacent to the covered fin
104
removing the covering material such that at least a part of the fin remains as freestanding cantilever next to the vertical layer arrangement

FIG. 2 (a)

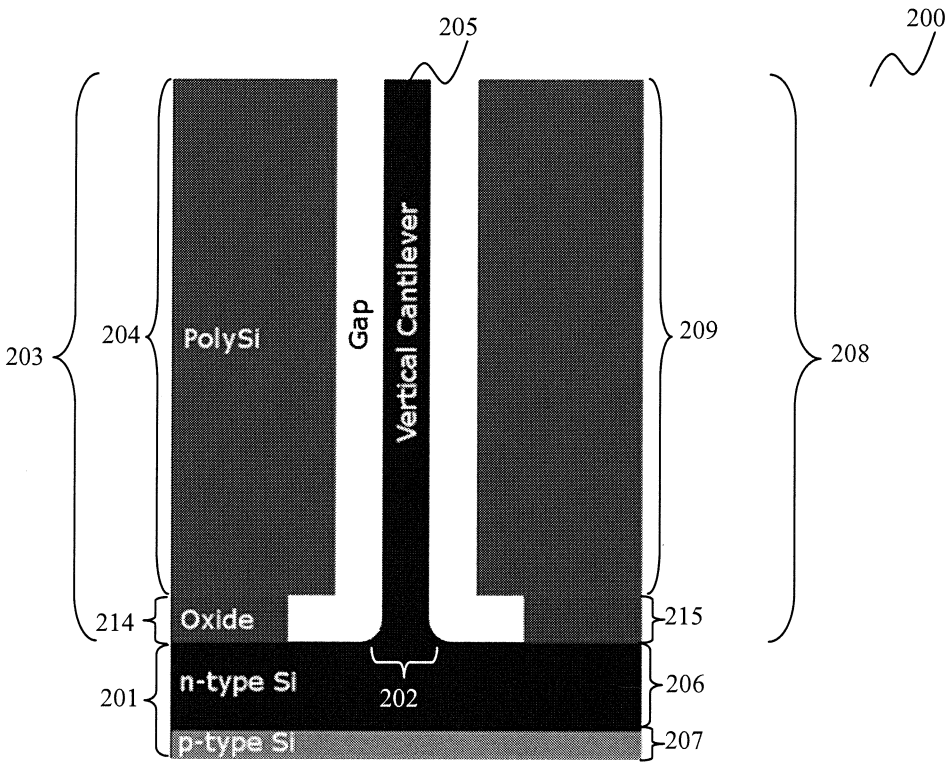
200
205
203
204
PolySi
Gap
Vertical Cantilever
209
208
214
Oxide
215
201
n-type Si
202
206
p-type Si
207

FIG. 2 (b)

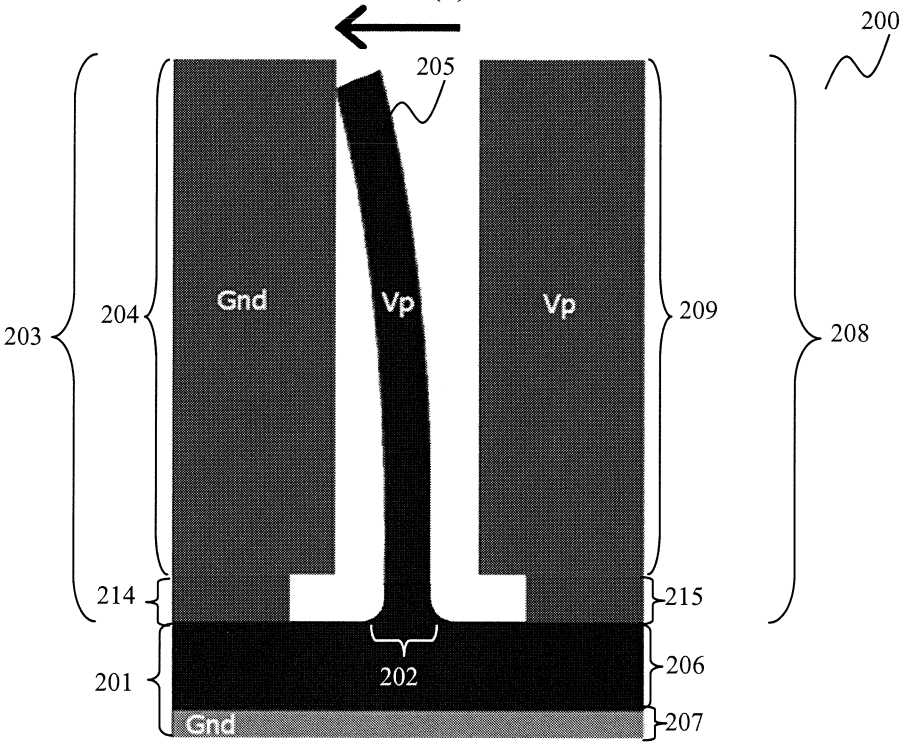
200
205
203
204
Gnd
Vp
Vp
209
208
214
215
201
202
206
Gnd
207

FIG. 2 (c)

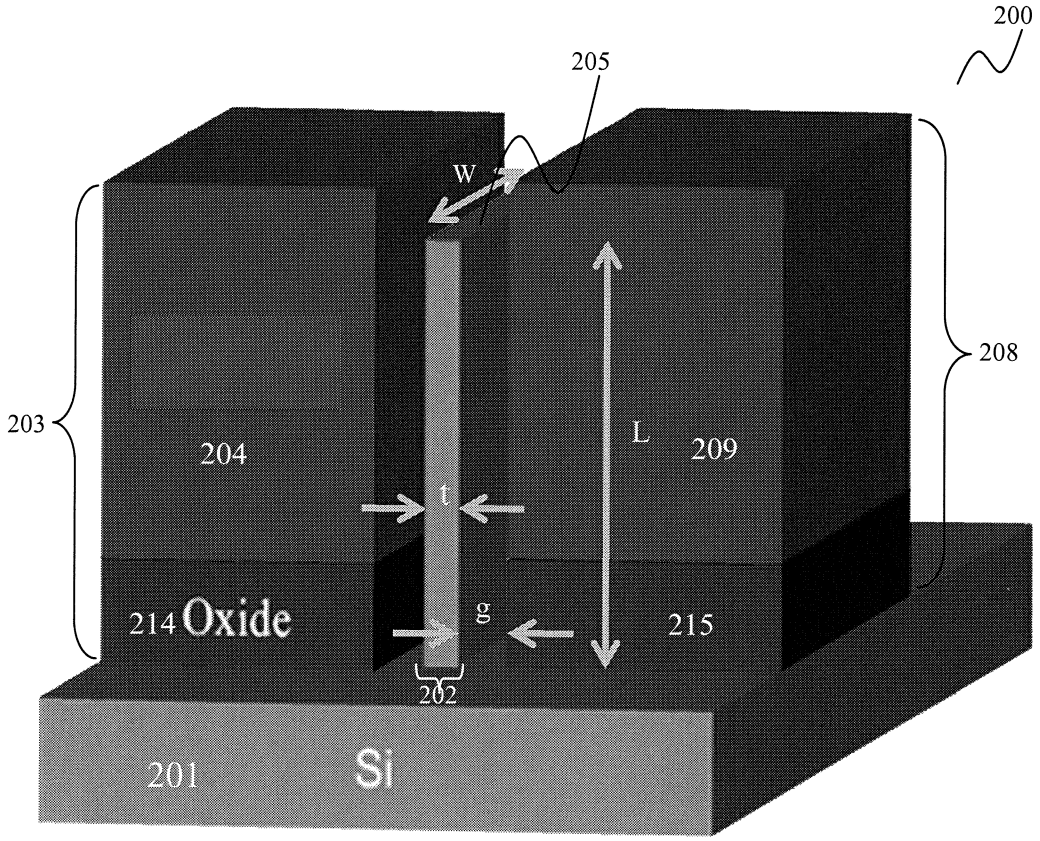
200
205
W
203
204
t
L
209
208
214 Oxide
g
215
202
201
Si

FIG. 2 (d)

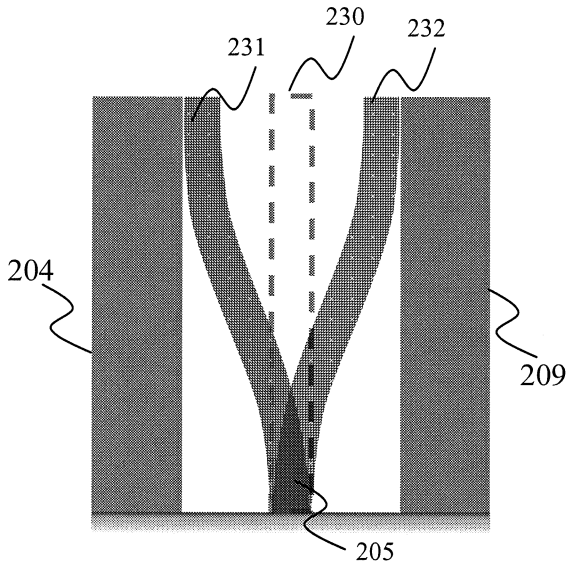
230
231
232
204
209
205

FIG. 3 (a)

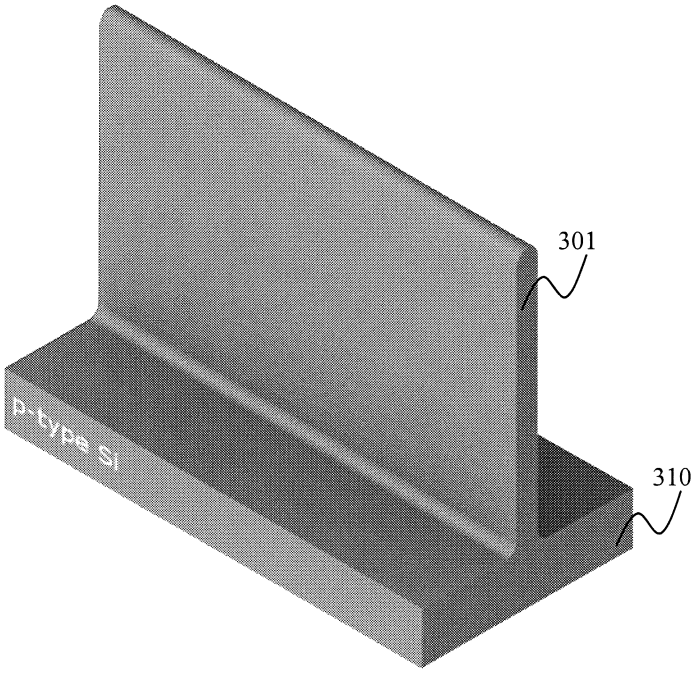

FIG. 3 (b)

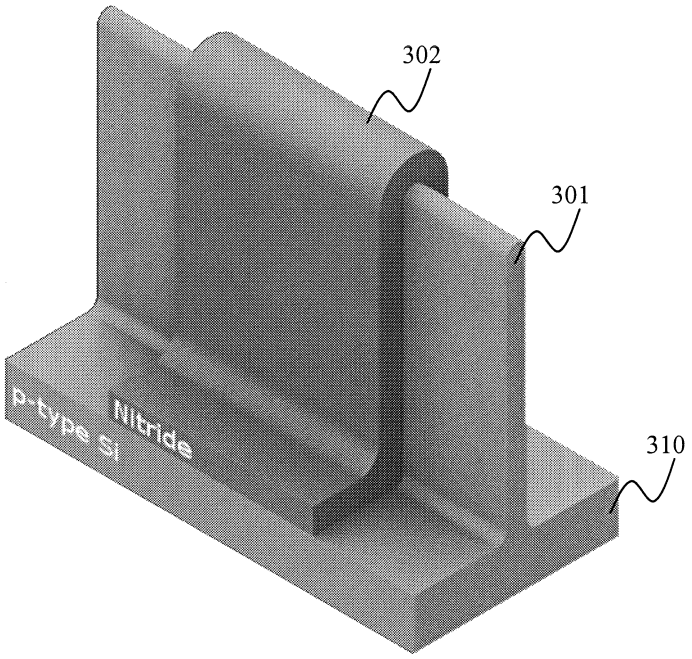

FIG. 3 (c)

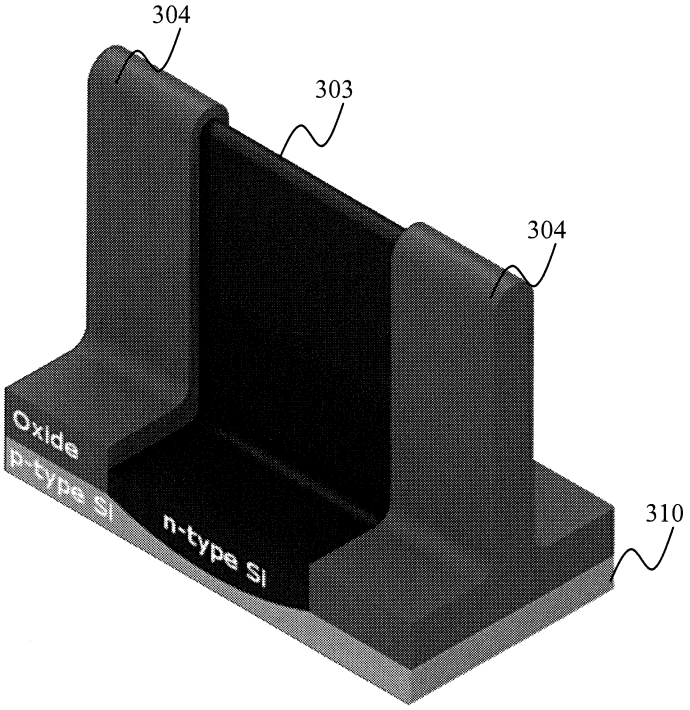
304
303
304
Oxide
p-type Si
n-type Si
310

FIG. 3 (d)

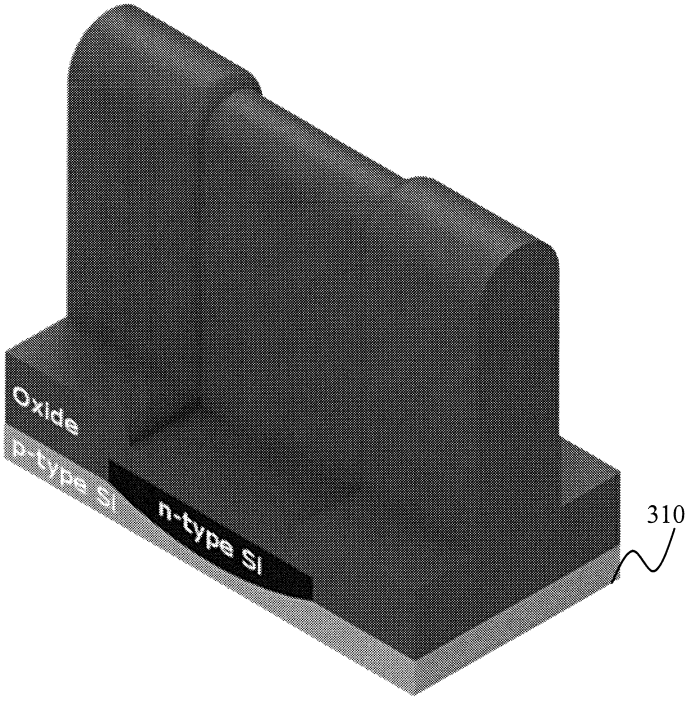
Oxide
p-type Si
n-type Si
310

FIG. 3 (e)

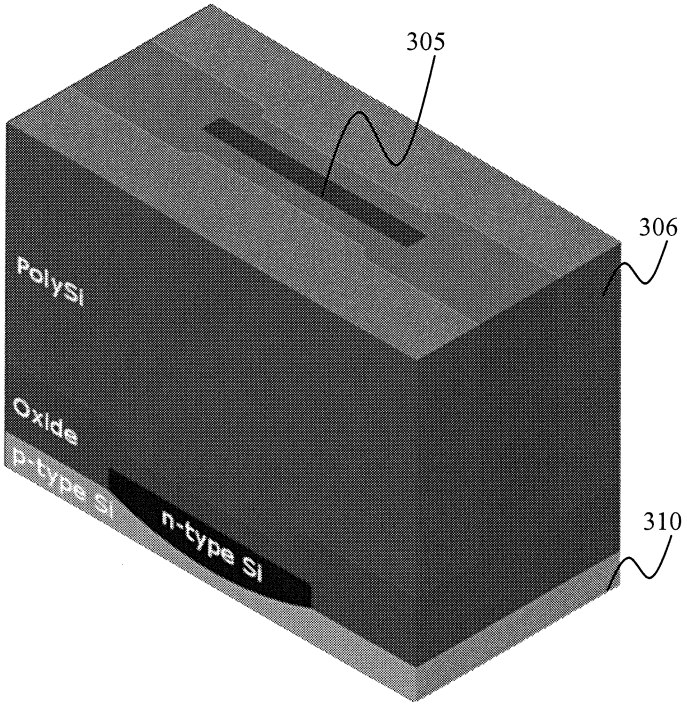
305
306
PolySi
Oxide
p-type Si
n-type Si
310

FIG. 3 (f)

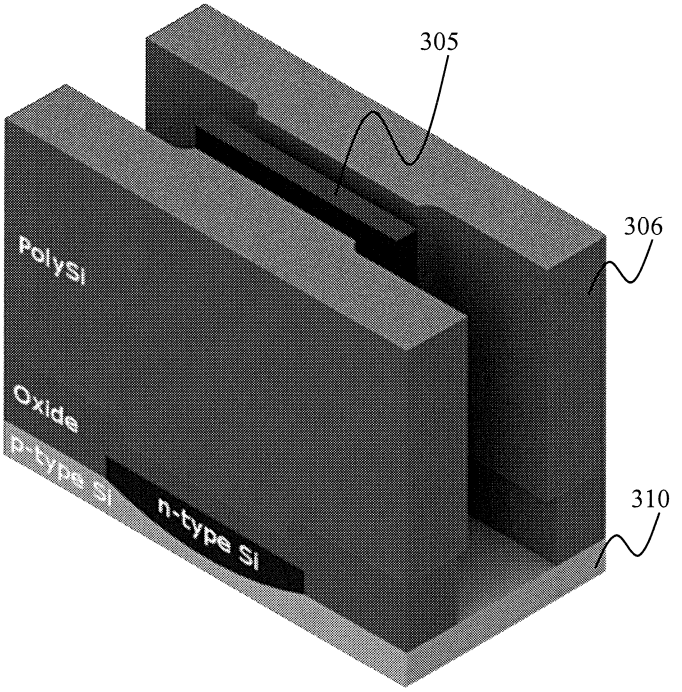
305
306
PolySi
Oxide
p-type Si
n-type Si
310

FIG. 4

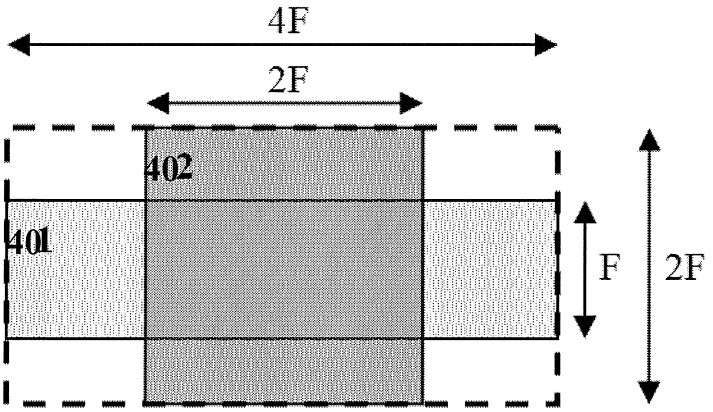
4F
2F
402
401
F
2F

FIG. 5

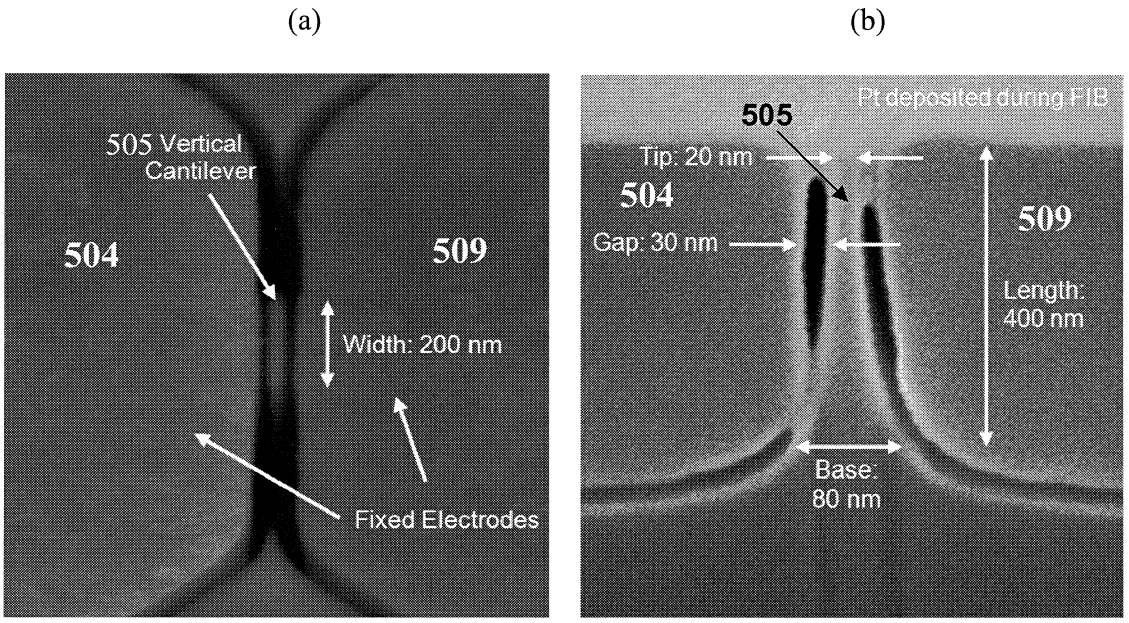
(a)
(b)
505 Vertical Cantilever
504
509
Width: 200 nm
Fixed Electrodes
Pt deposited during FIB
505
Tip: 20 nm
504
509
Gap: 30 nm
Length: 400 nm
Base: 80 nm

FIG. 6

(a) (b)

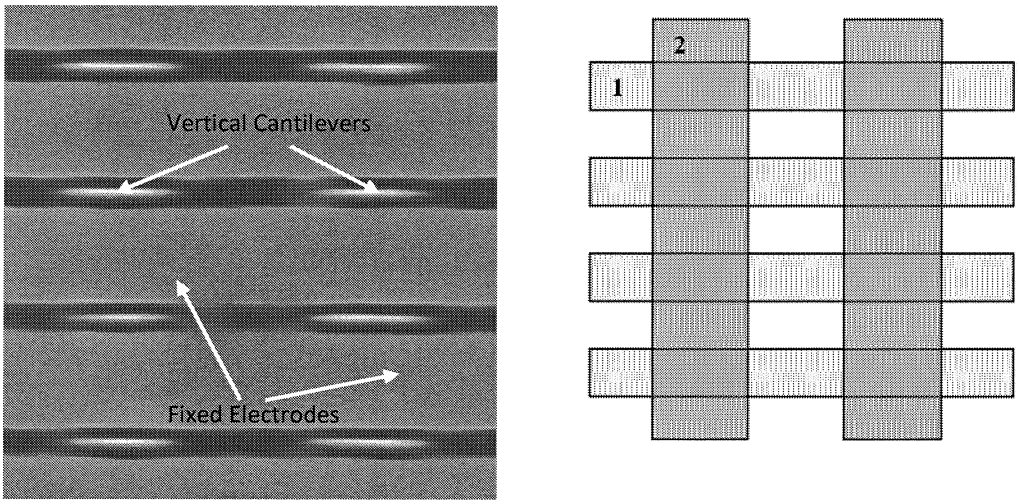
Vertical Cantilevers
Fixed Electrodes
2
1

FIG. 7

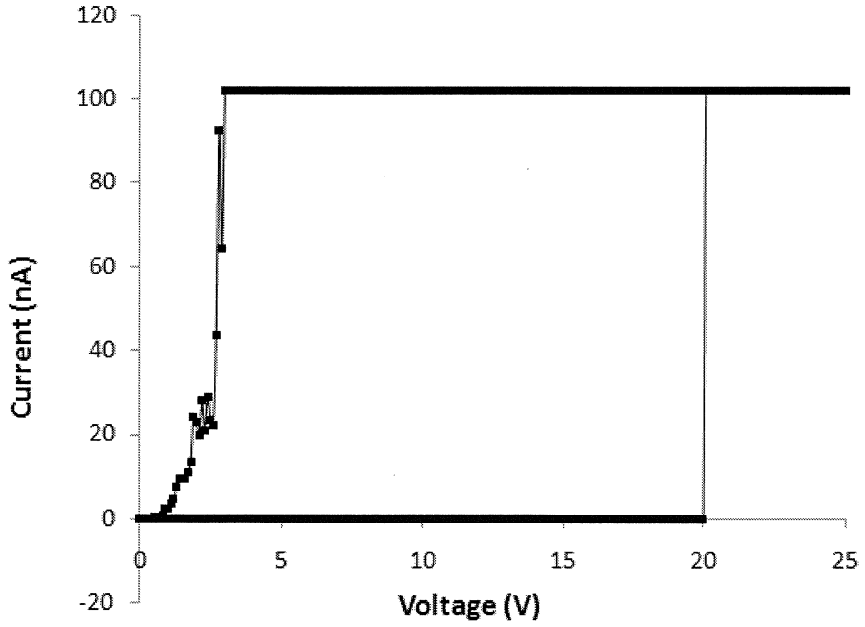
120
100
80
60
40
20
0
-20
0
5
10
15
20
25
Current (nA)
Voltage (V)

FIG. 8

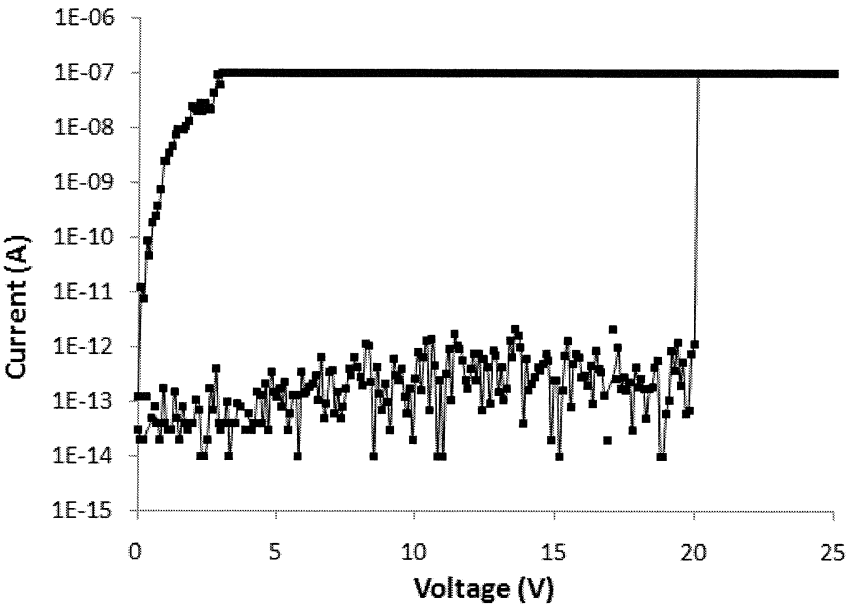
1E-06
1E-07
1E-08
1E-09
1E-10
1E-11
1E-12
1E-13
1E-14
1E-15
Current (A)
0
5
10
15
20
25
Voltage (V)

FIG. 9 (a)

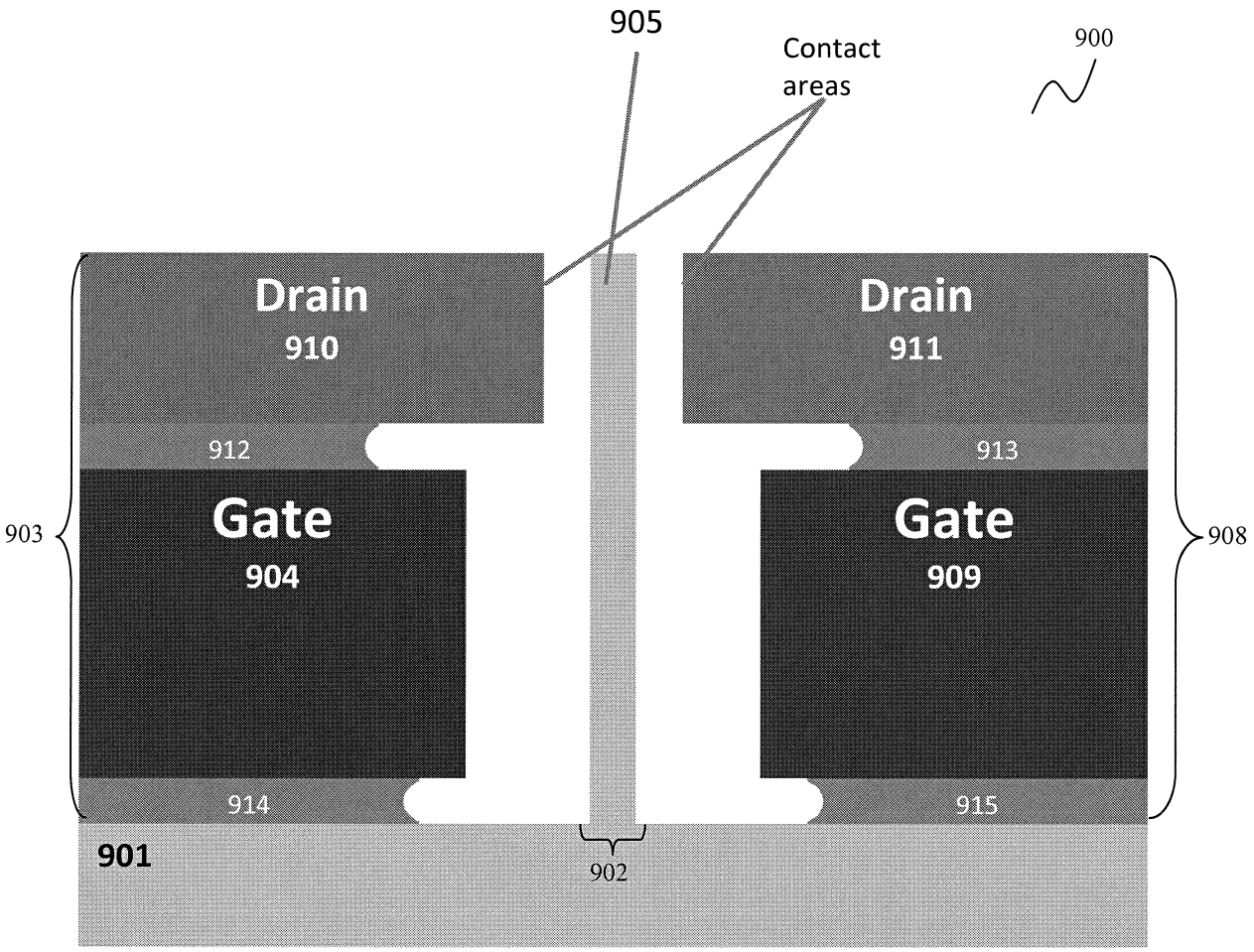
905
Contact areas
900
Drain
910
Drain
911
912
913
Gate
904
Gate
909
903
908
914
915
901
902

FIG. 9 (b)

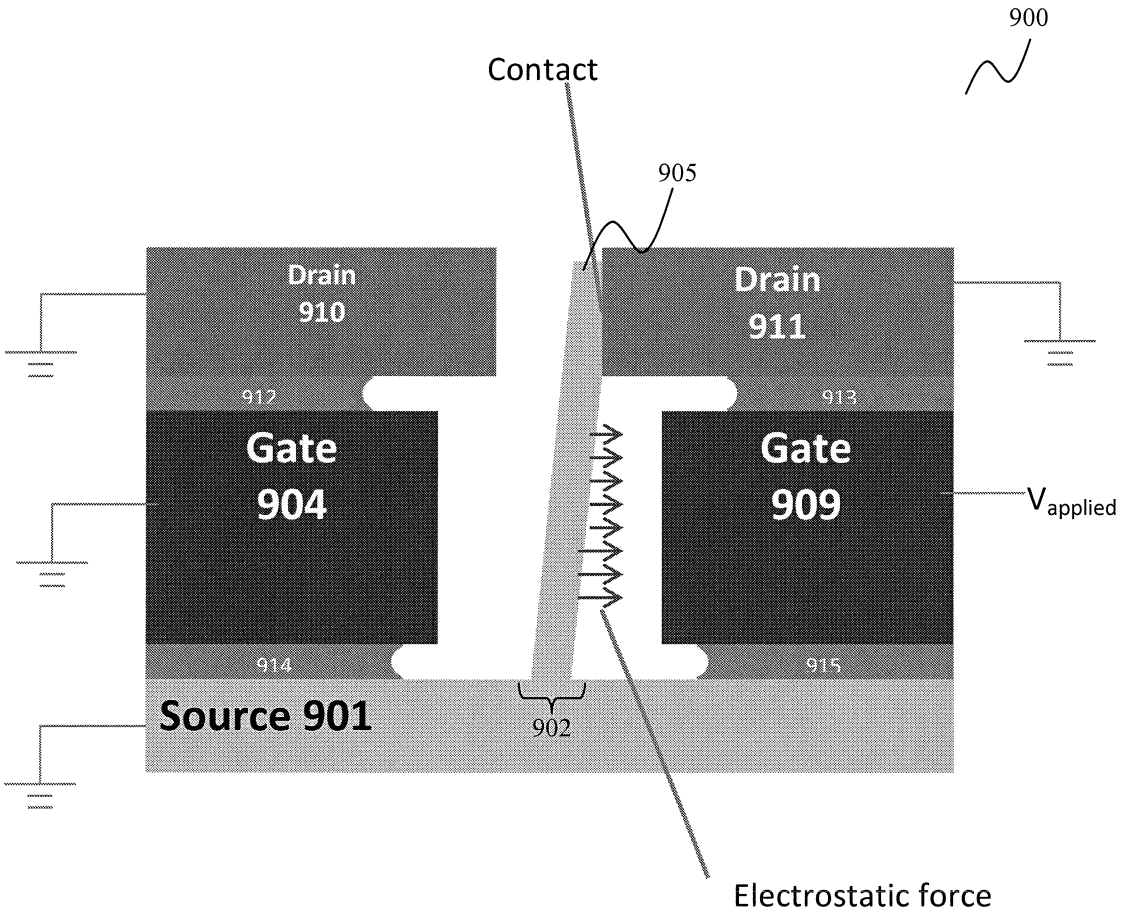
900
Contact
905
Drain
910
Drain
911
912
913
Gate
904
Gate
909
$V_{applied}$
914
915
Source 901
902
Electrostatic force

FIG. 9 (c)

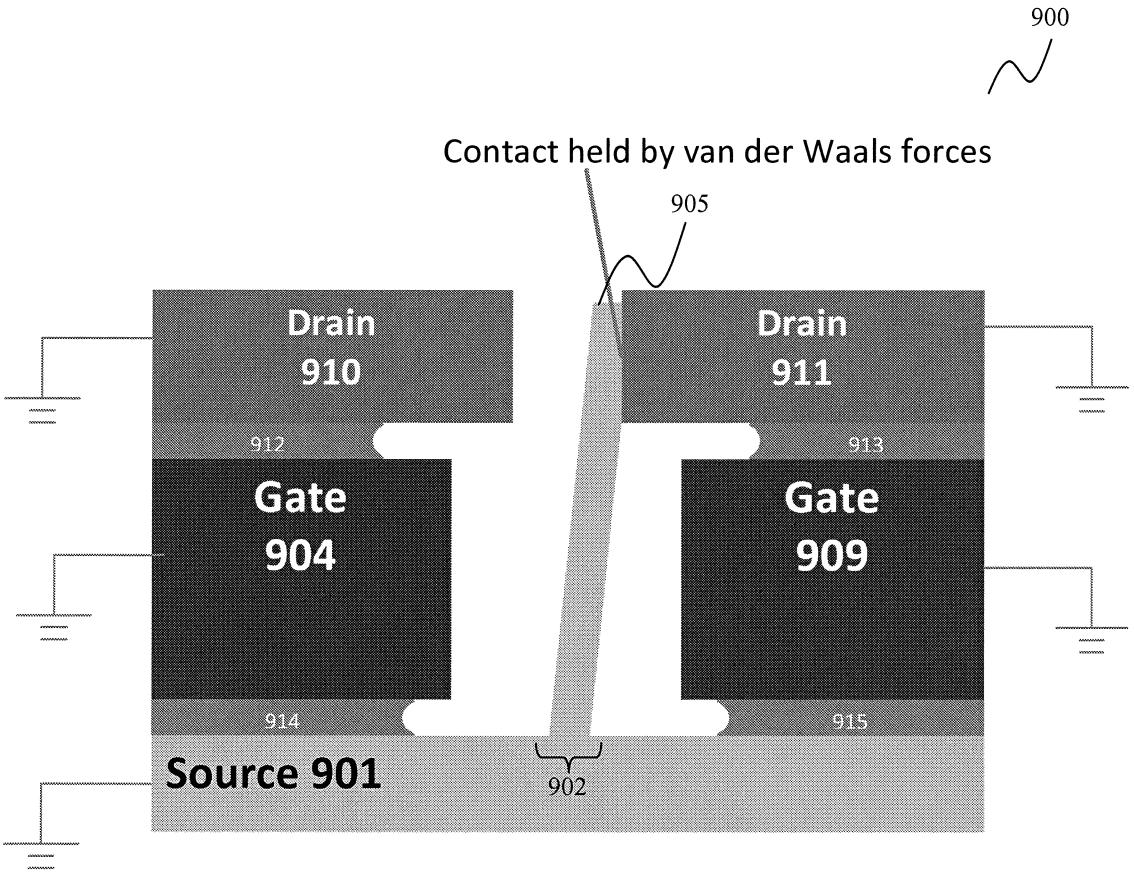
900
Contact held by van der Waals forces
905
Drain
910
Drain
911
912
913
Gate
904
Gate
909
914
915
Source 901
902

FIG. 10 (a)

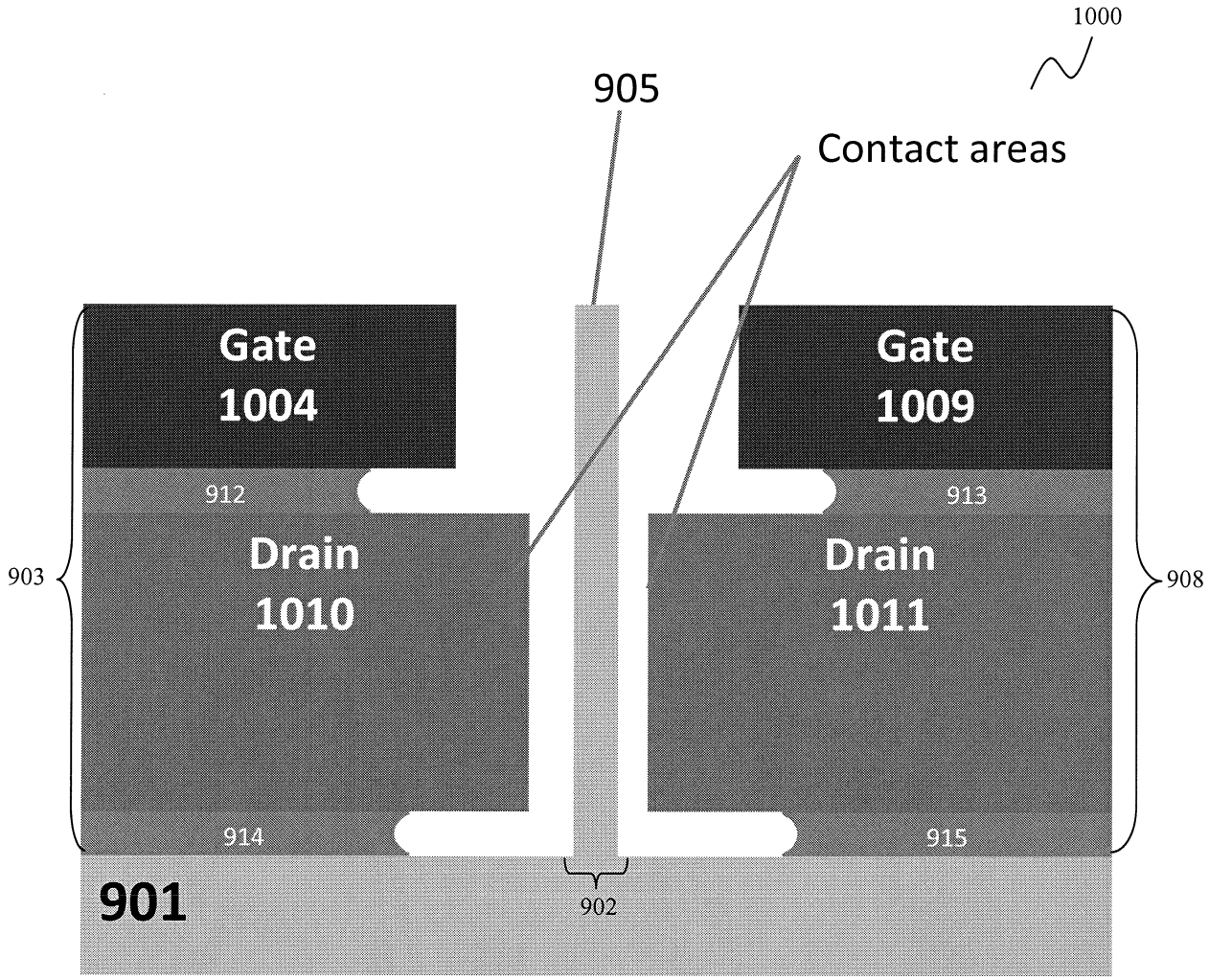
1000
905
Contact areas
Gate
1004
Gate
1009
912
913
Drain
1010
Drain
1011
903
908
914
915
901
902

FIG. 10 (b)

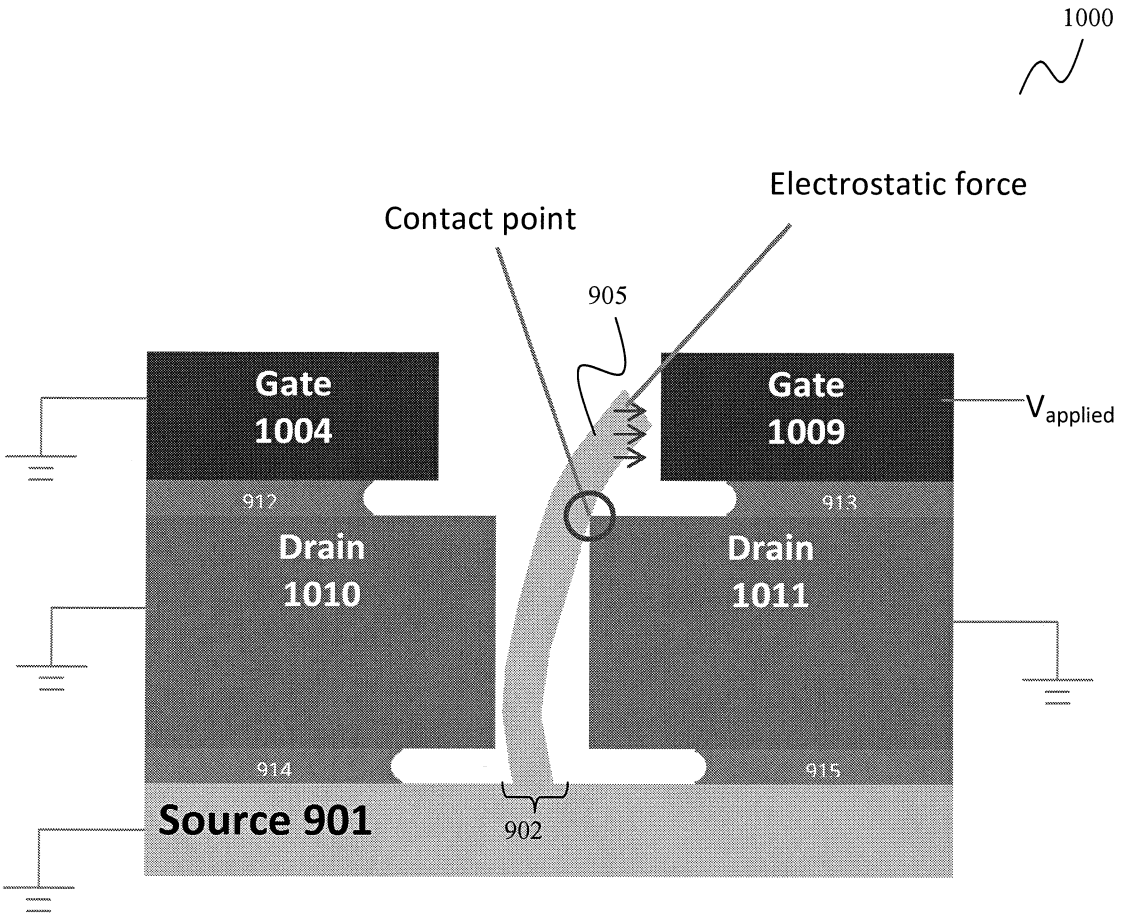
1000
Electrostatic force
Contact point
905
Gate
1004
Gate
1009
$V_{applied}$
912
913
Drain
1010
Drain
1011
914
915
Source 901
902

FIG. 11 (a)

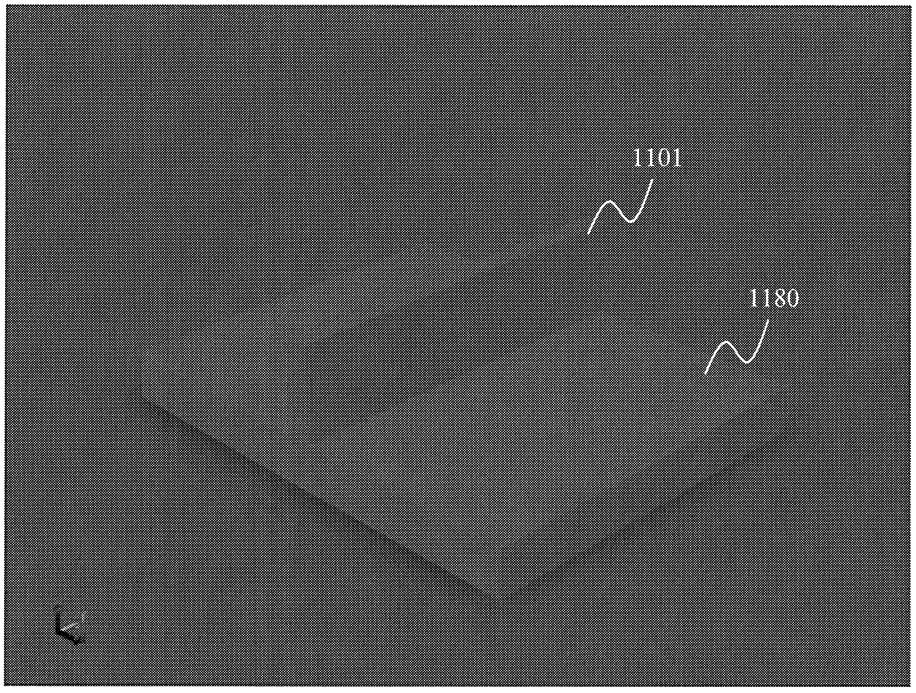

FIG. 11 (b)

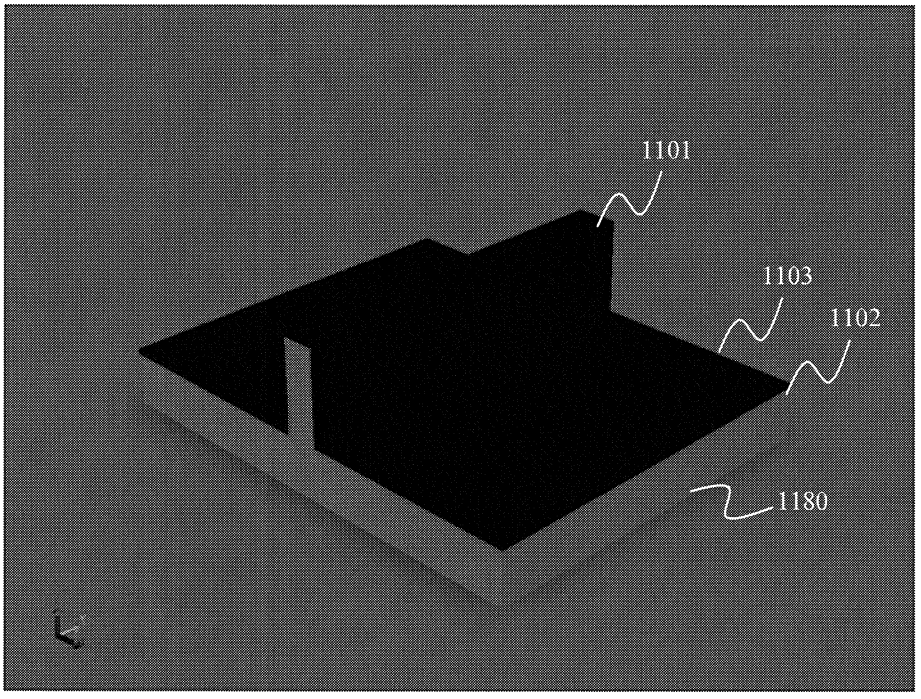

FIG. 11 (c)

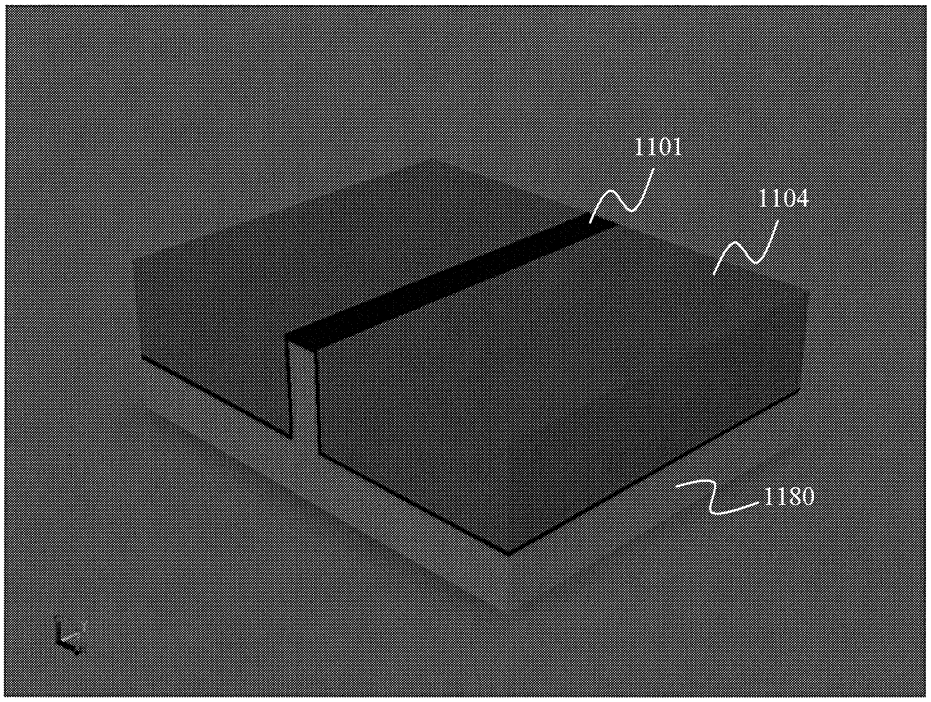

FIG. 11 (d)

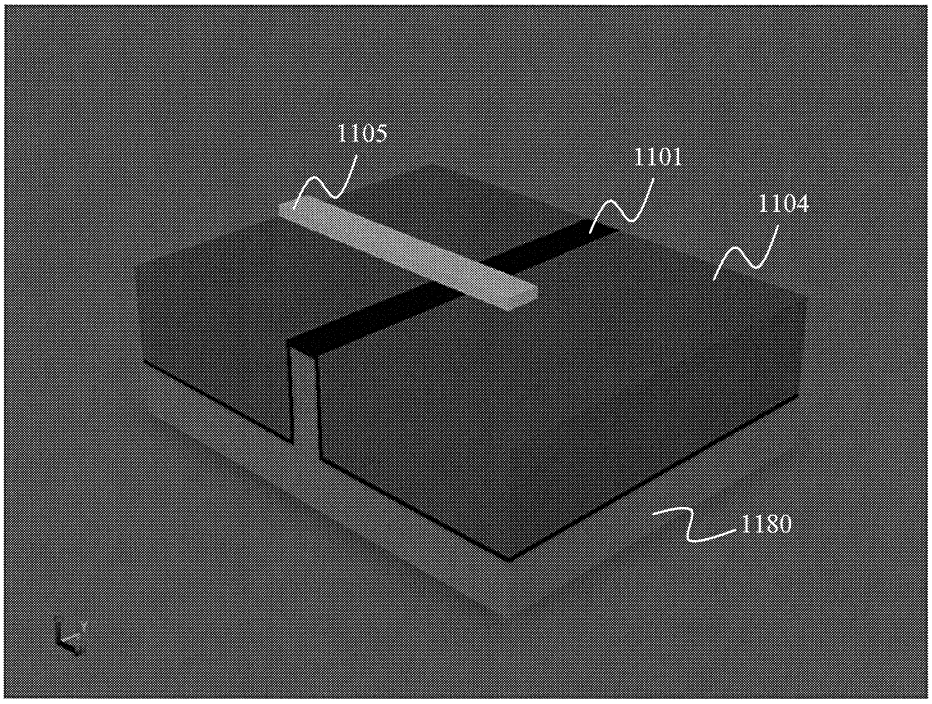

FIG. 11 (e)

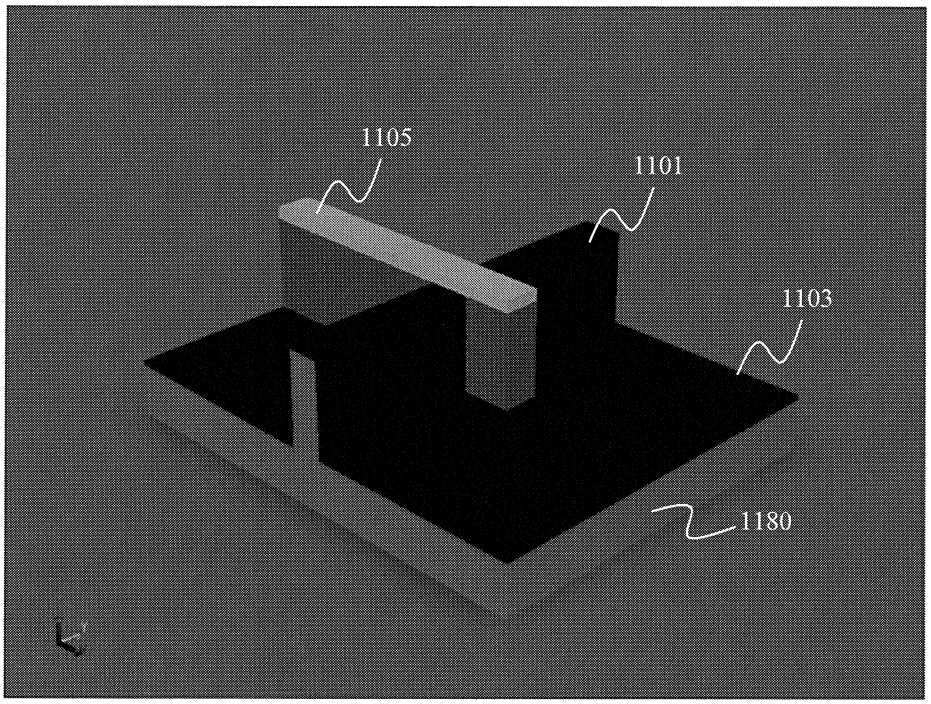

FIG. 11 (f)

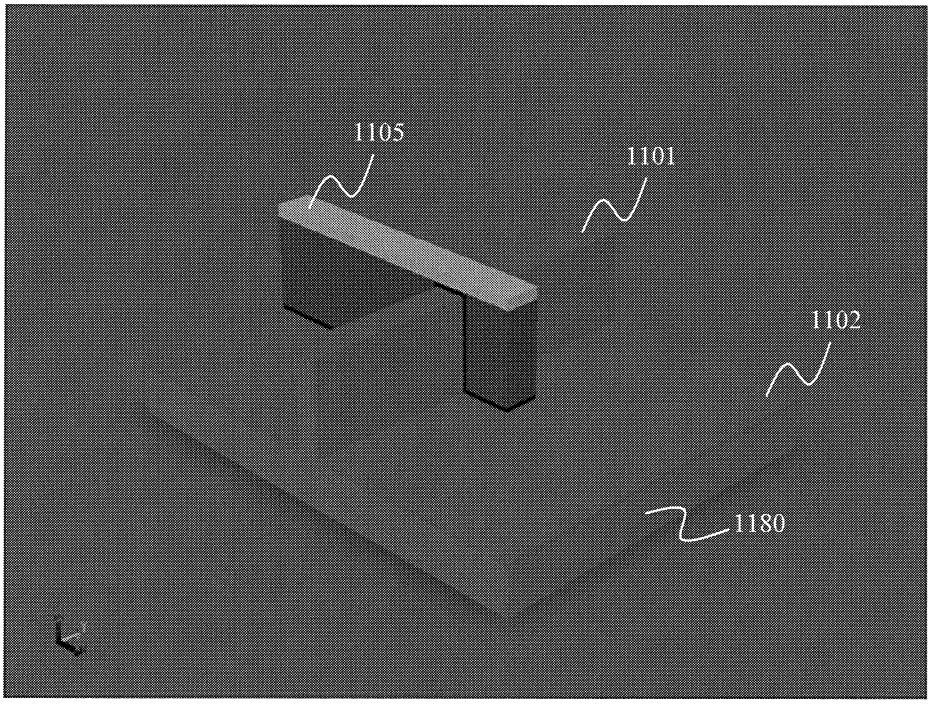

FIG. 11 (g)

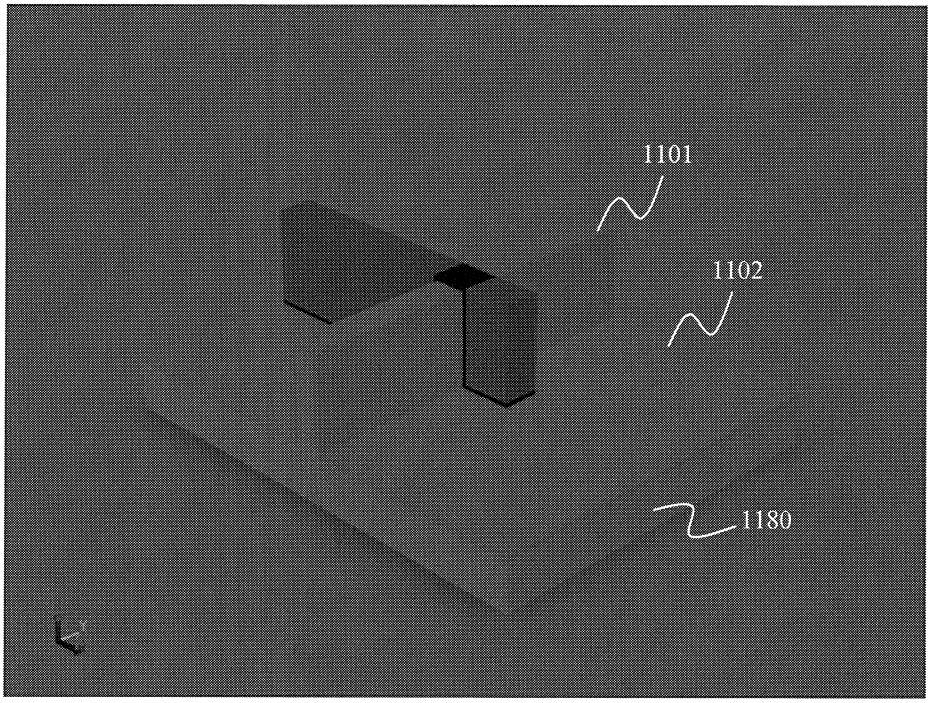

FIG. 11 (h)

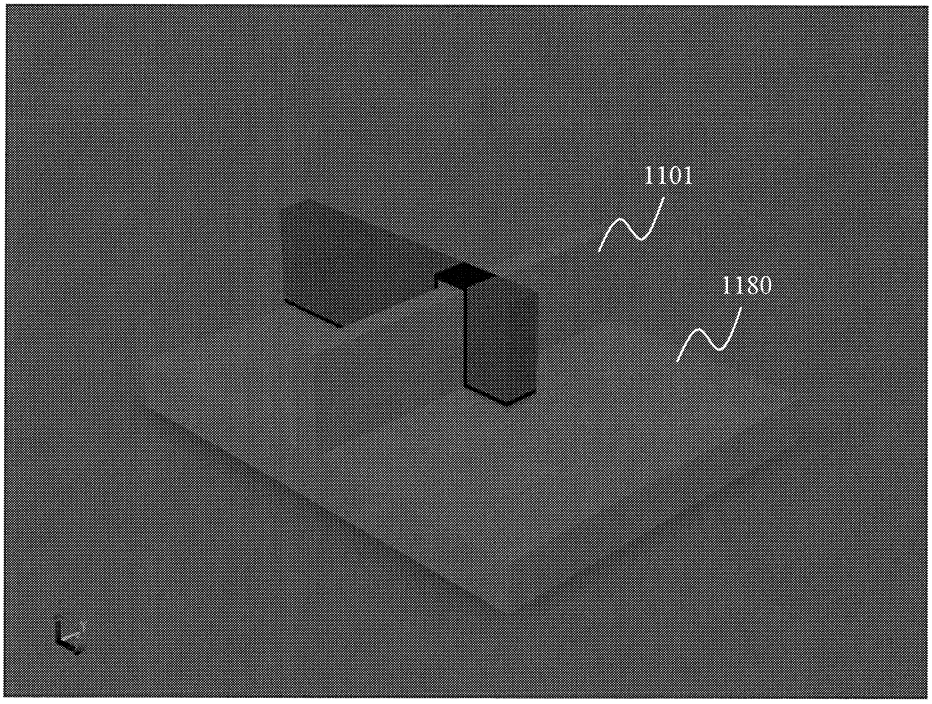

FIG. 11 (i)

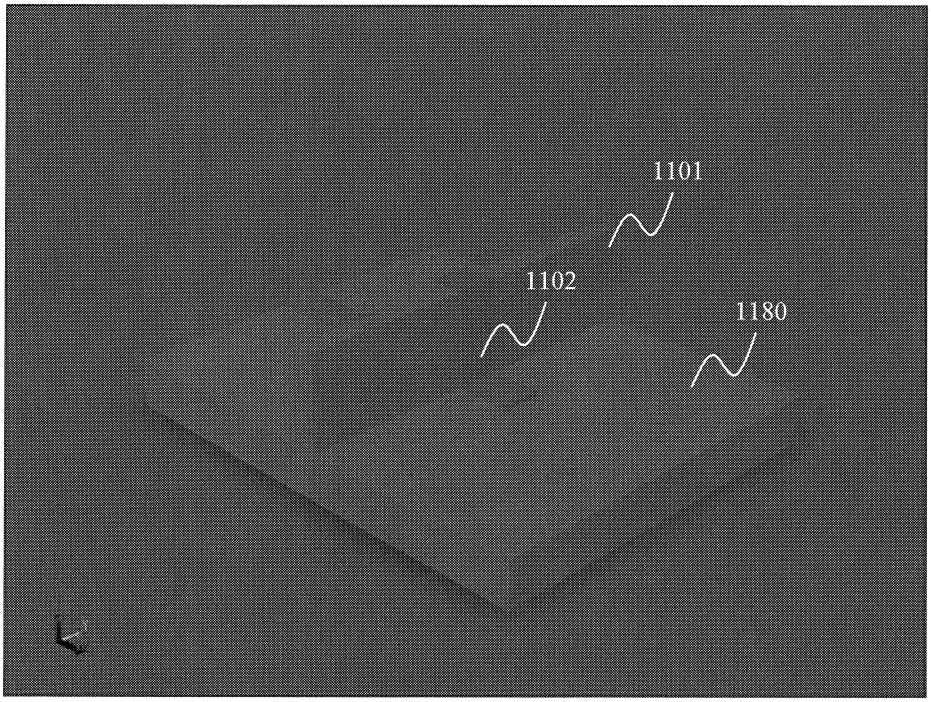

FIG. 11 (j)

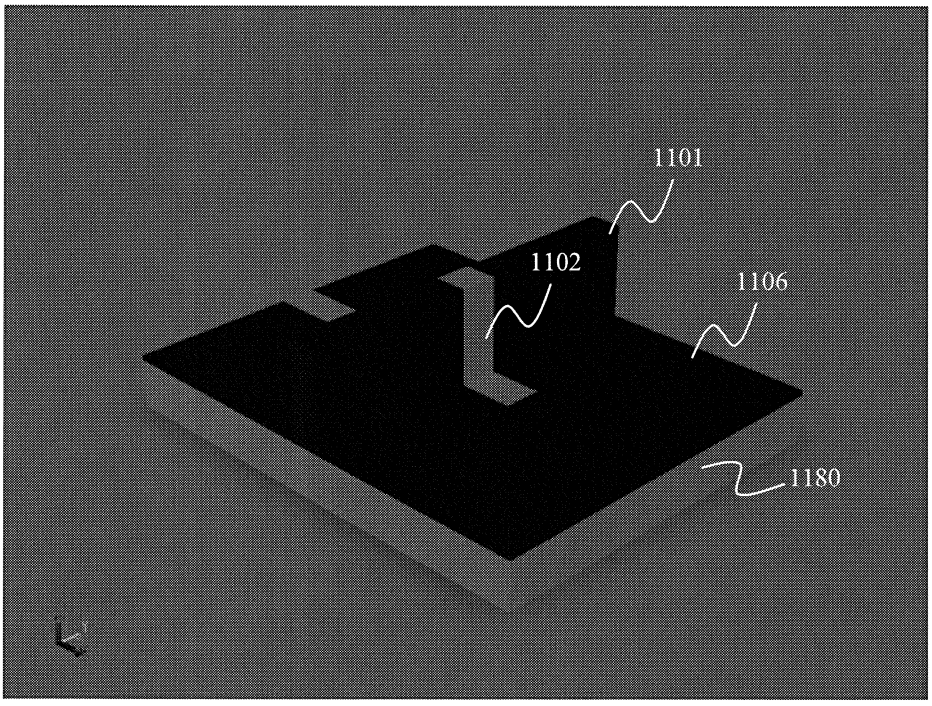

FIG. 11 (k)

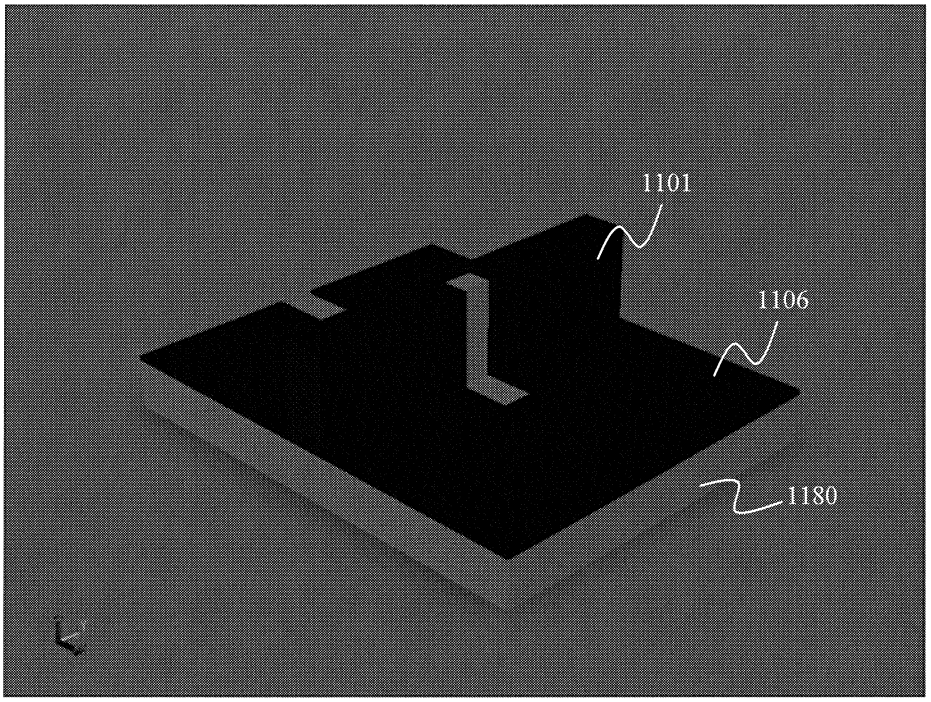

FIG. 11 (l)

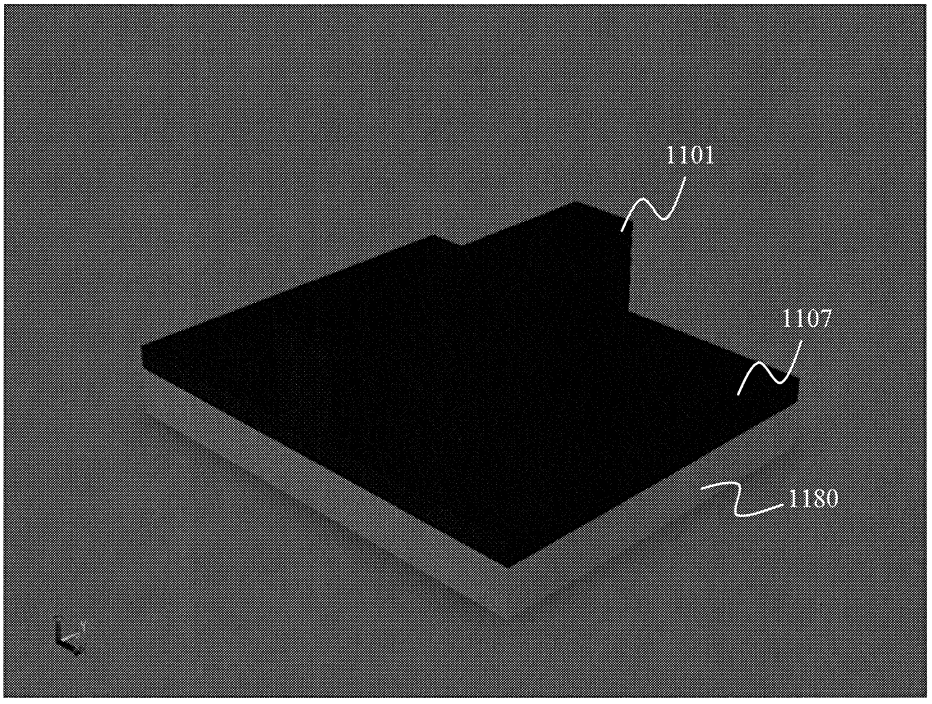

FIG. 11 (m)

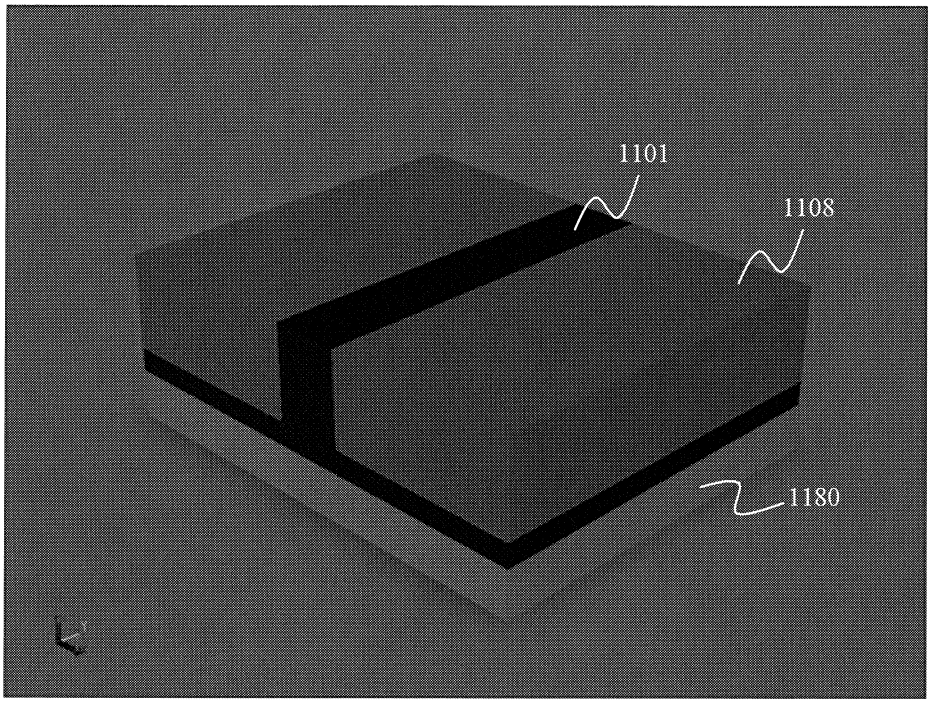

FIG. 11 (n)

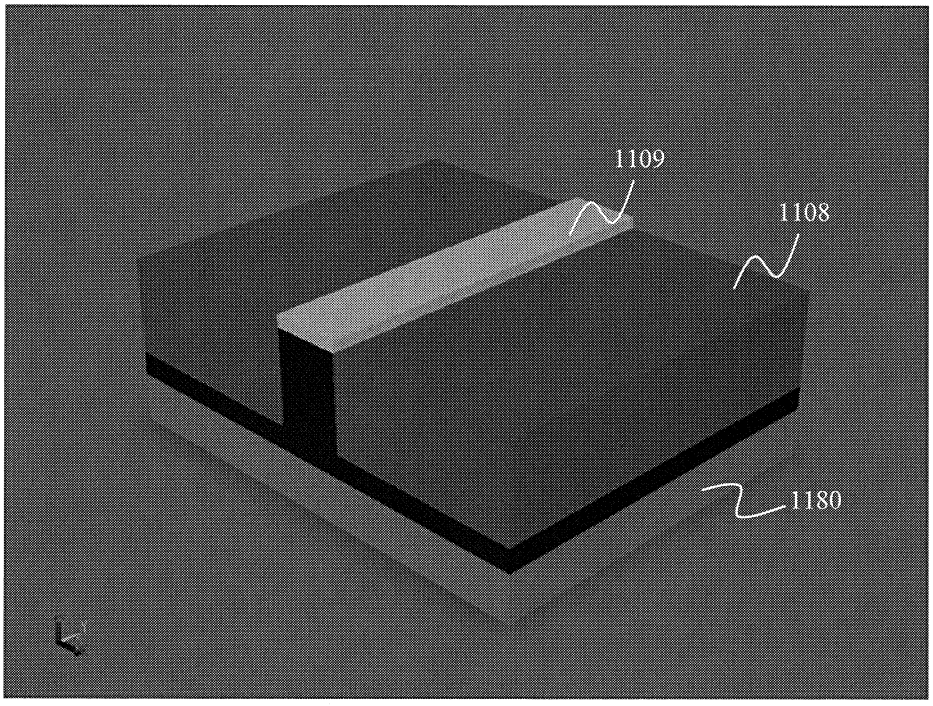

FIG. 11 (o)

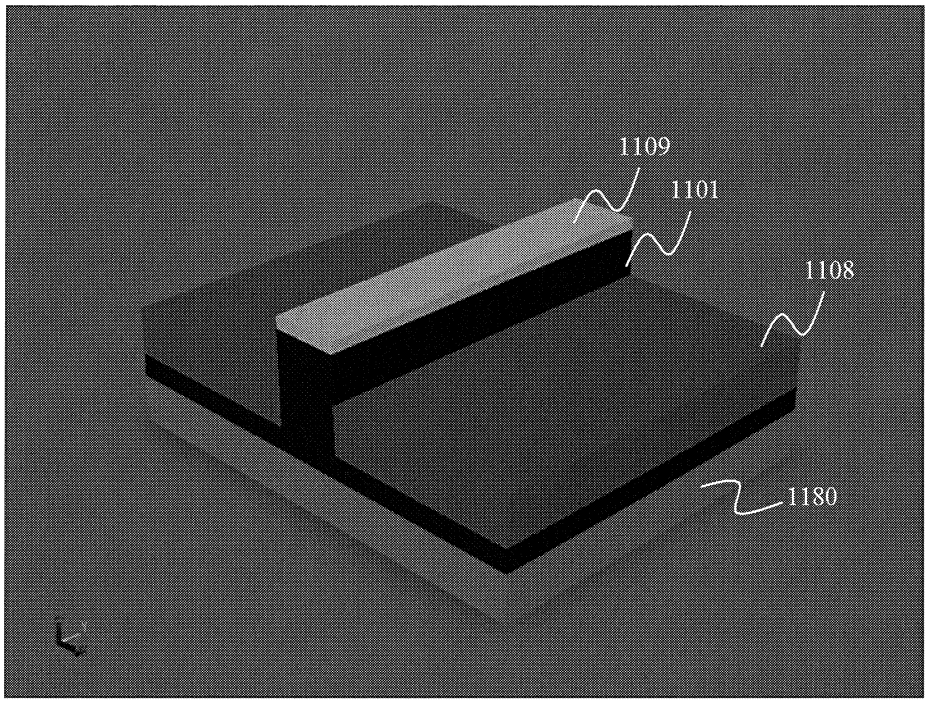

FIG. 11 (p)

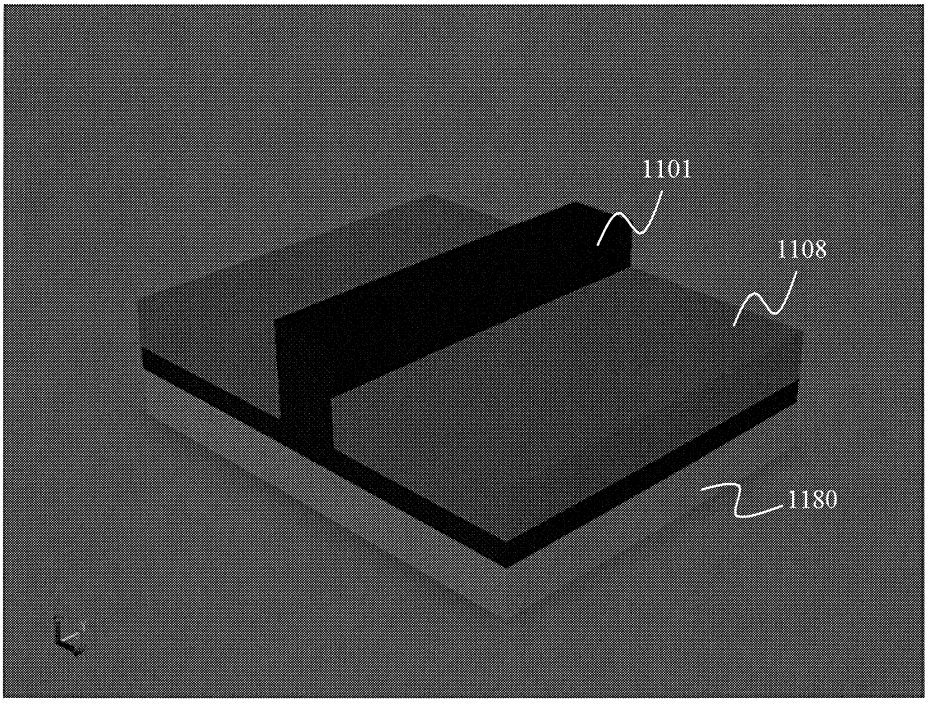

FIG. 11 (q)

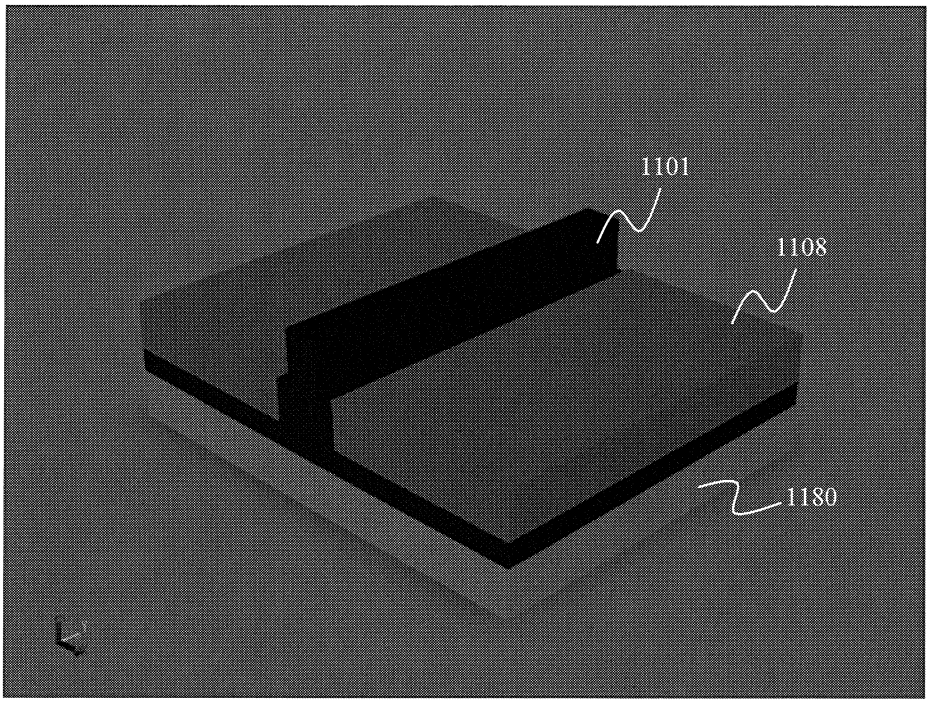

FIG. 11 (r)

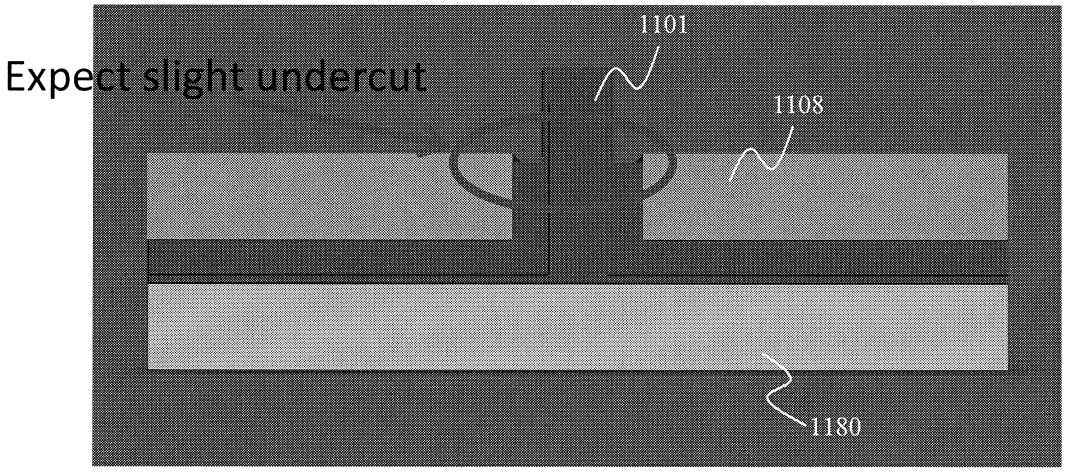

FIG. 11 (s)

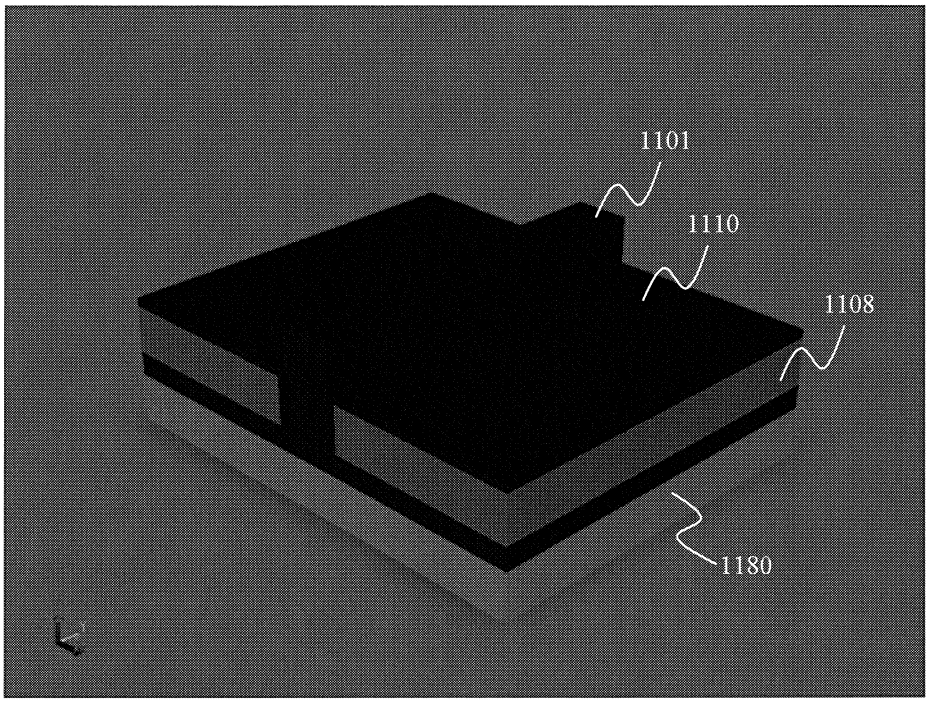

FIG. 11 (t)

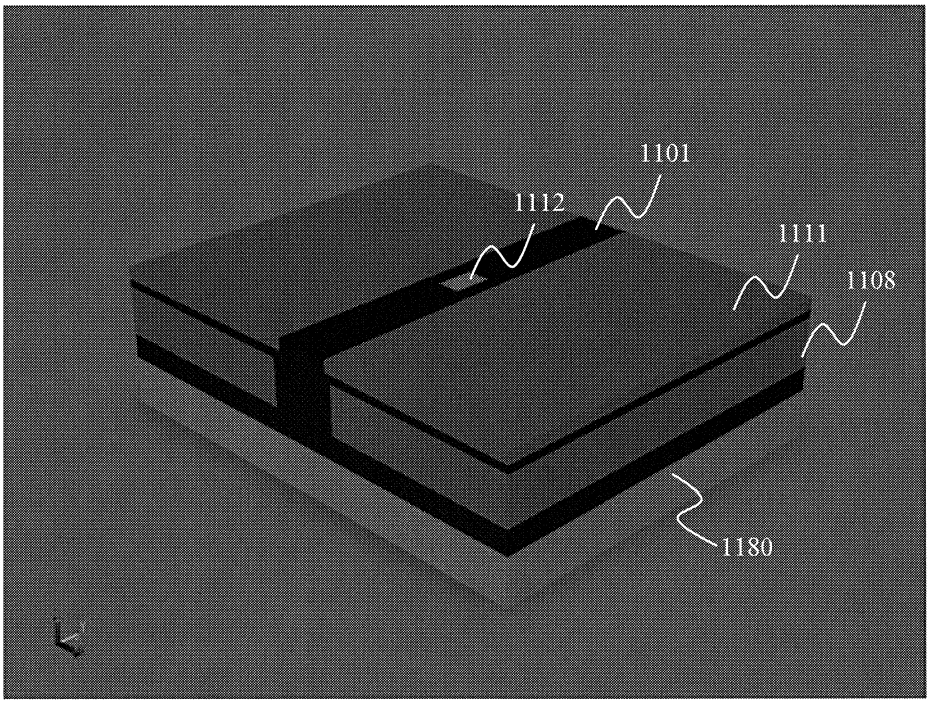

FIG. 11 (u)

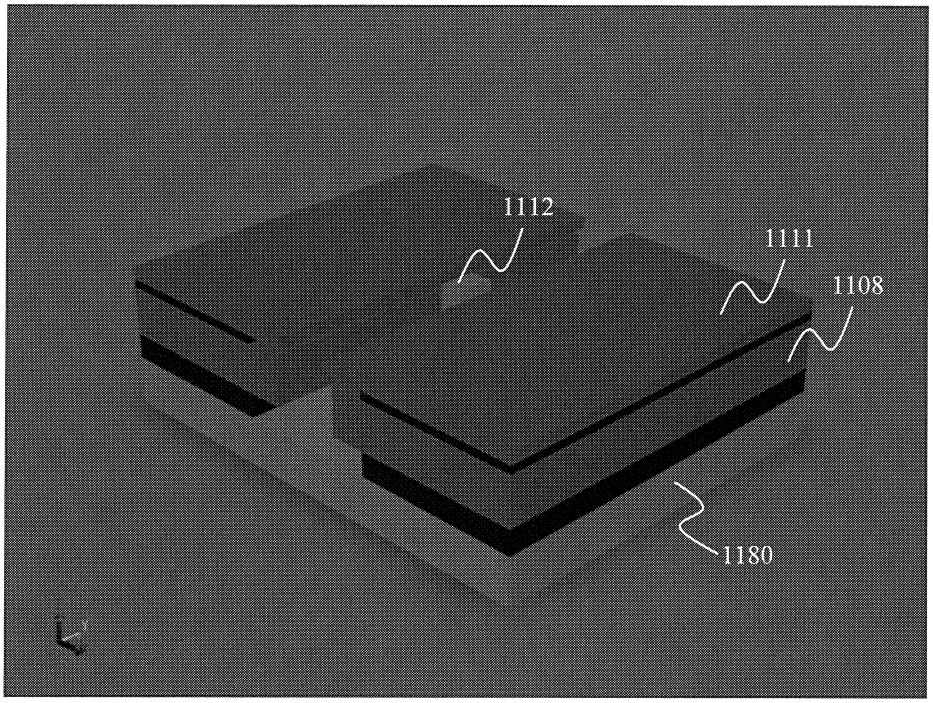

FIG. 11 (v)

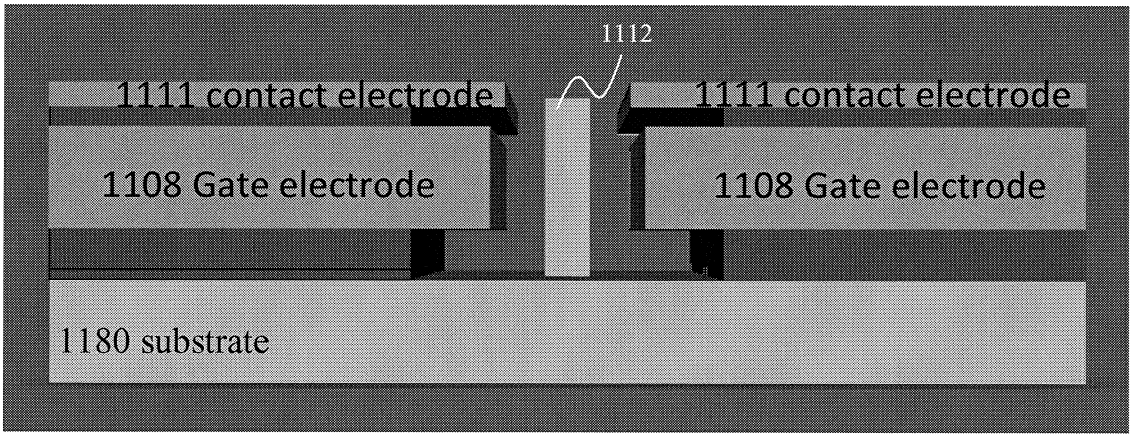

FIG. 12 (l)

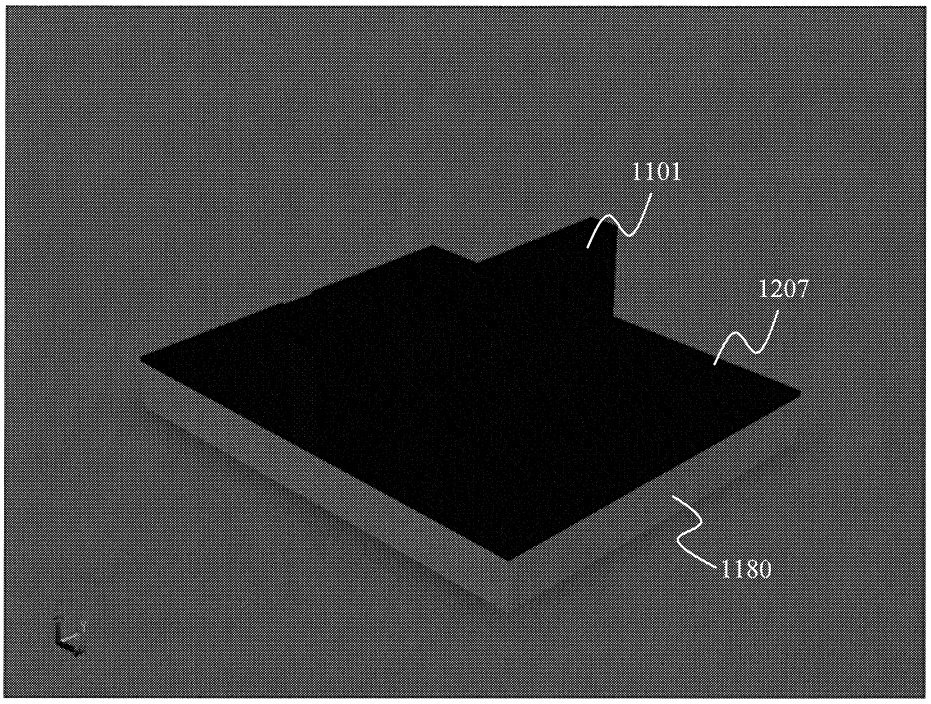

FIG. 12 (m)

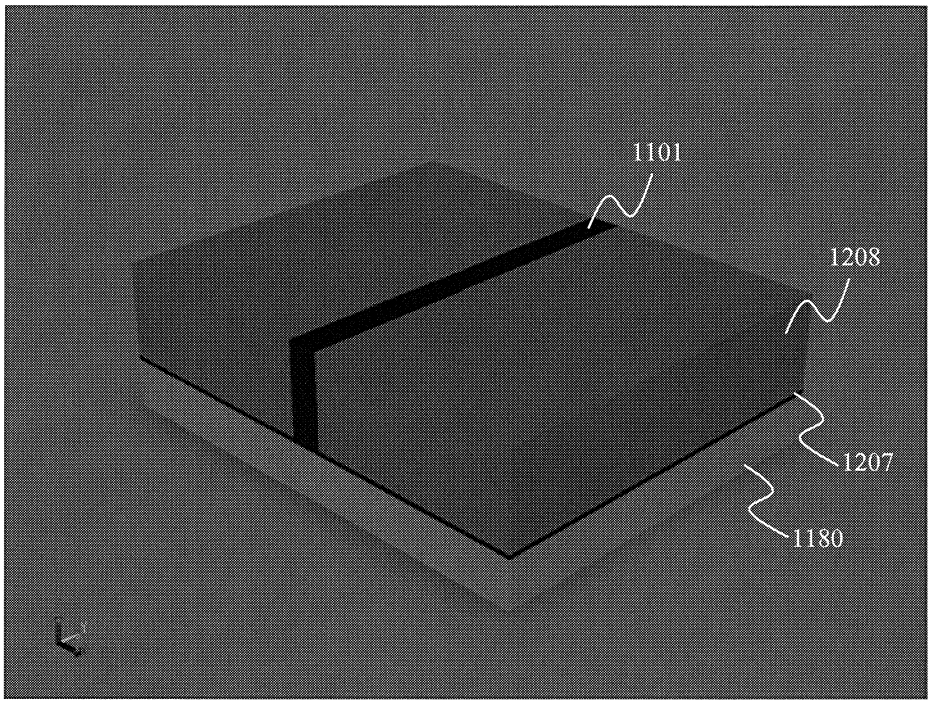

FIG. 12 (n)

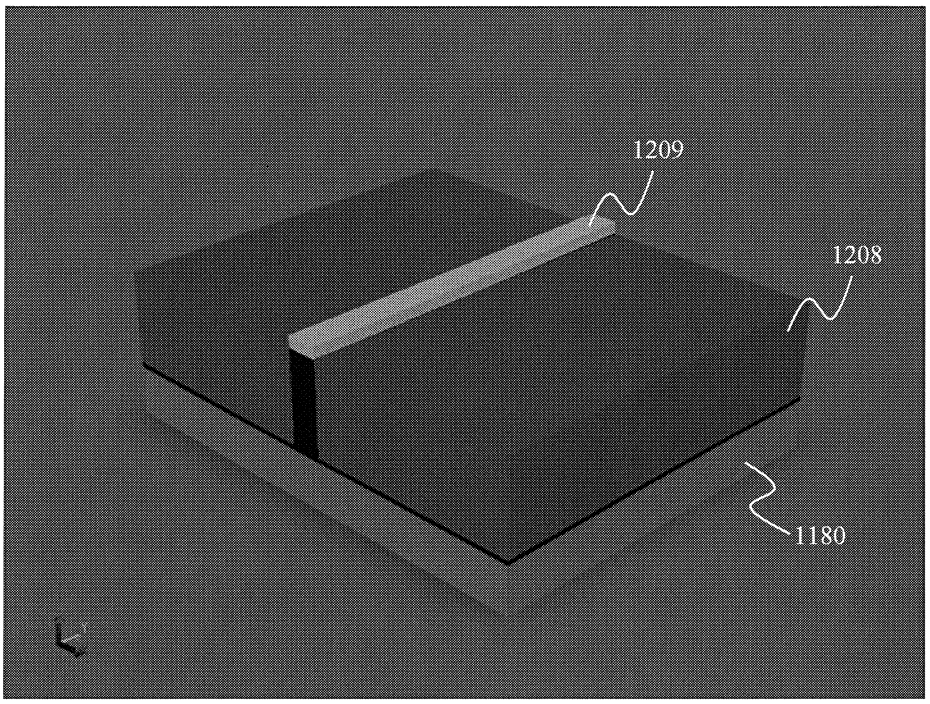

FIG. 12 (o)

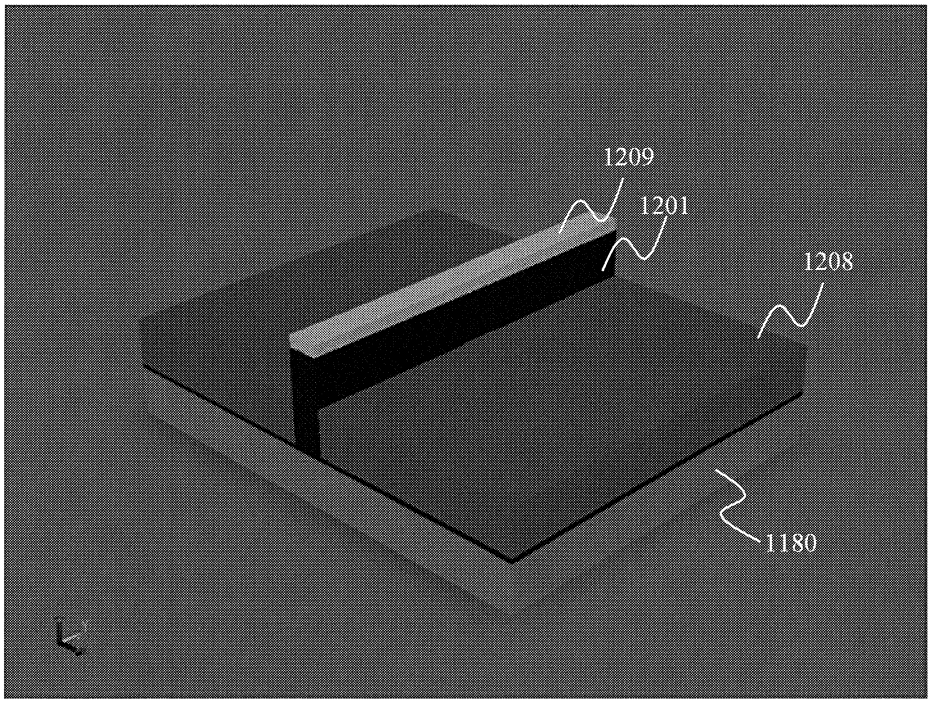

FIG. 12 (p)

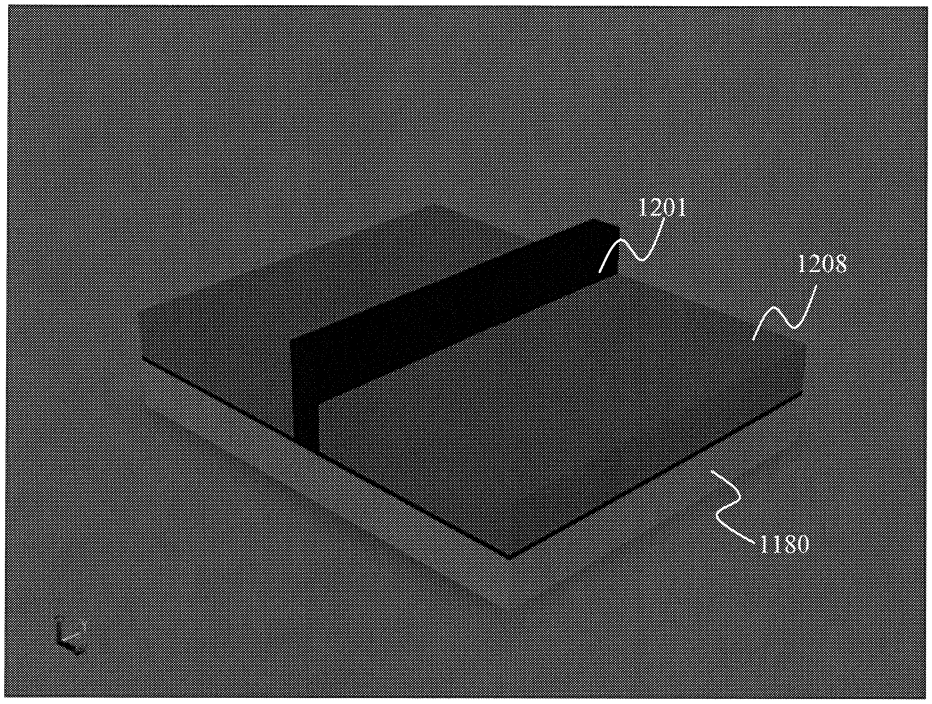

FIG. 12 (q)

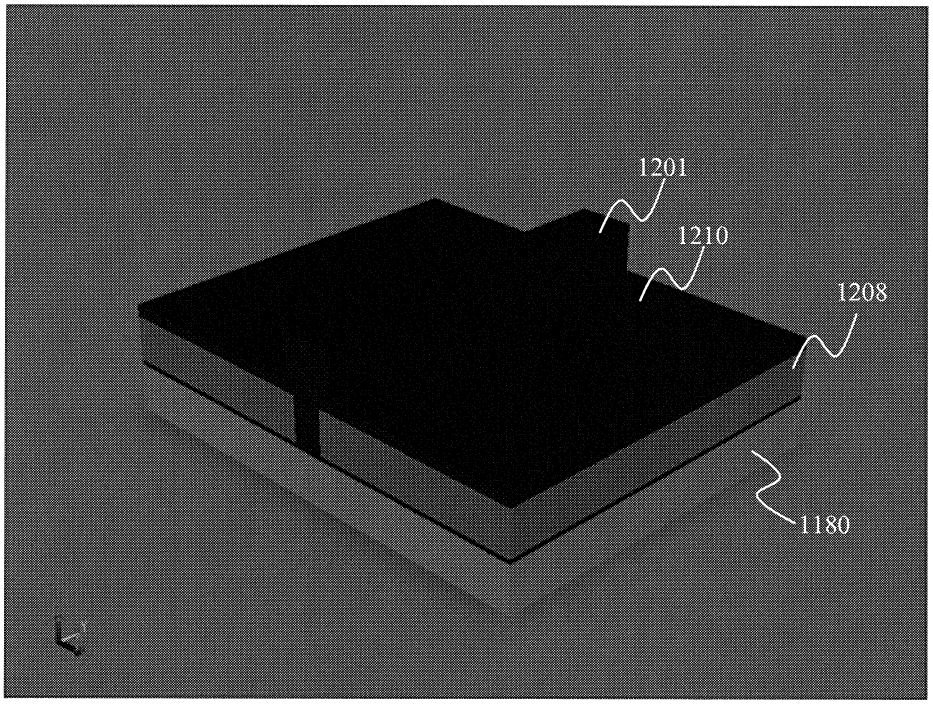

FIG. 12 (r)

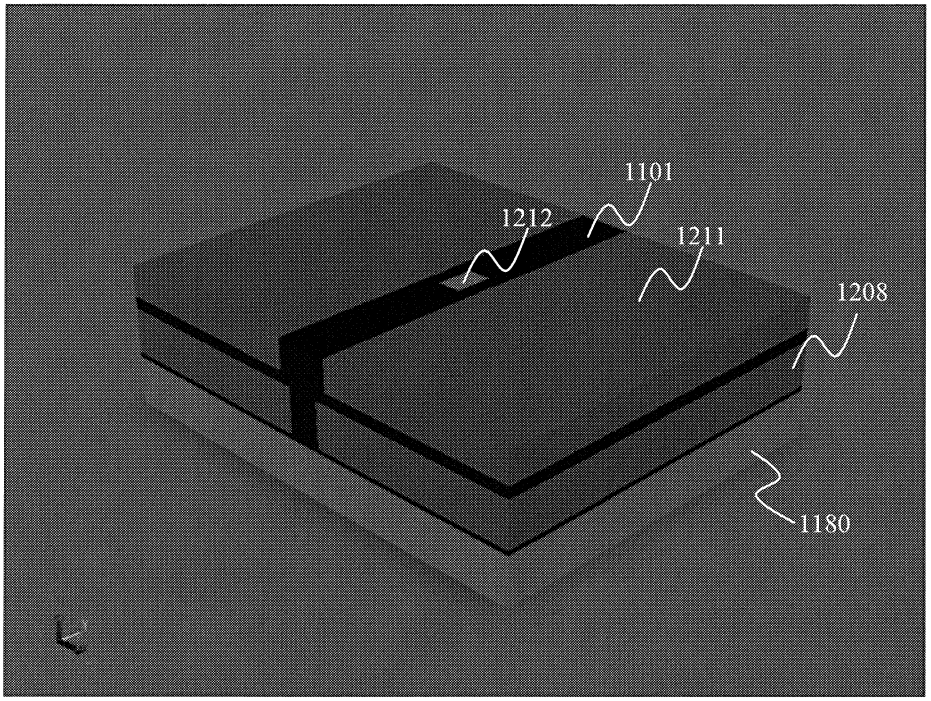

FIG. 12 (s)

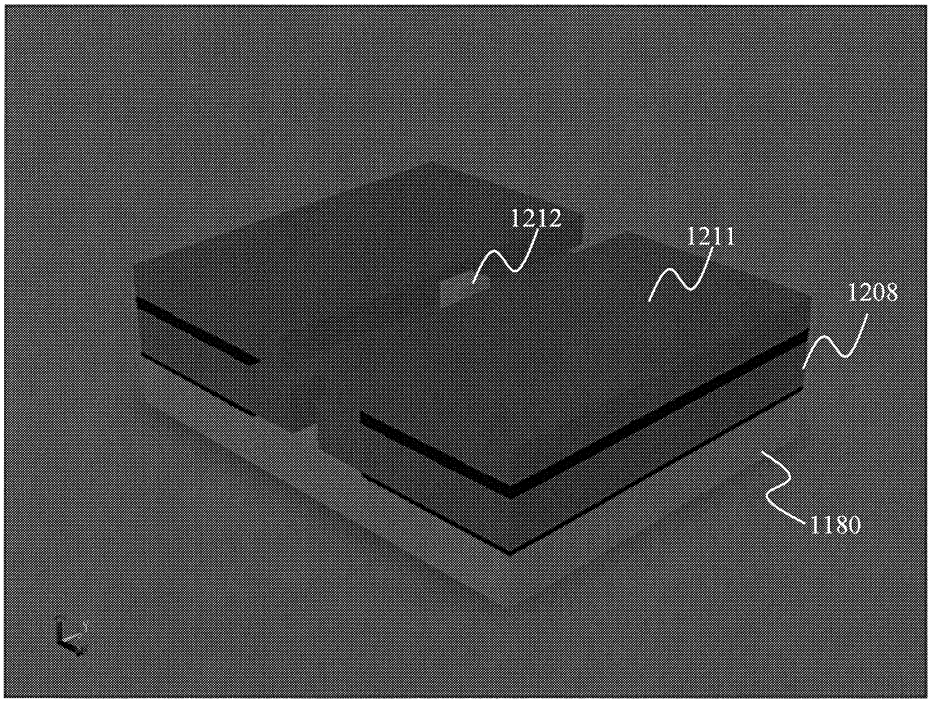

FIG. 12 (t)

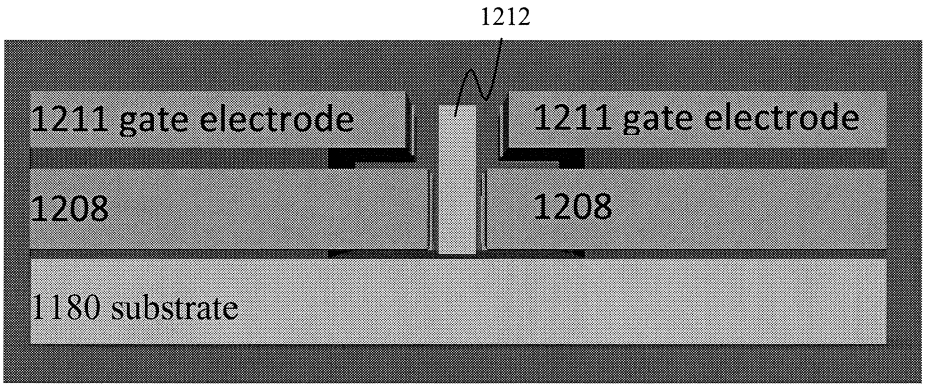

FIG. 13 (a)

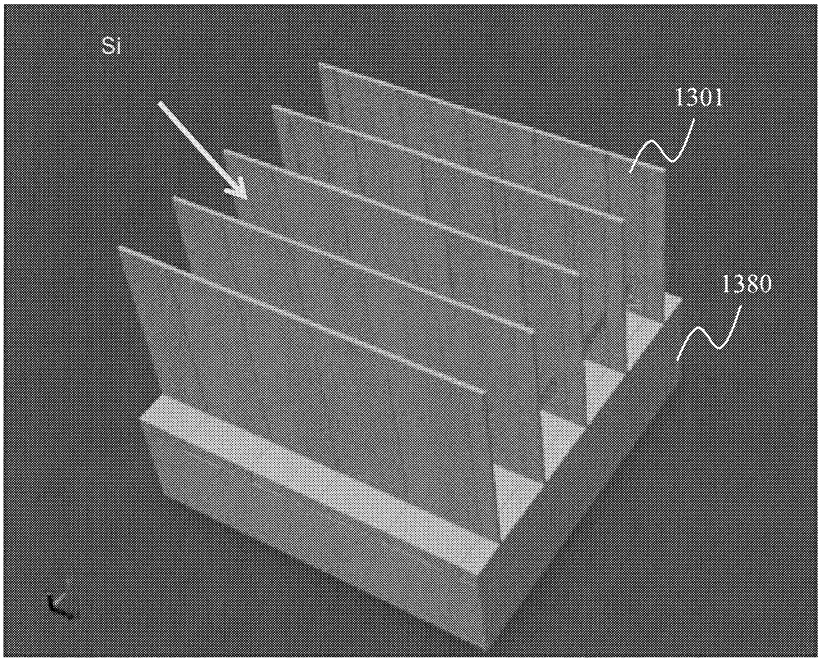

FIG. 13 (b)

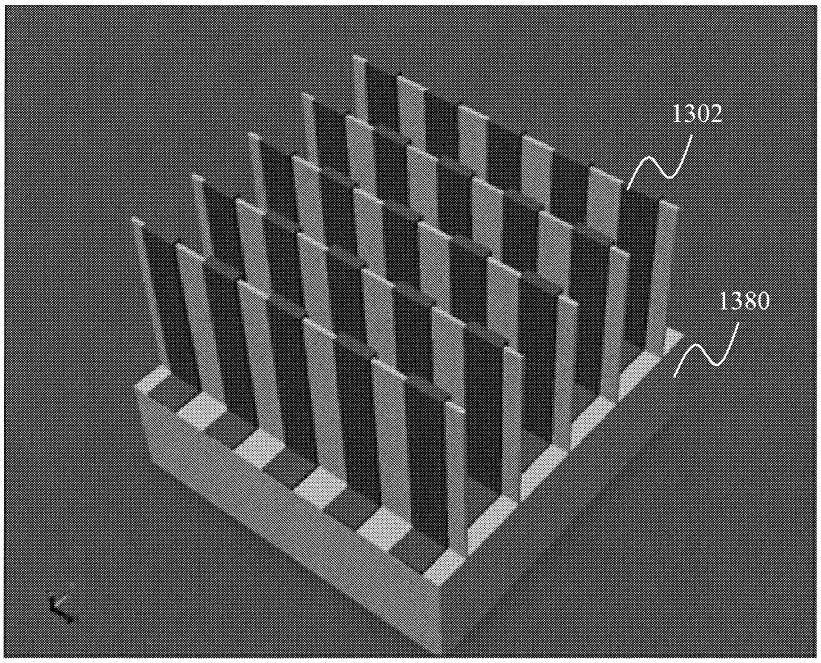

FIG. 13 (c)

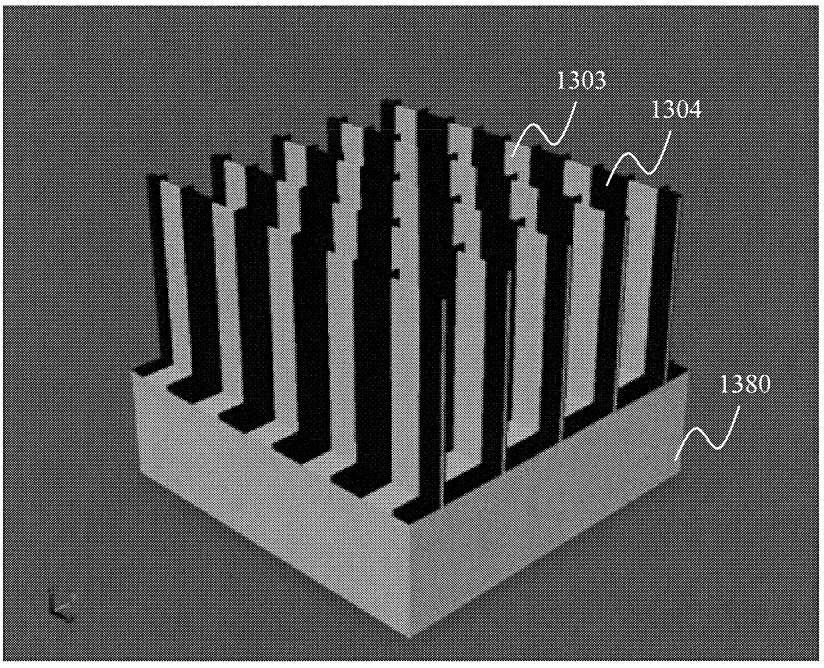

FIG. 13 (d)

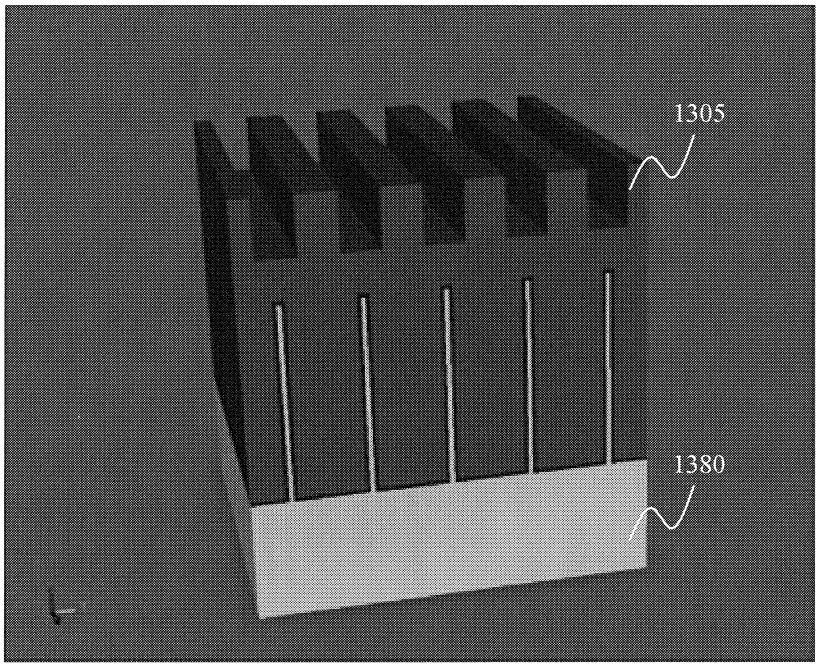

FIG. 14 (a)

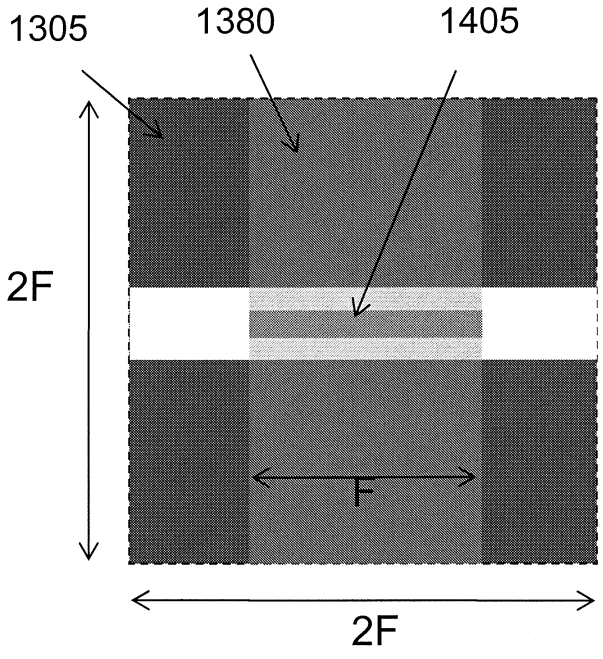

FIG. 14 (b)

