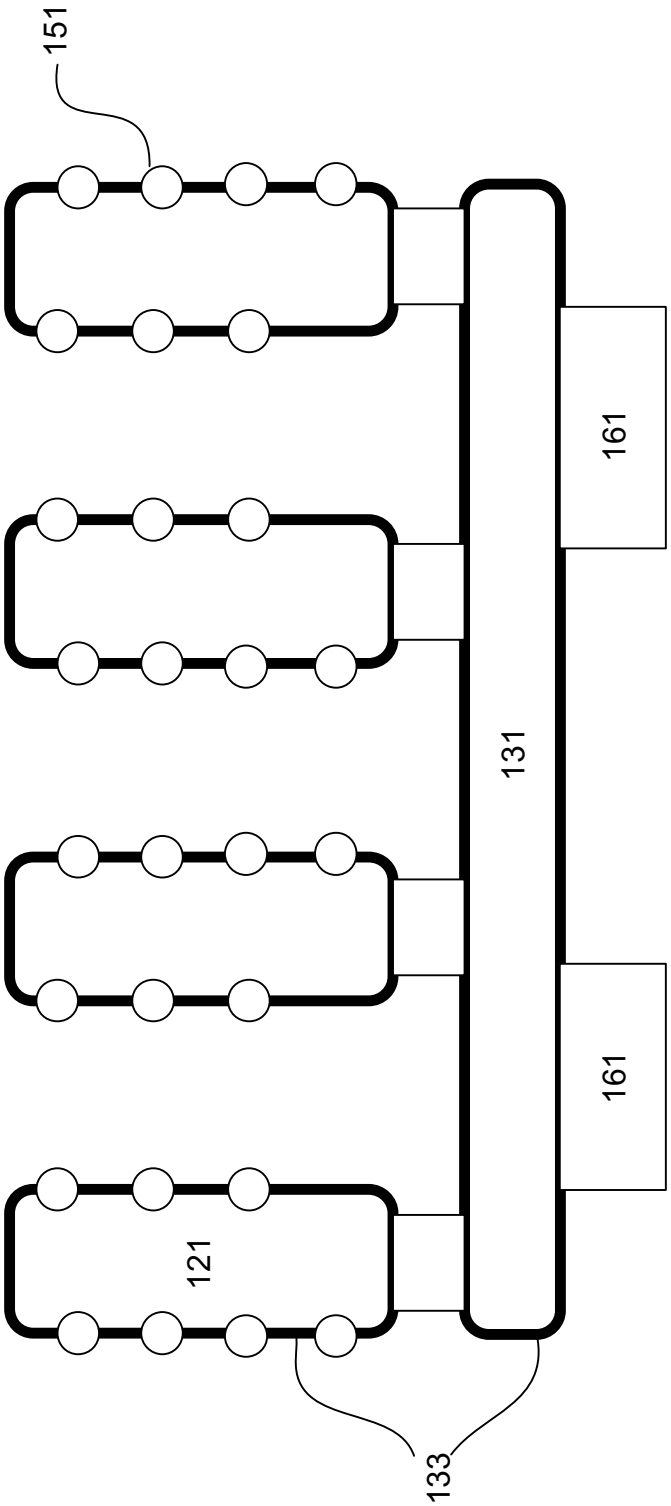

Fig. 1

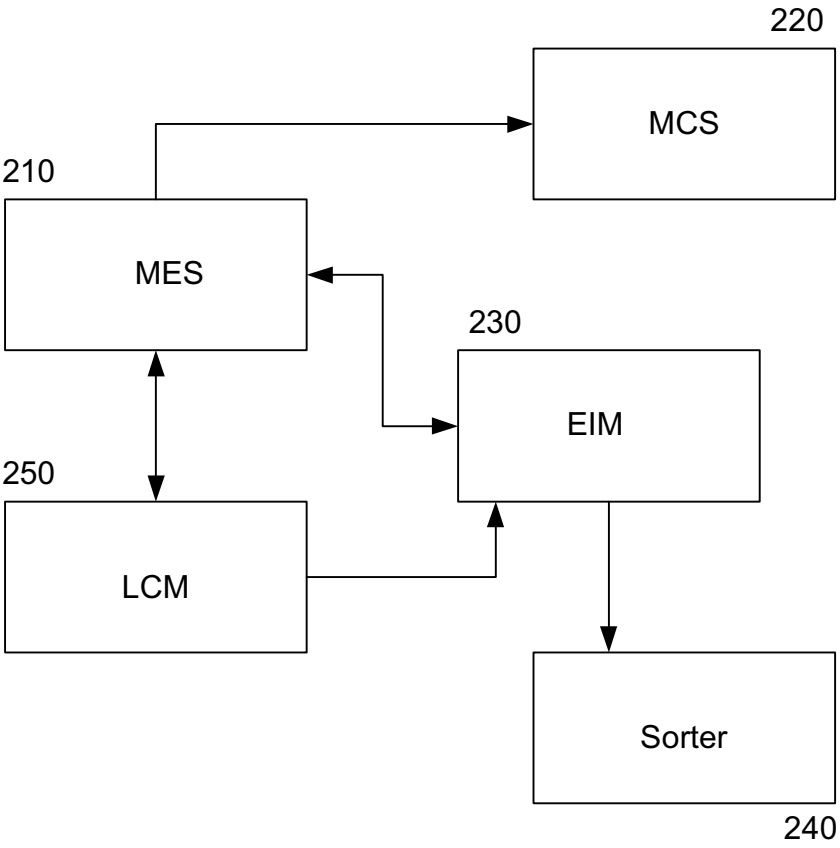

200

Fig. 2

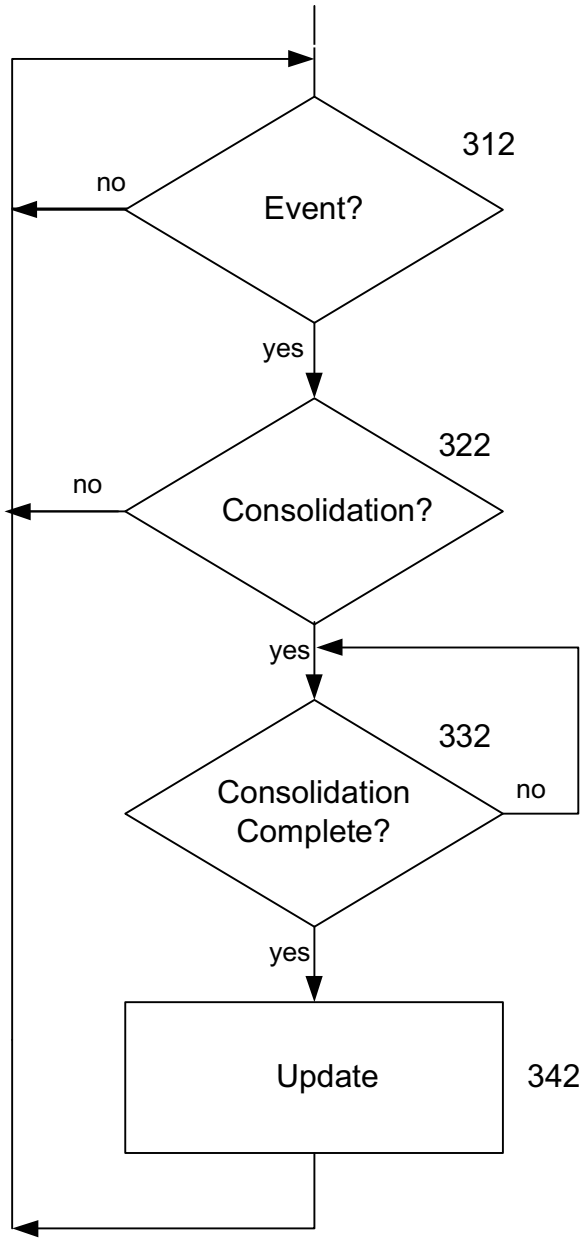
312
Event?
no
yes
322
Consolidation?
no
yes
332
Consolidation Complete?
no
yes
Update
342
302

Fig. 3

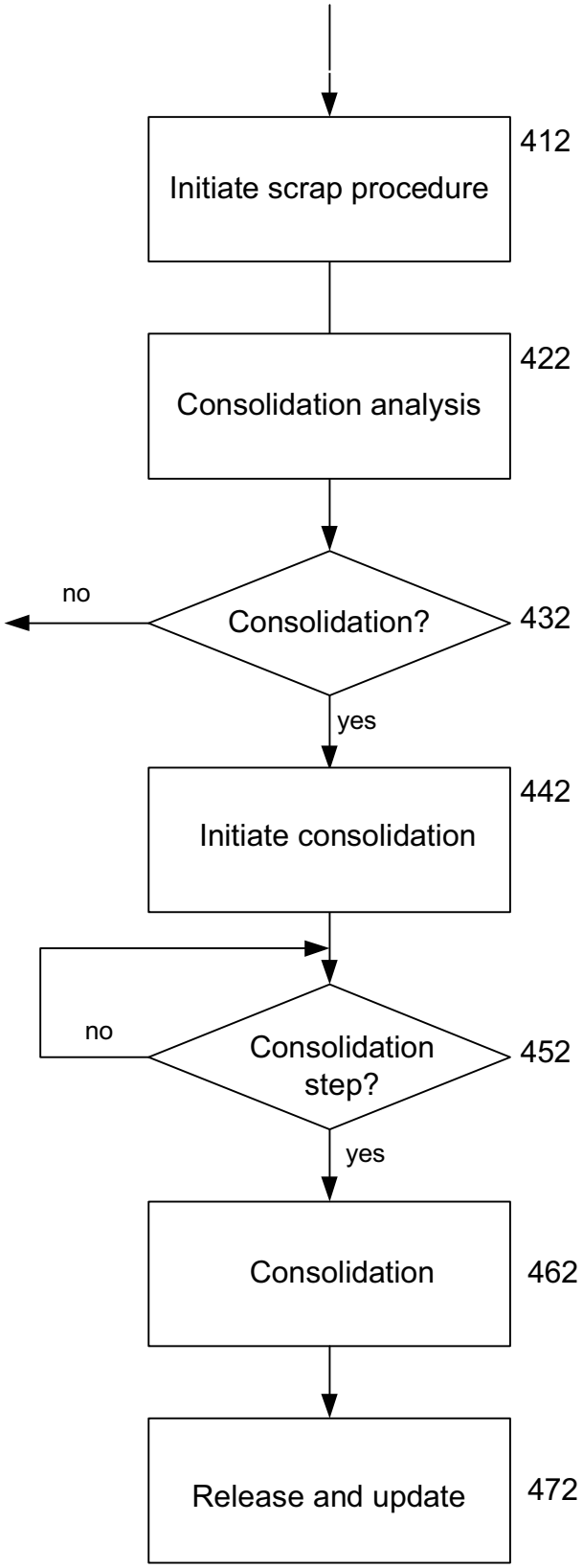
Initiate scrap procedure
412
Consolidation analysis
422
Consolidation?
432
no
yes
Initiate consolidation
442
Consolidation step?
452
no
yes
Consolidation
462
Release and update
472

404

Fig. 4

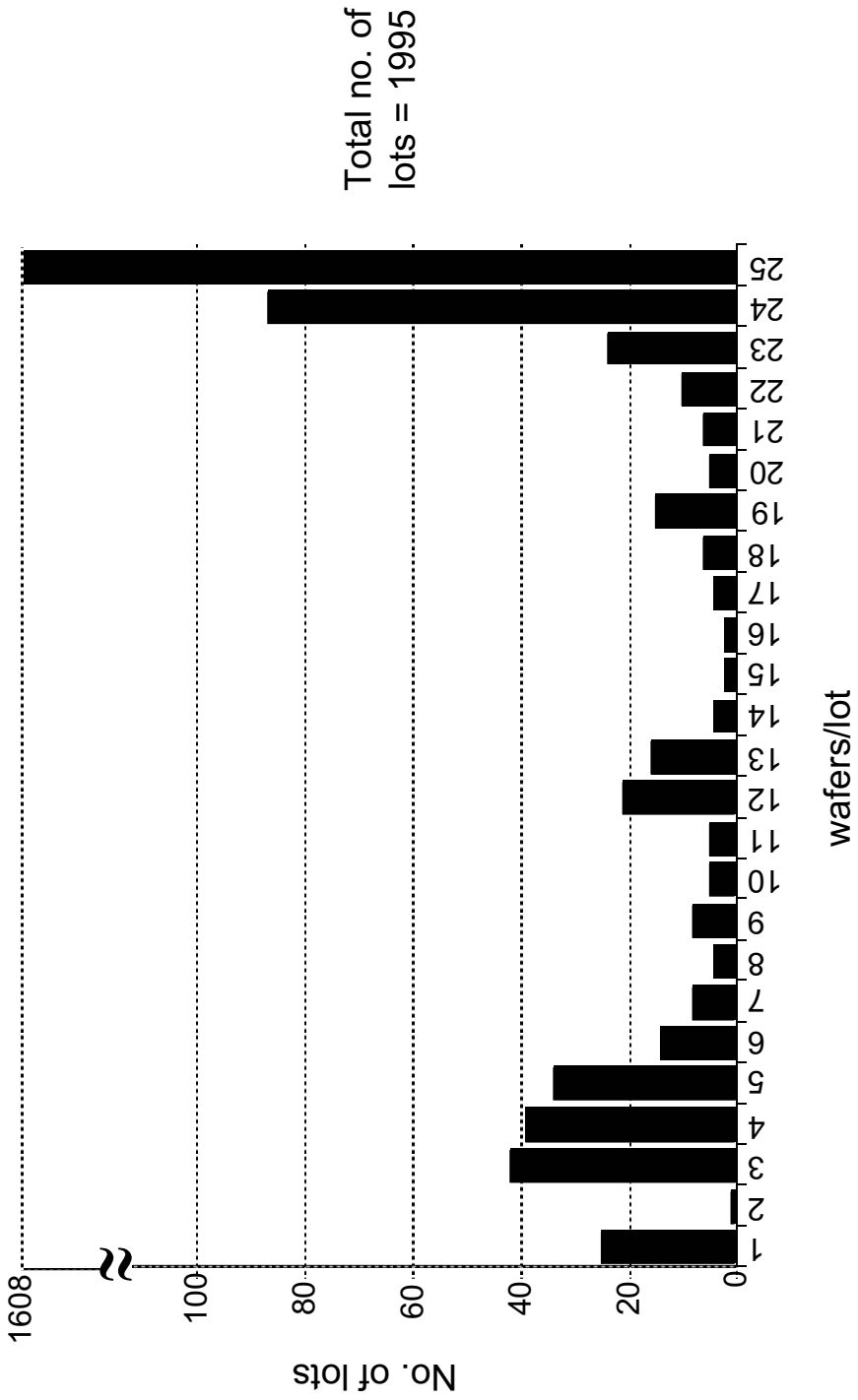
Total no. of
lots = 1995
No. of lots
1608
100
80
60
40
20
0
1
2
3
4
5
6
7
8
9
10
11
12
13
14
15
16
17
18
19
20
21
22
23
24
25
wafers/lot

Fig. 5

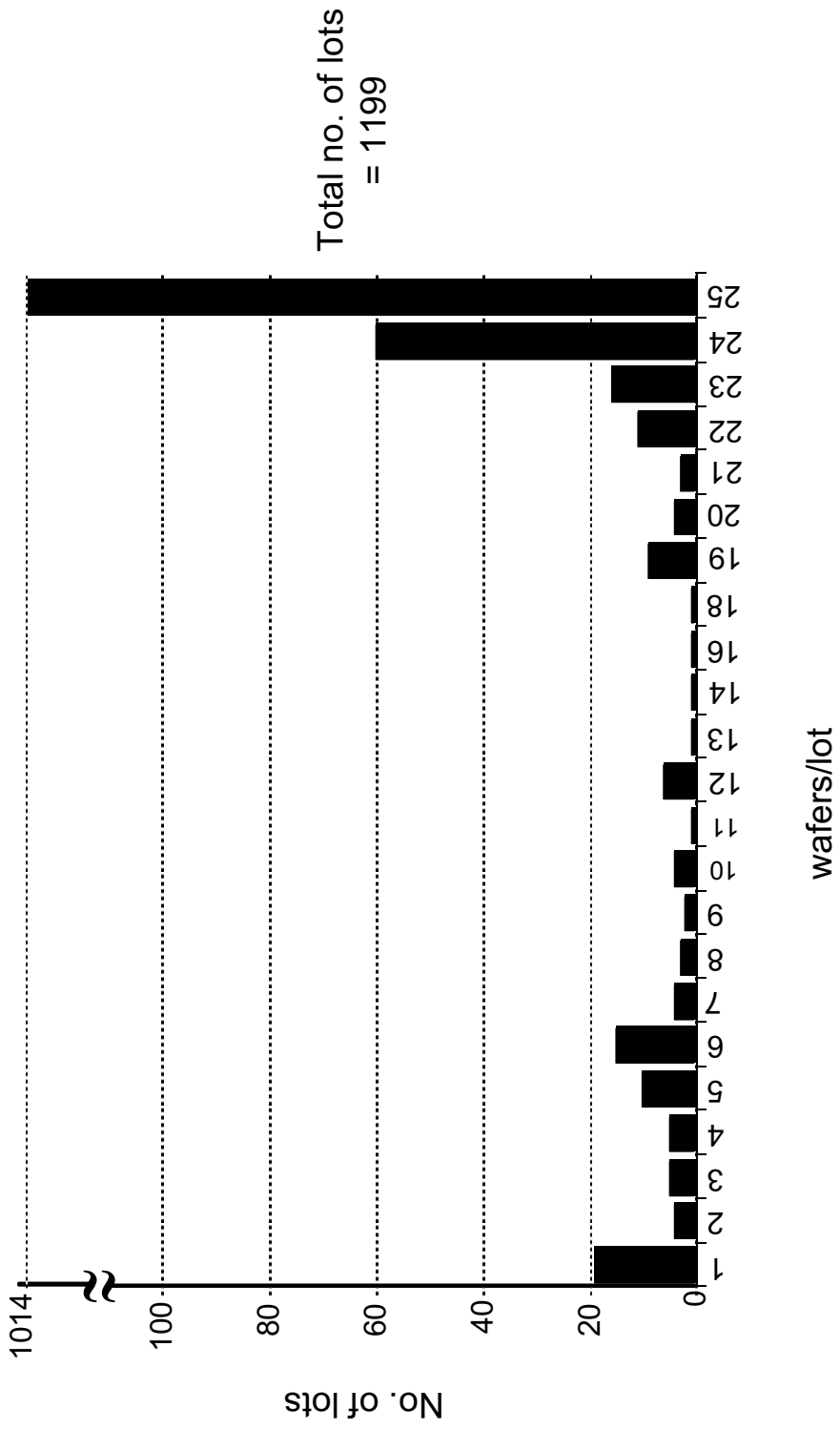
Total no. of lots
= 1199
No. of lots
1014
100
80
60
40
20
0
1
2
3
4
5
6
7
8
9
10
11
12
13
14
16
18
19
20
21
22
23
24
25
wafers/lot

Fig. 6