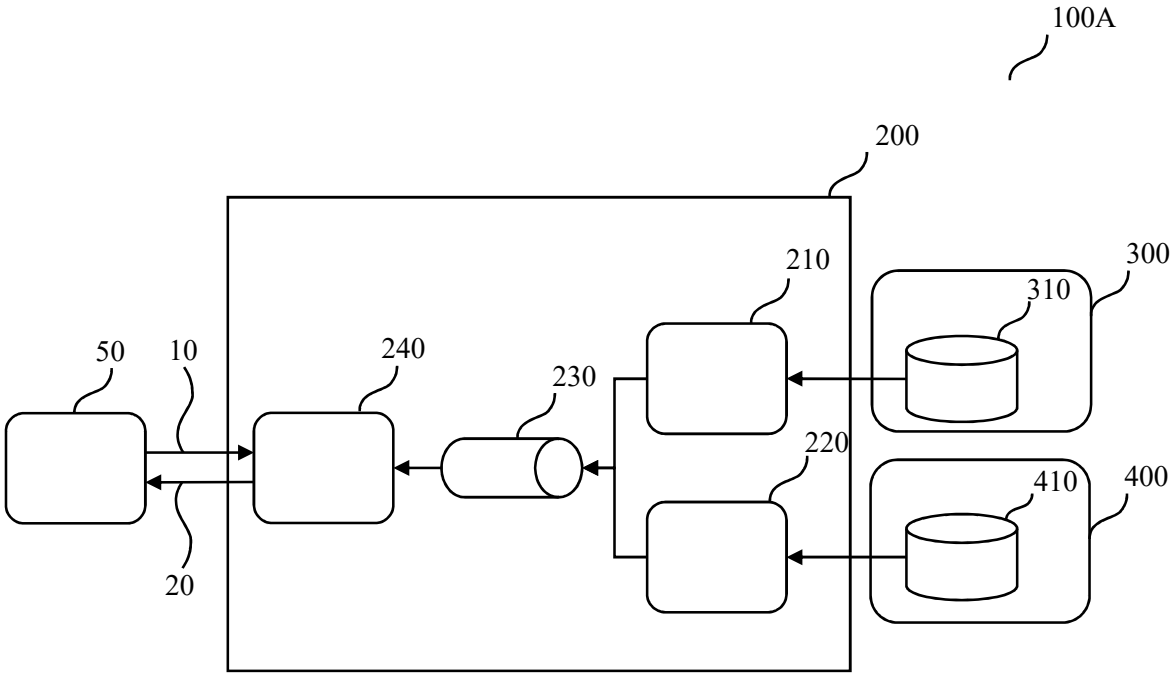
100A
200
210
300
310
50
10
240
230
220
410
400
20

FIG. 1A

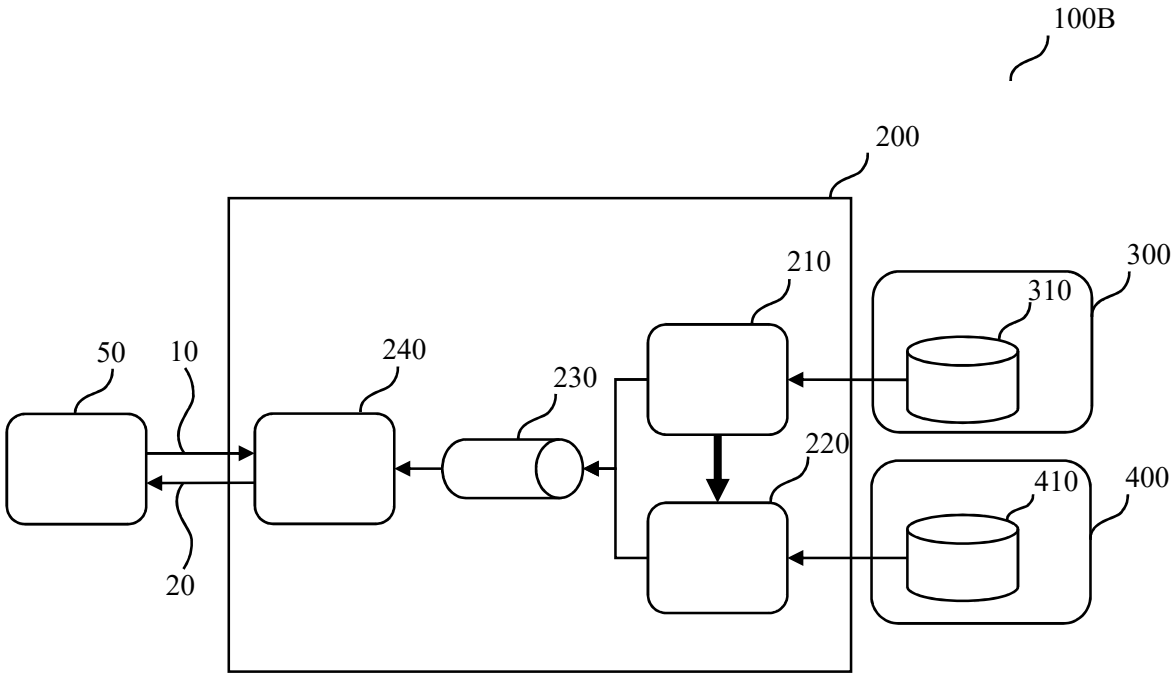
100B
200
210
300
310
50
10
240
230
220
410
400
20

FIG. 1B

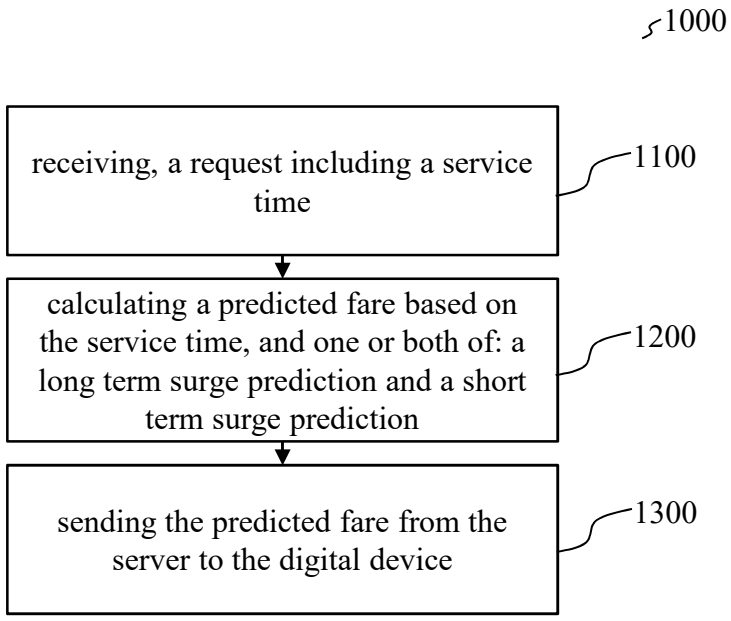
1000
receiving, a request including a service time
1100
calculating a predicted fare based on the service time, and one or both of: a long term surge prediction and a short term surge prediction
1200
sending the predicted fare from the server to the digital device
1300

FIG. 2

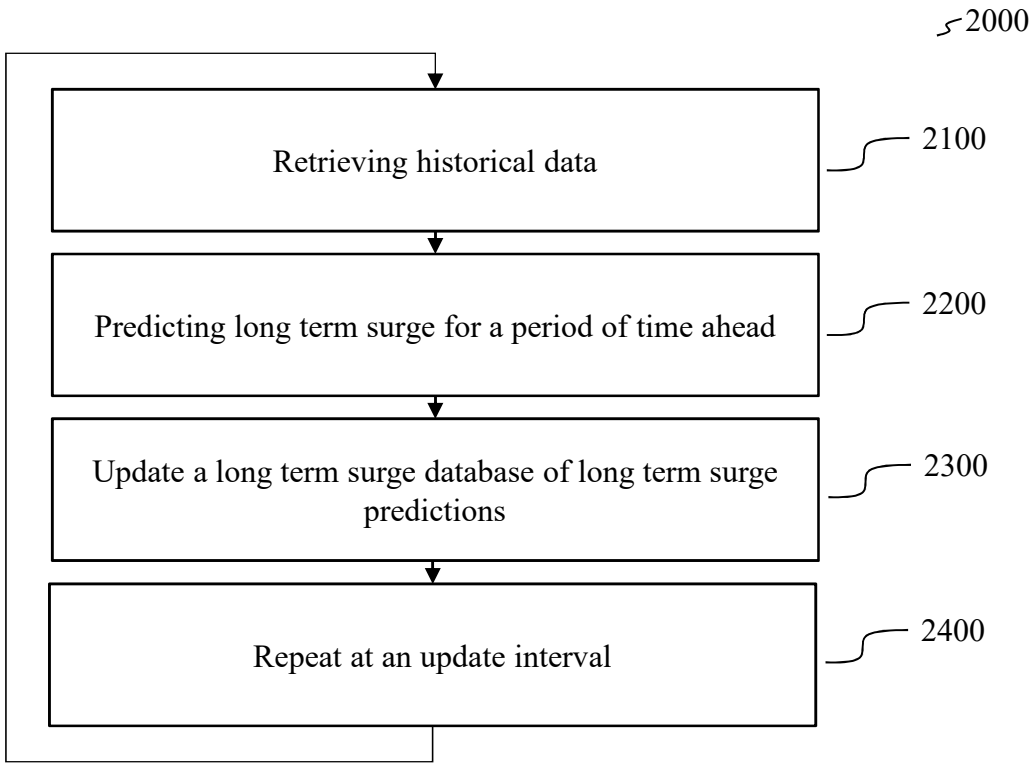
2000
Retrieving historical data
2100
Predicting long term surge for a period of time ahead
2200
Update a long term surge database of long term surge predictions
2300
Repeat at an update interval
2400

FIG. 3A

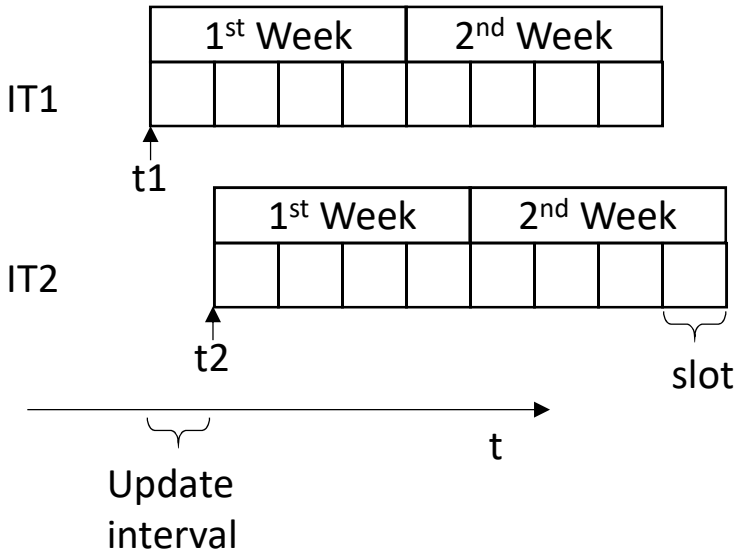
1st Week
2nd Week
IT1
t1
1st Week
2nd Week
IT2
t2
slot
t
Update
interval

FIG. 3B

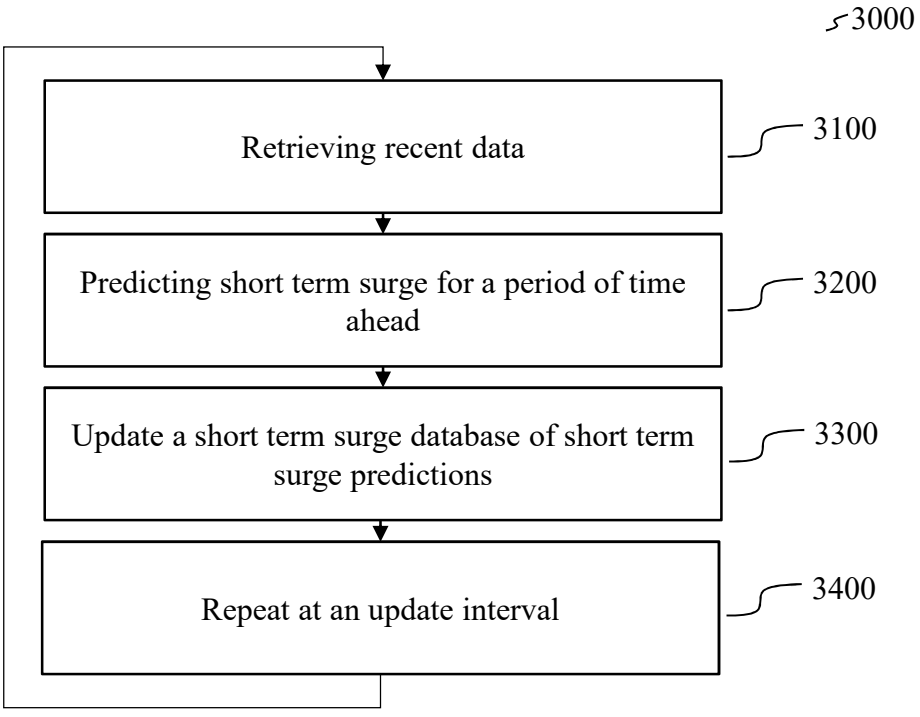
3000
Retrieving recent data
3100
Predicting short term surge for a period of time ahead
3200
Update a short term surge database of short term surge predictions
3300
Repeat at an update interval
3400

FIG. 4

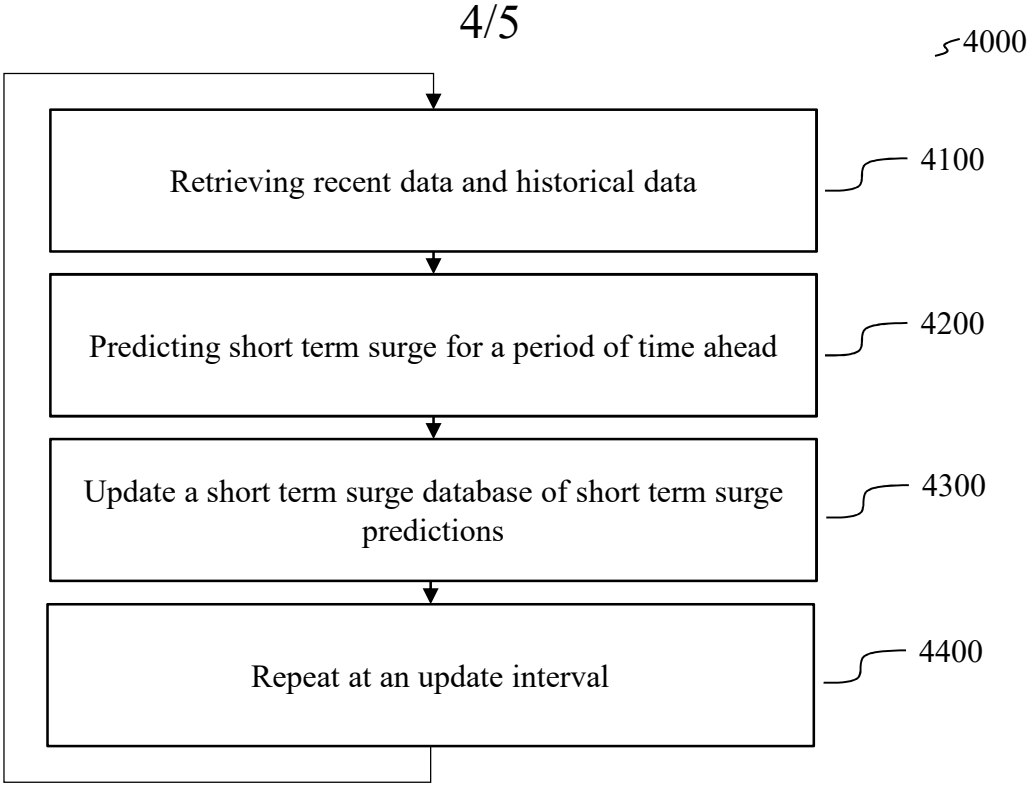
4000
Retrieving recent data and historical data
4100
Predicting short term surge for a period of time ahead
4200
Update a short term surge database of short term surge predictions
4300
Repeat at an update interval
4400

FIG. 5

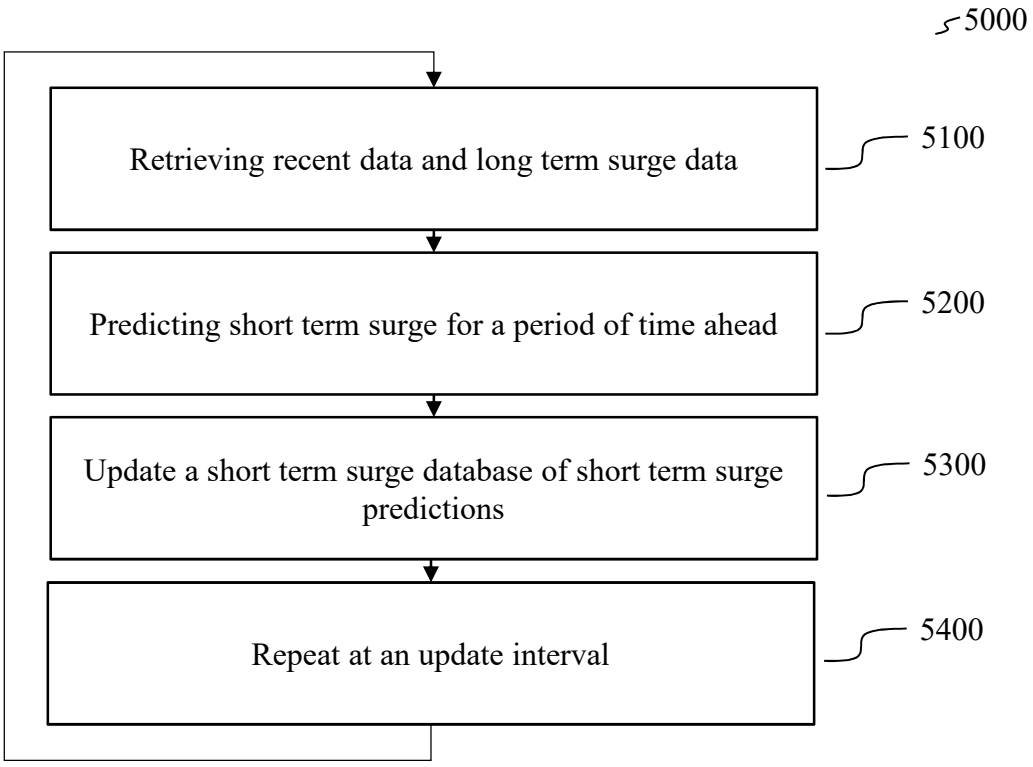
5000
Retrieving recent data and long term surge data
5100
Predicting short term surge for a period of time ahead
5200
Update a short term surge database of short term surge predictions
5300
Repeat at an update interval
5400

FIG. 6

Service Request UID	TimeHash	GeoHash
1	10:02	#1
2	10:05	#1
3	10:06	#2
4	10:08	#1
5	10:09	#1
...	...	...

FIG. 7A

GeoHash #1

Time Bin	Surge
10:01-10:10	4
10:11-10:20	15
10:21-10:30	18
10:31-10:40	14
10:41-10:50	7

FIG. 7B

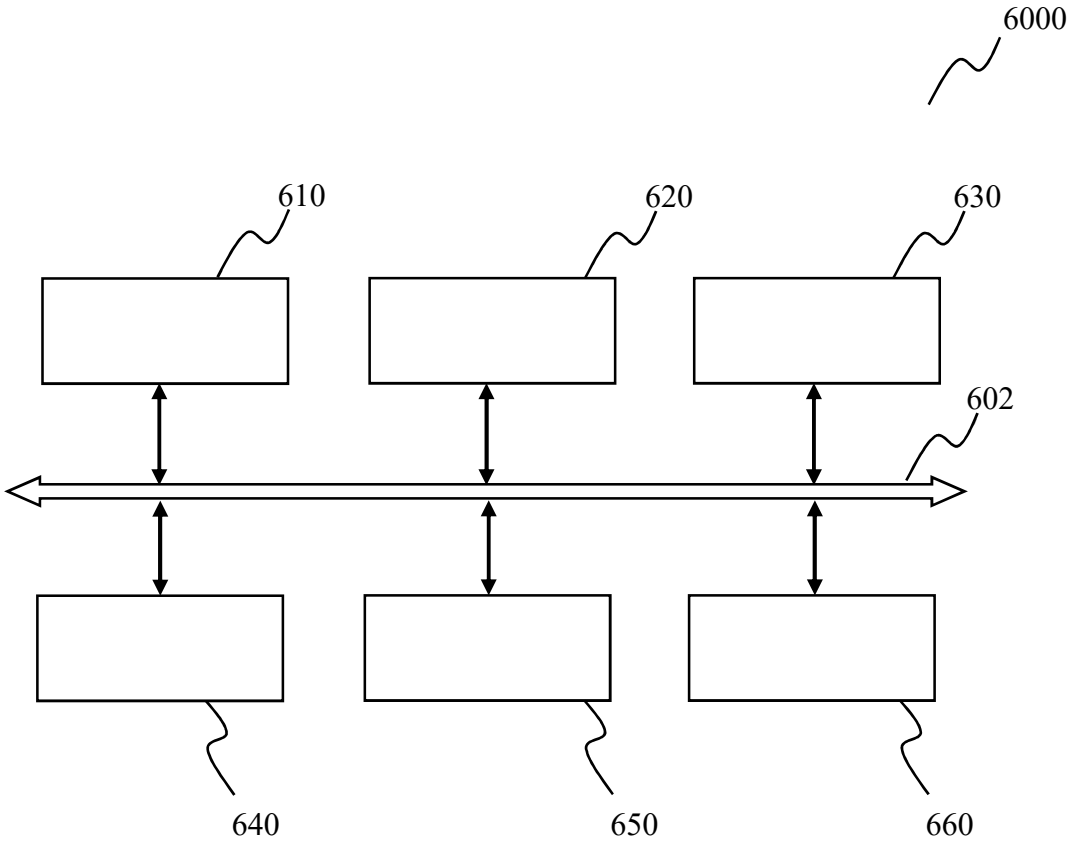

FIG. 8