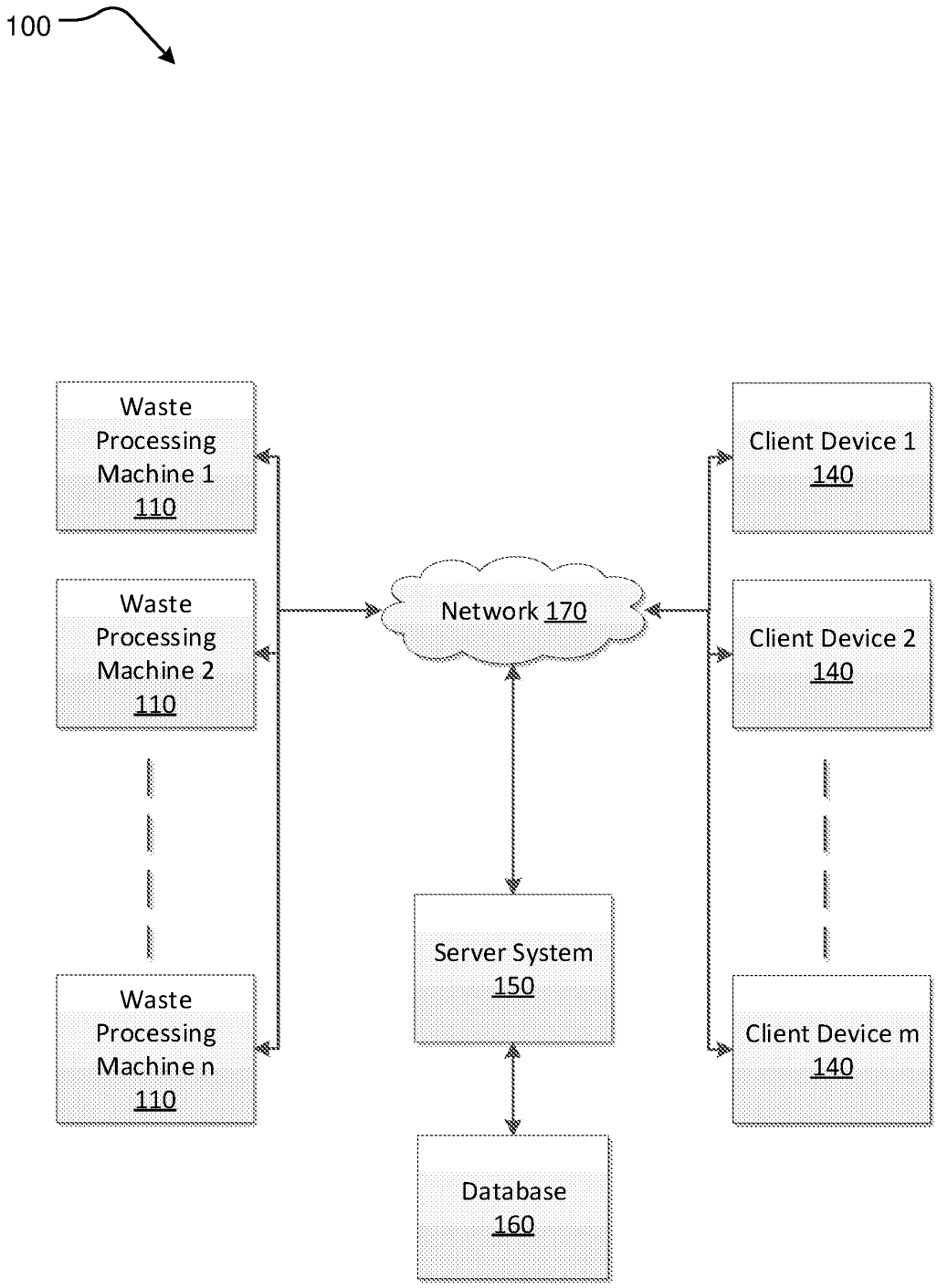
100
Waste Processing Machine 1 110
Waste Processing Machine 2 110
Waste Processing Machine n 110
Network 170
Server System 150
Database 160
Client Device 1 140
Client Device 2 140
Client Device m 140

Figure 1

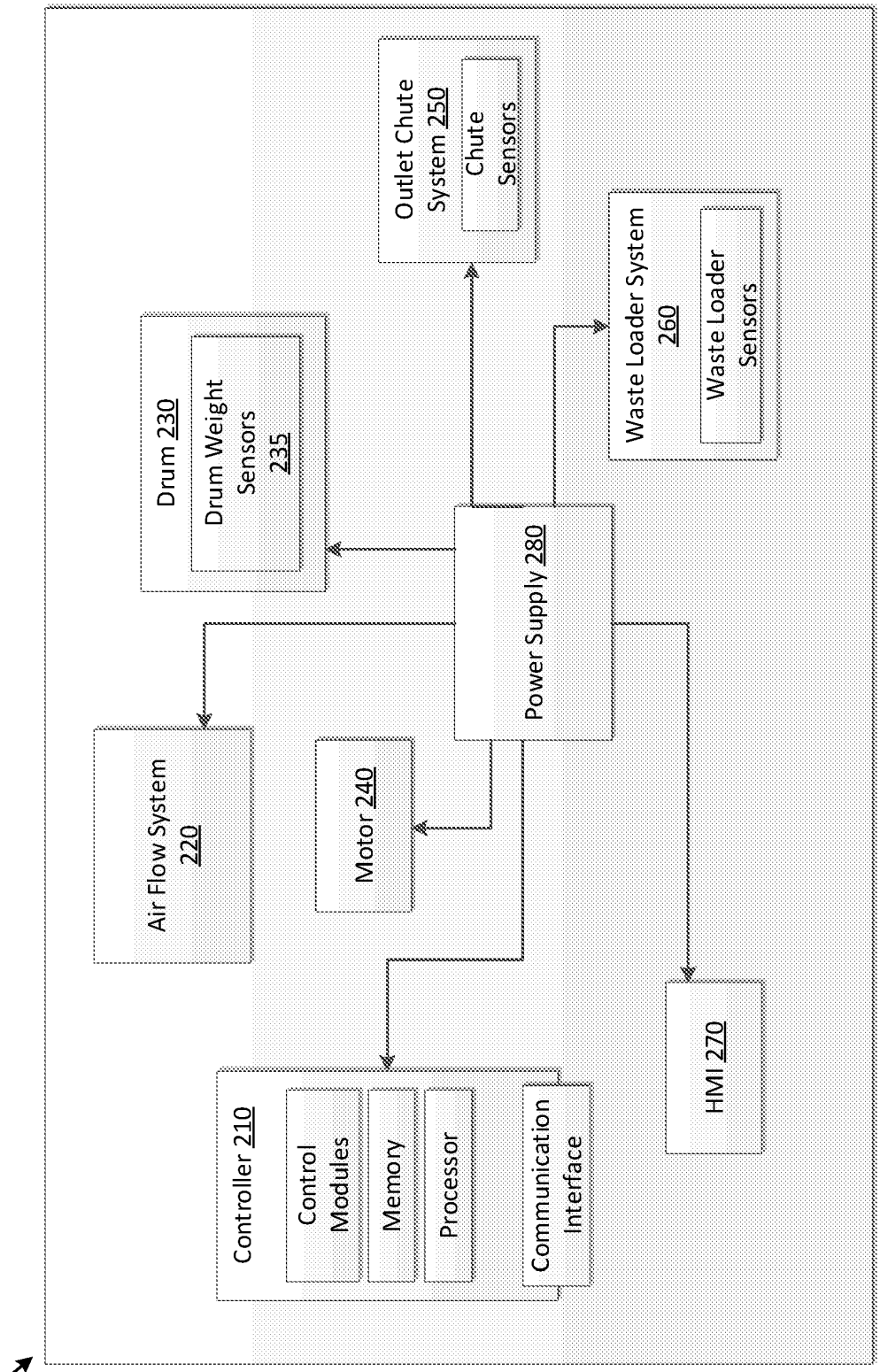
200
Outlet Chute System 250
Chute Sensors
Drum 230
Drum Weight Sensors 235
Waste Loader System 260
Waste Loader Sensors
Power Supply 280
Air Flow System 220
Motor 240
Controller 210
Control Modules
Memory
Processor
Communication Interface
HMI 270

Figure 2

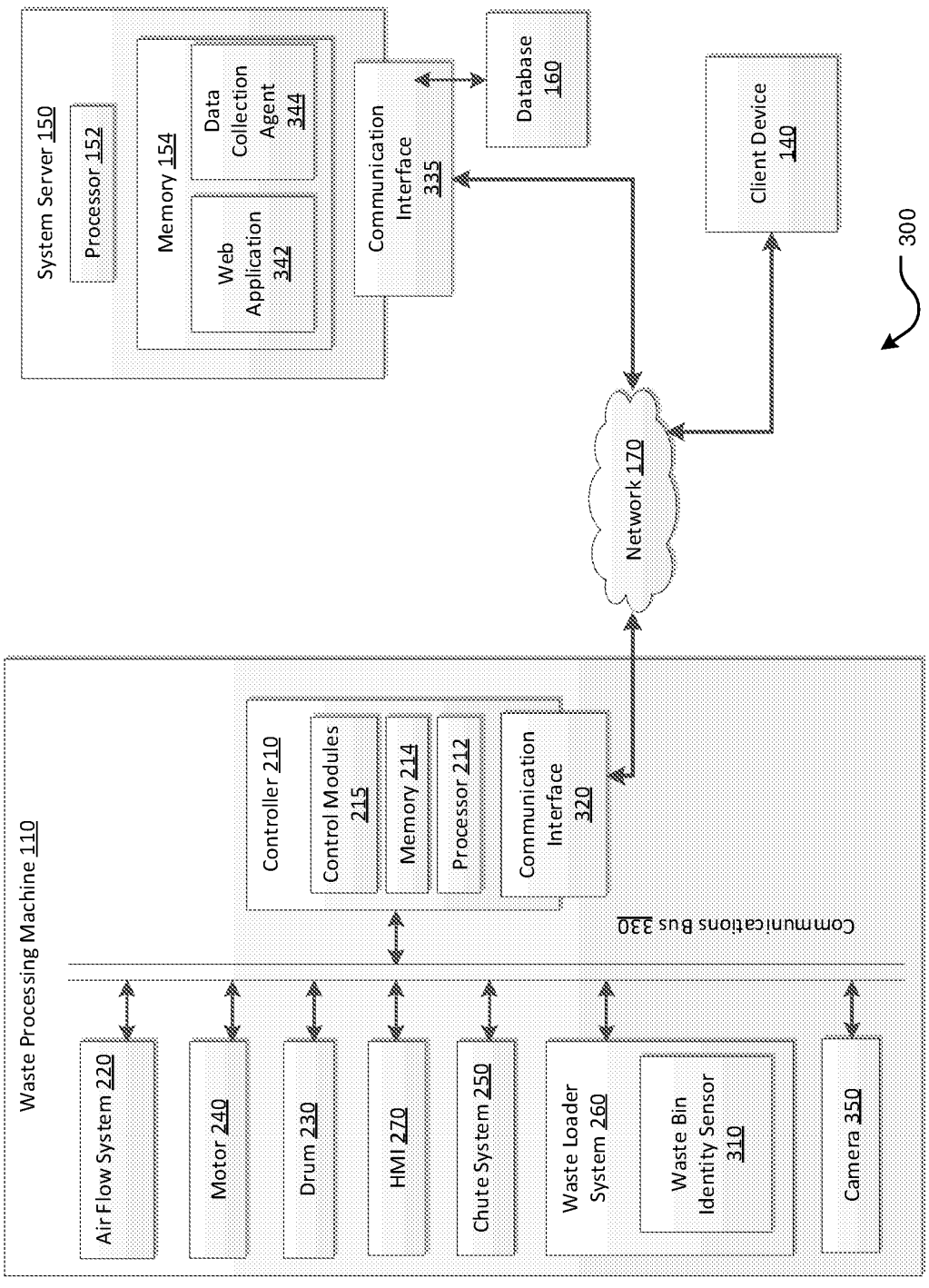
System Server 150
Processor 152
Memory 154
Data Collection Agent 344
Web Application 342
Communication Interface 335
Database 160
Client Device 140
300
Network 170
Waste Processing Machine 110
Controller 210
Control Modules 215
Memory 214
Processor 212
Communication Interface 320
Communications Bus 330
Air Flow System 220
Motor 240
Drum 230
HMI 270
Chute System 250
Waste Loader System 260
Waste Bin Identity Sensor 310
Camera 350

Figure 3

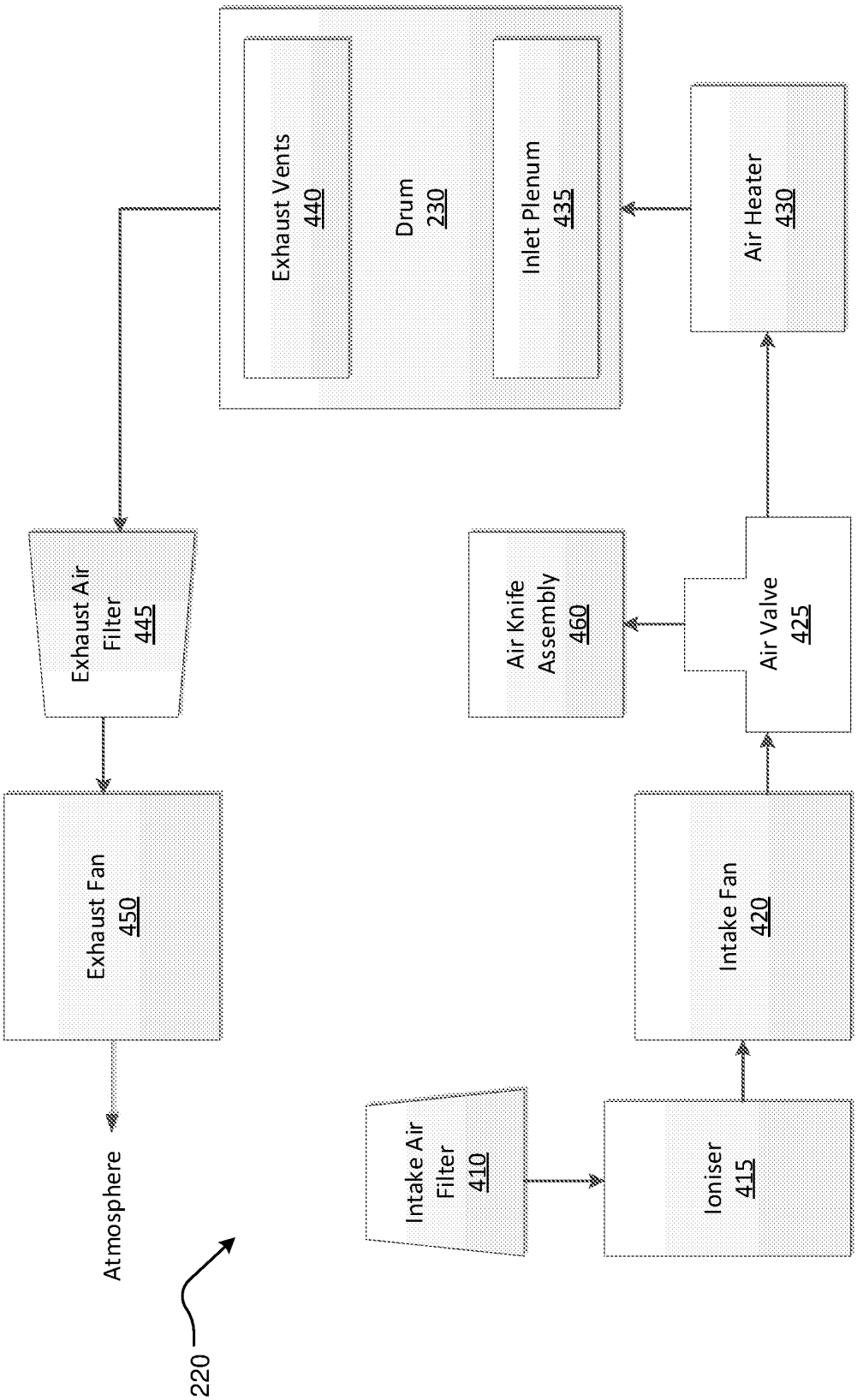
Exhaust Vents
440
Drum
230
Inlet Plenum
435
Air Heater
430
Exhaust Air
Filter
445
Air Knife
Assembly
460
Air Valve
425
Exhaust Fan
450
Intake Fan
420
Atmosphere
Intake Air
Filter
410
Ioniser
415
220

Figure 4

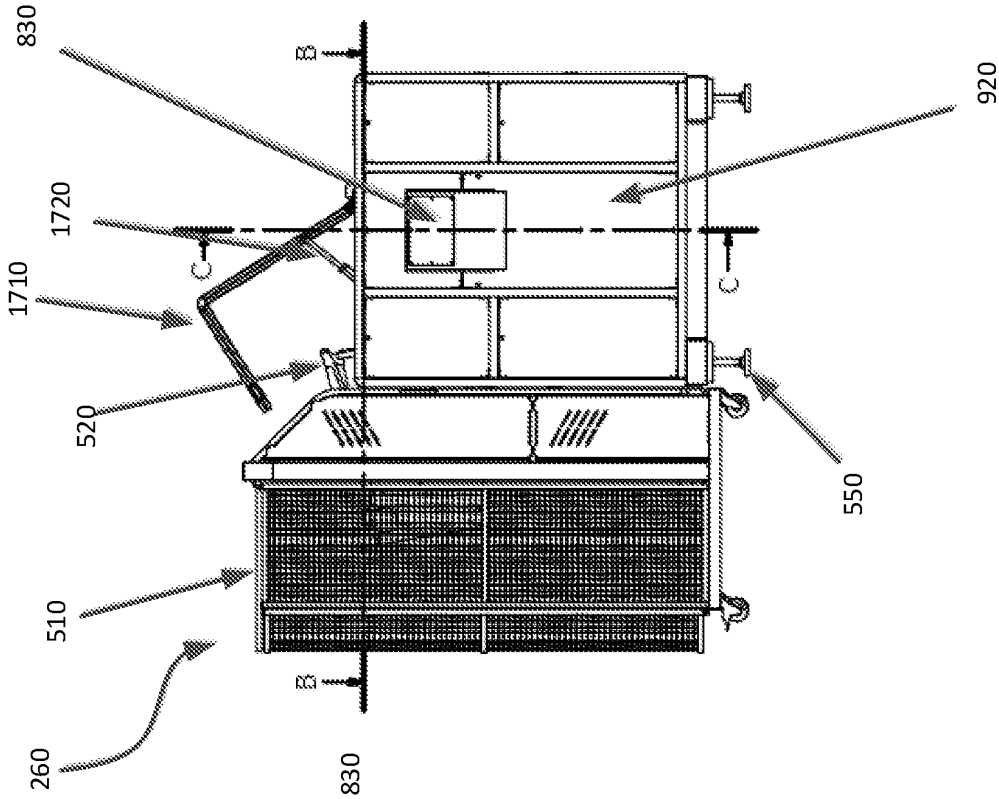

Figure 5B

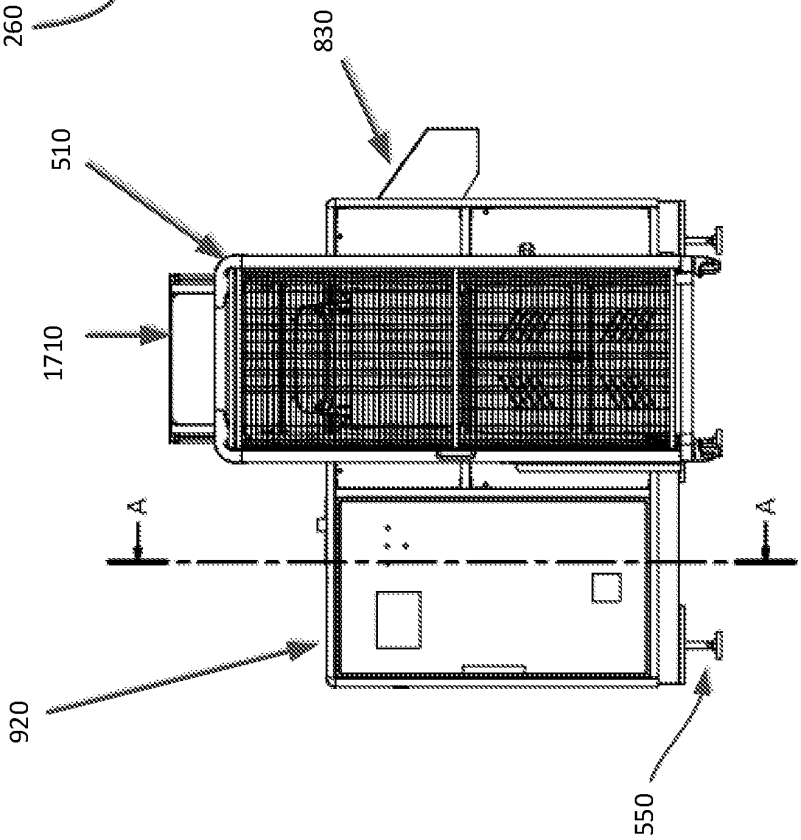

Figure 5A

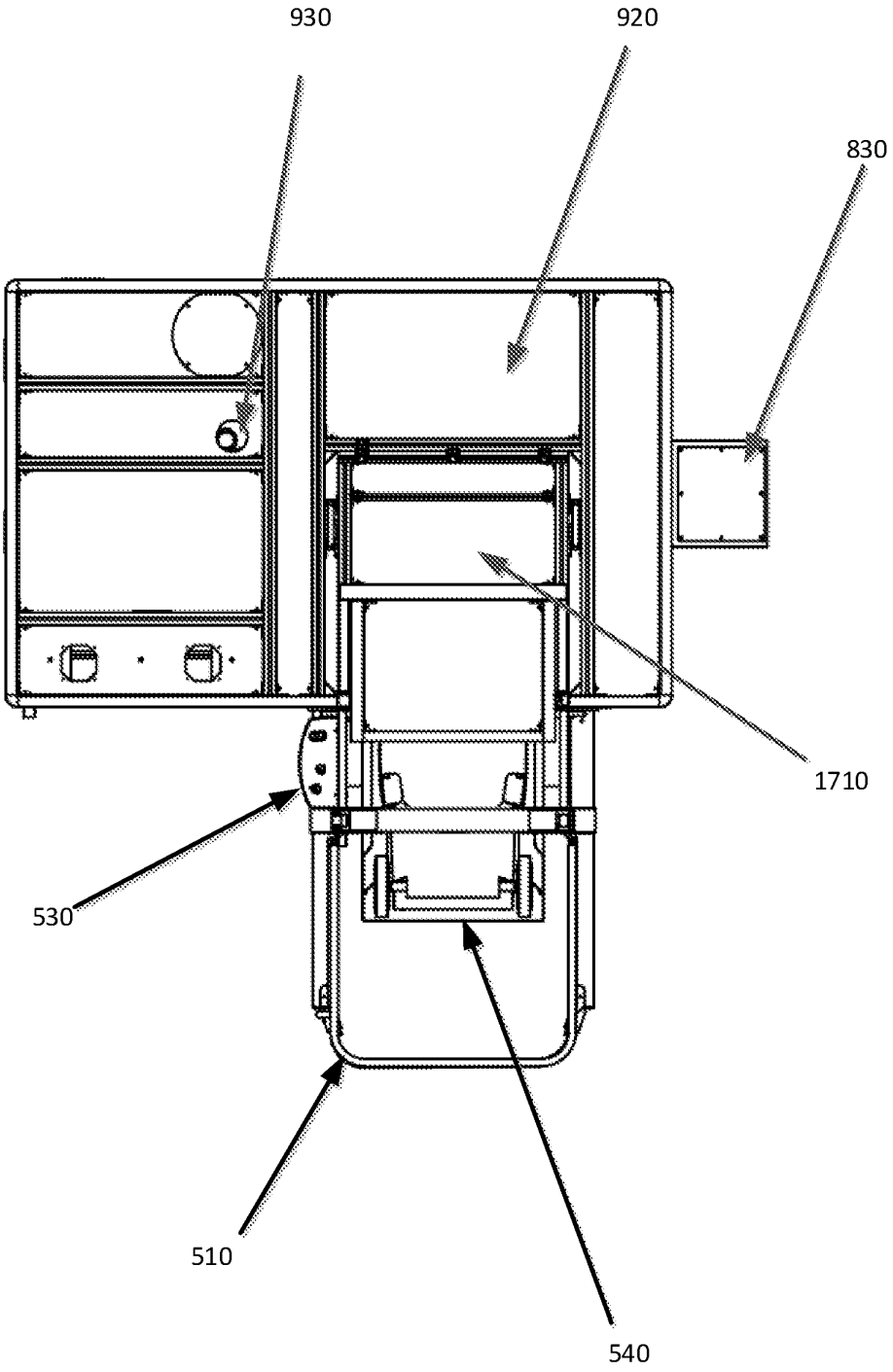

Figure 5C

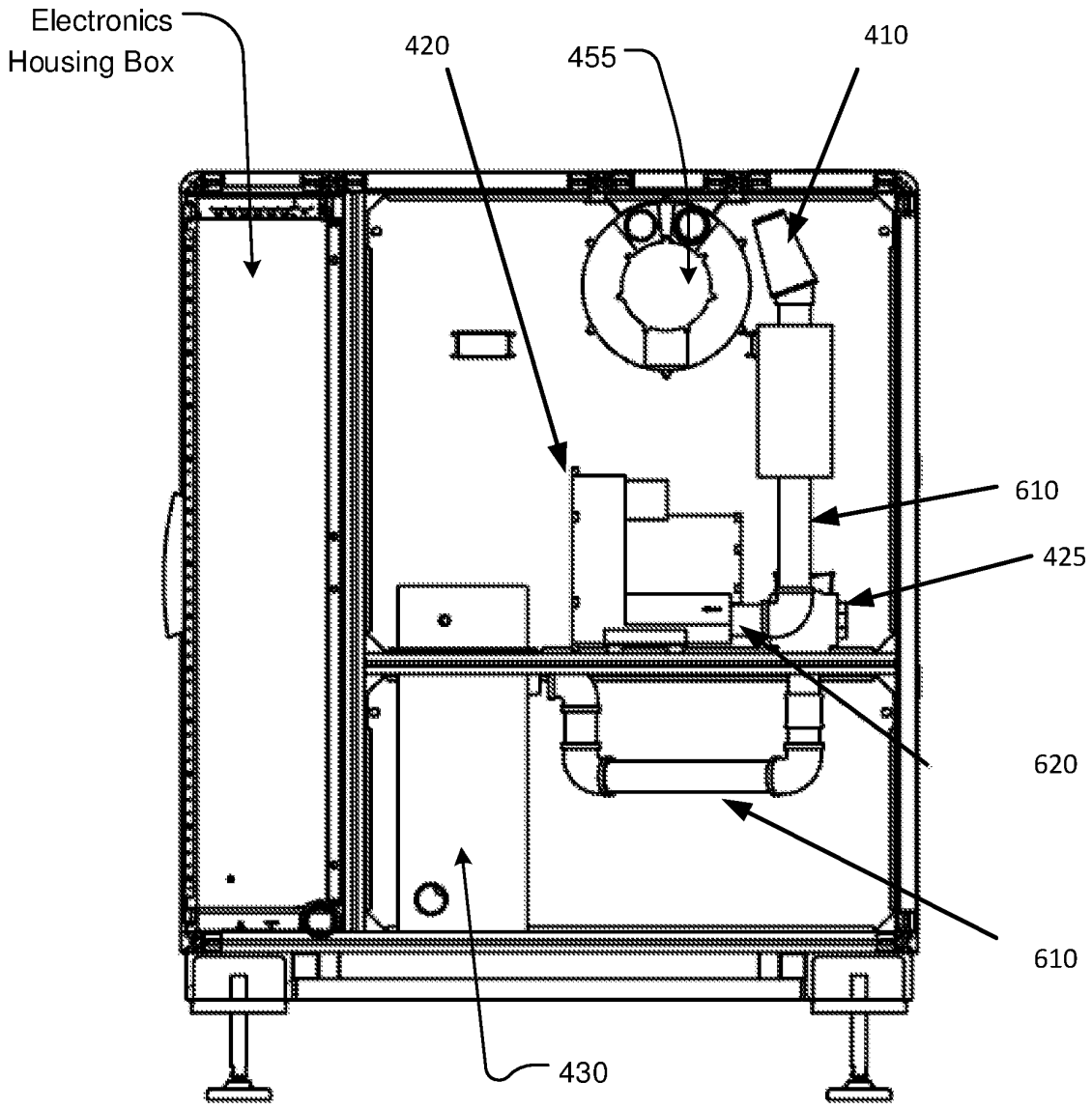

Figure 6

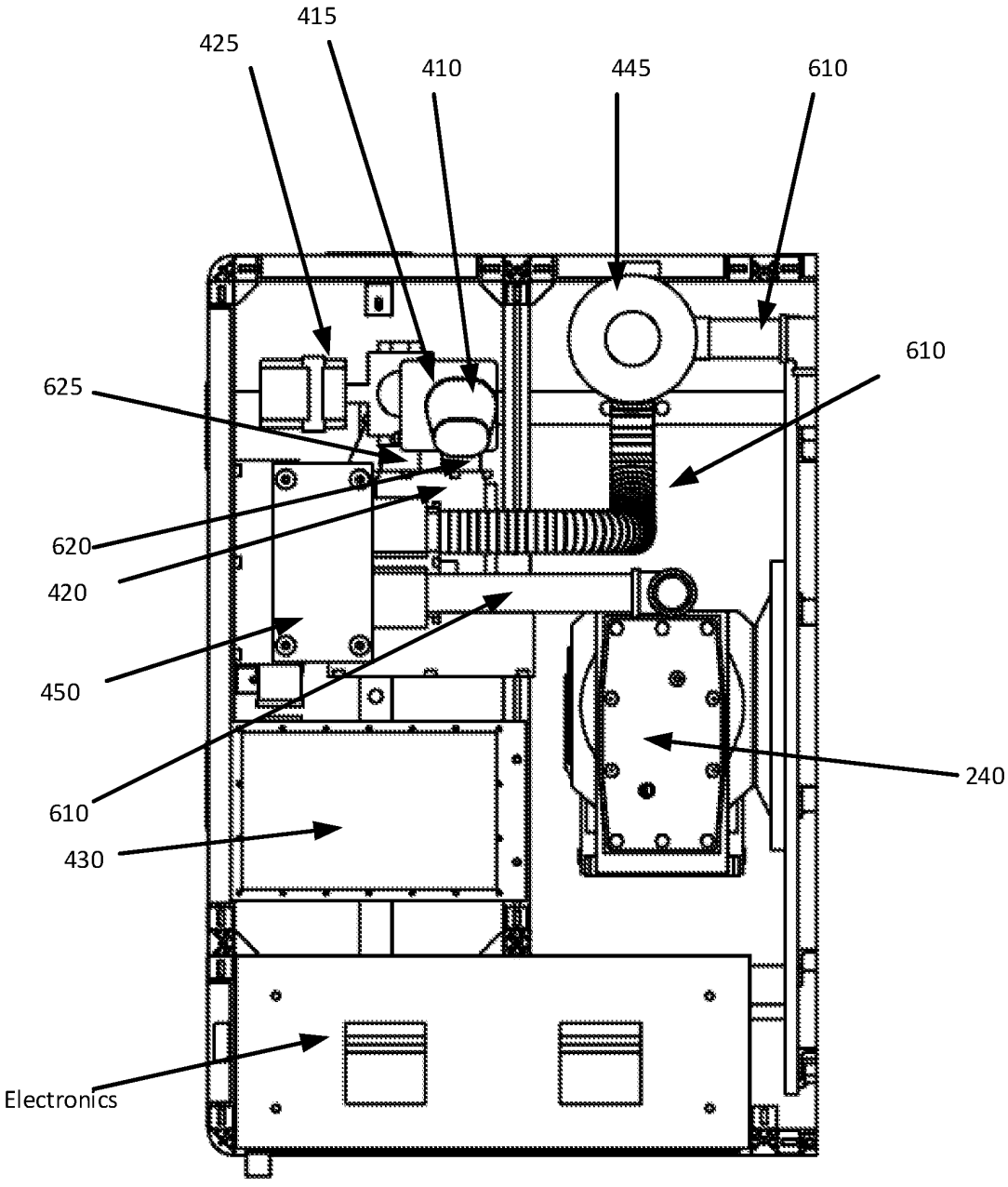
415
425
410
445
610
610
625
620
420
450
610
430
240
Electronics

Figure 7

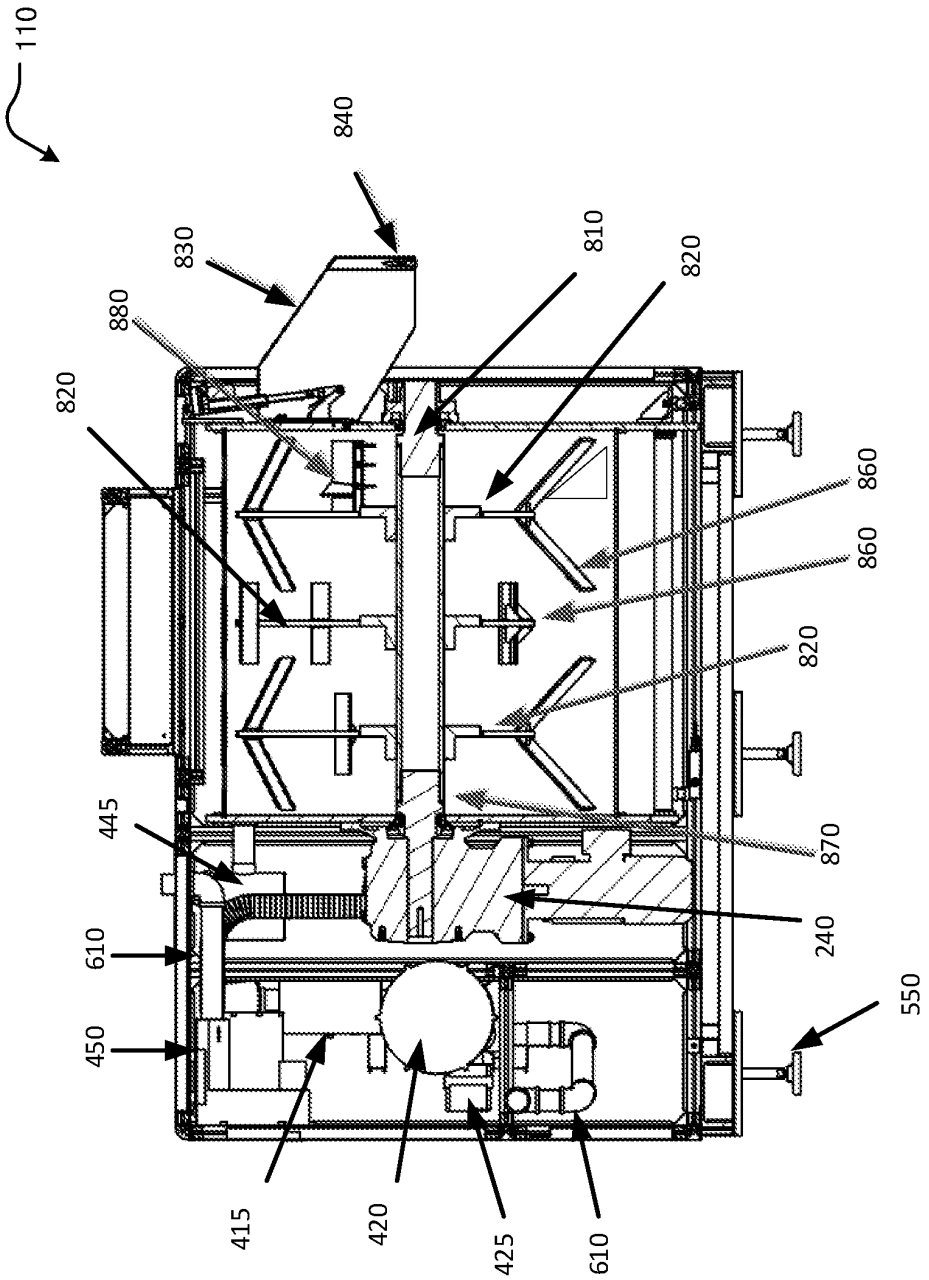
110
840
830
810
820
880
820
860
860
820
870
445
240
610
550
450
415
420
425
610

Figure 8

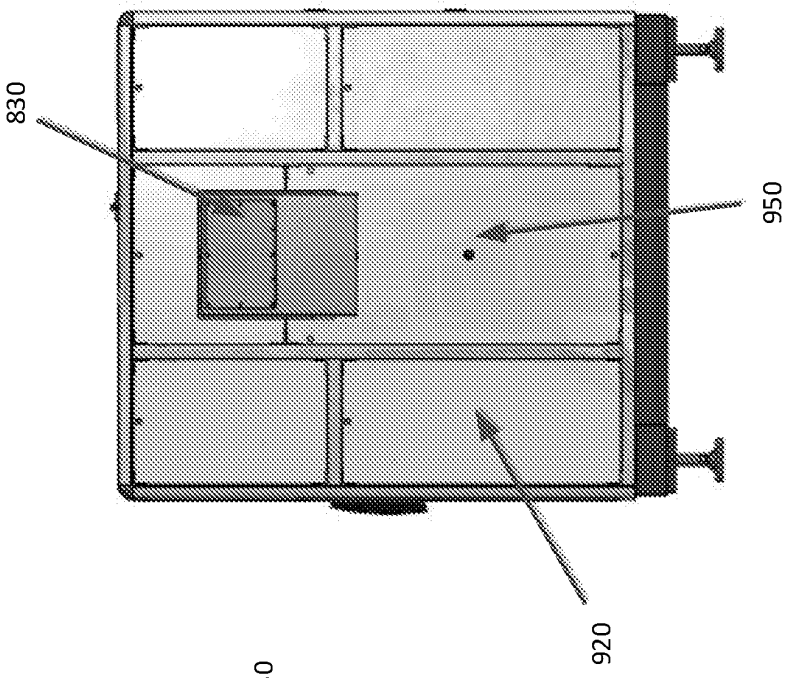

Figure 9B

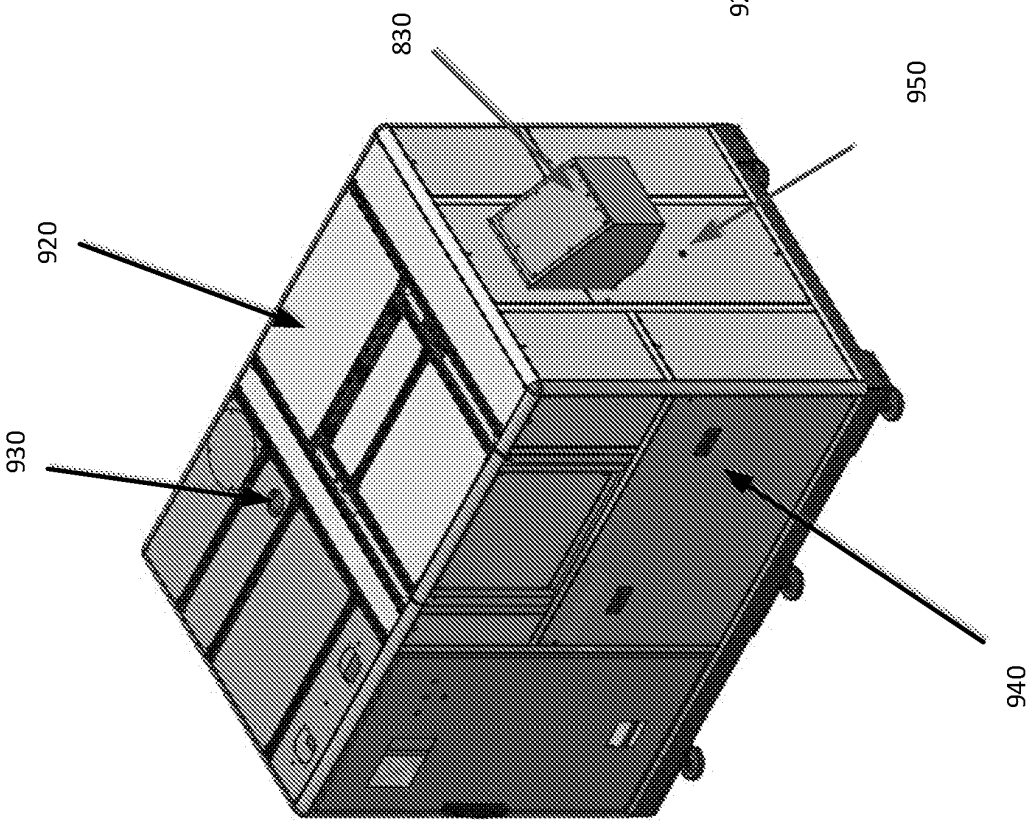

Figure 9A

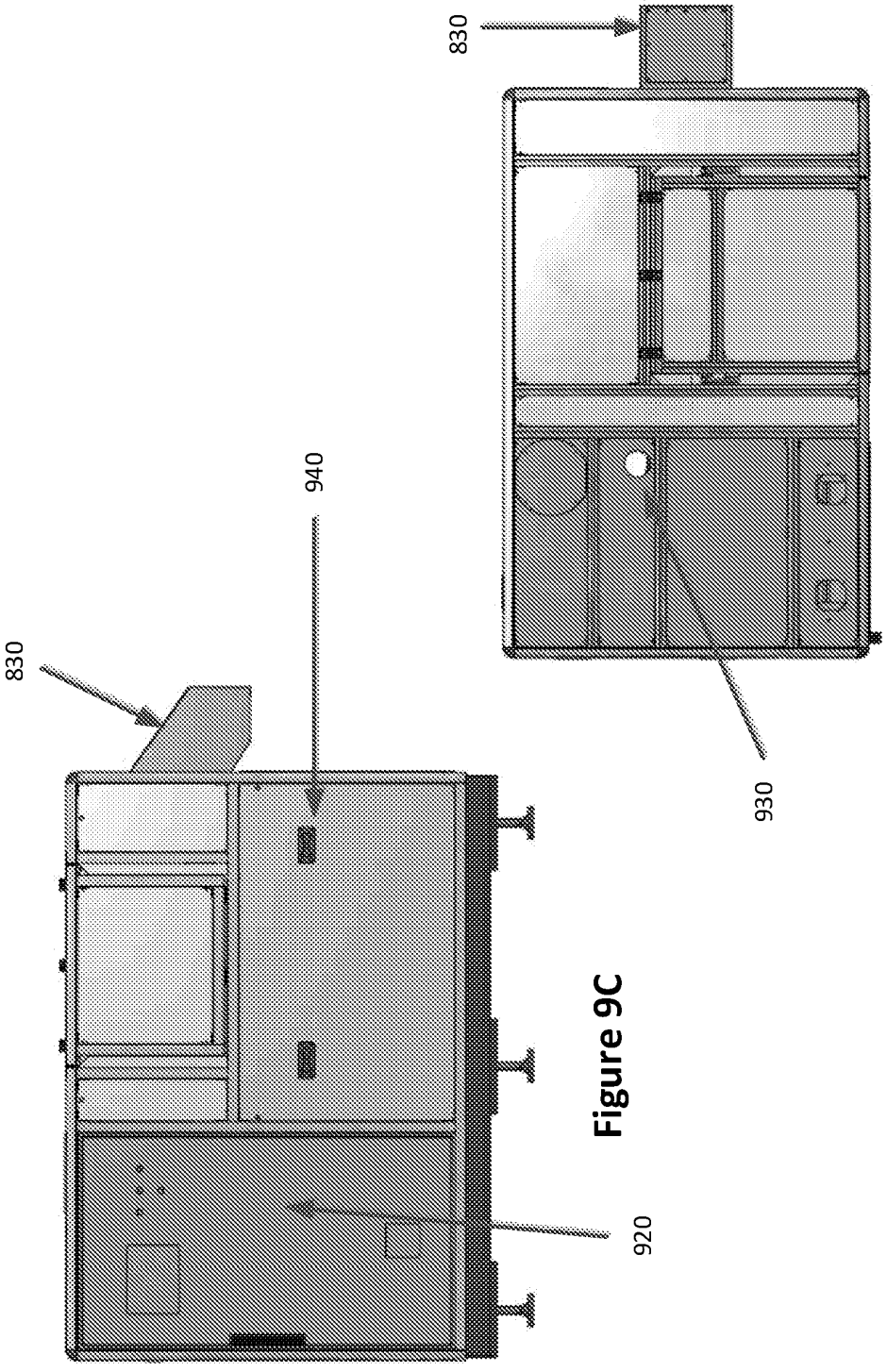

Figure 9C

Figure 9D

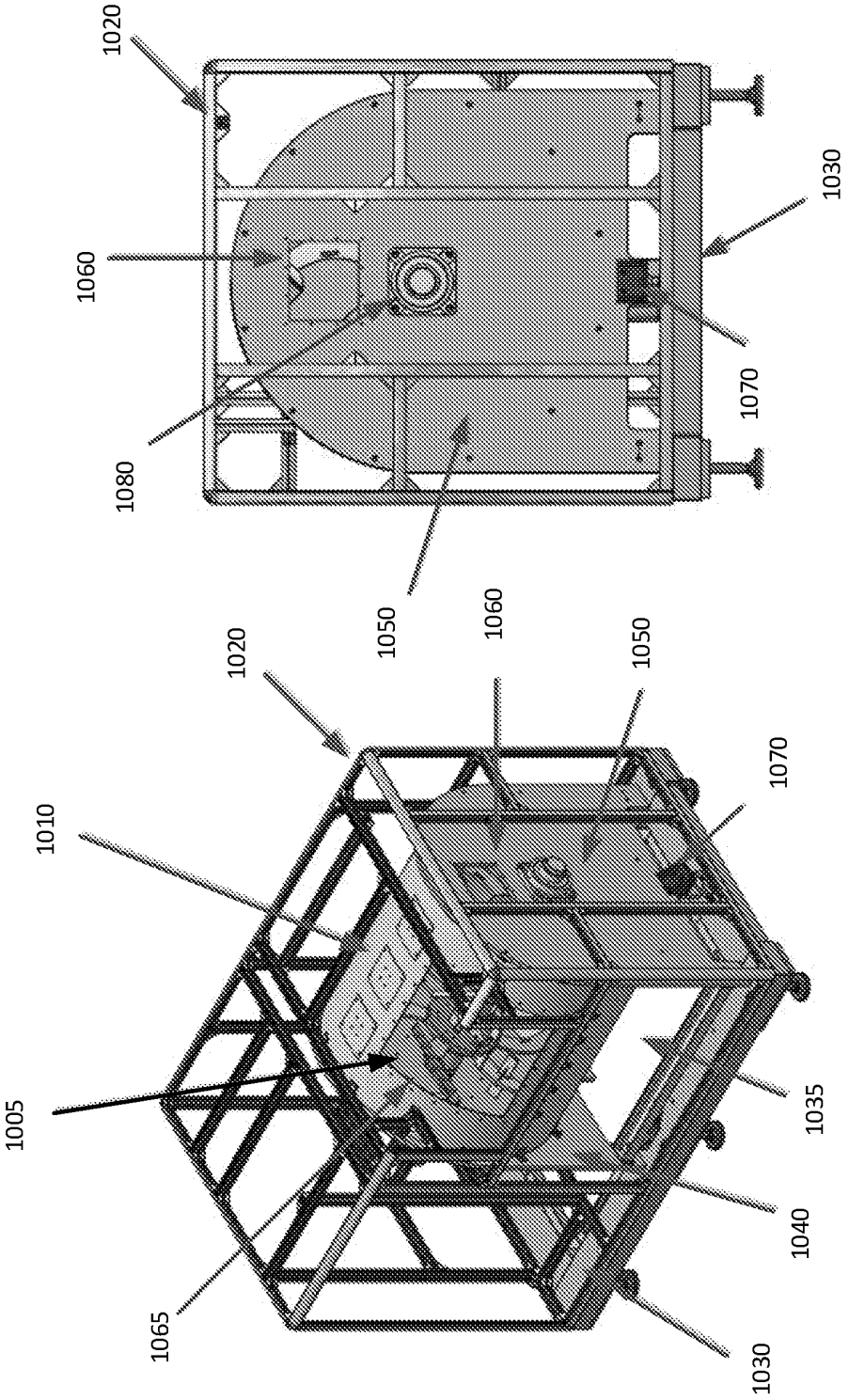

Figure 10B

Figure 10A

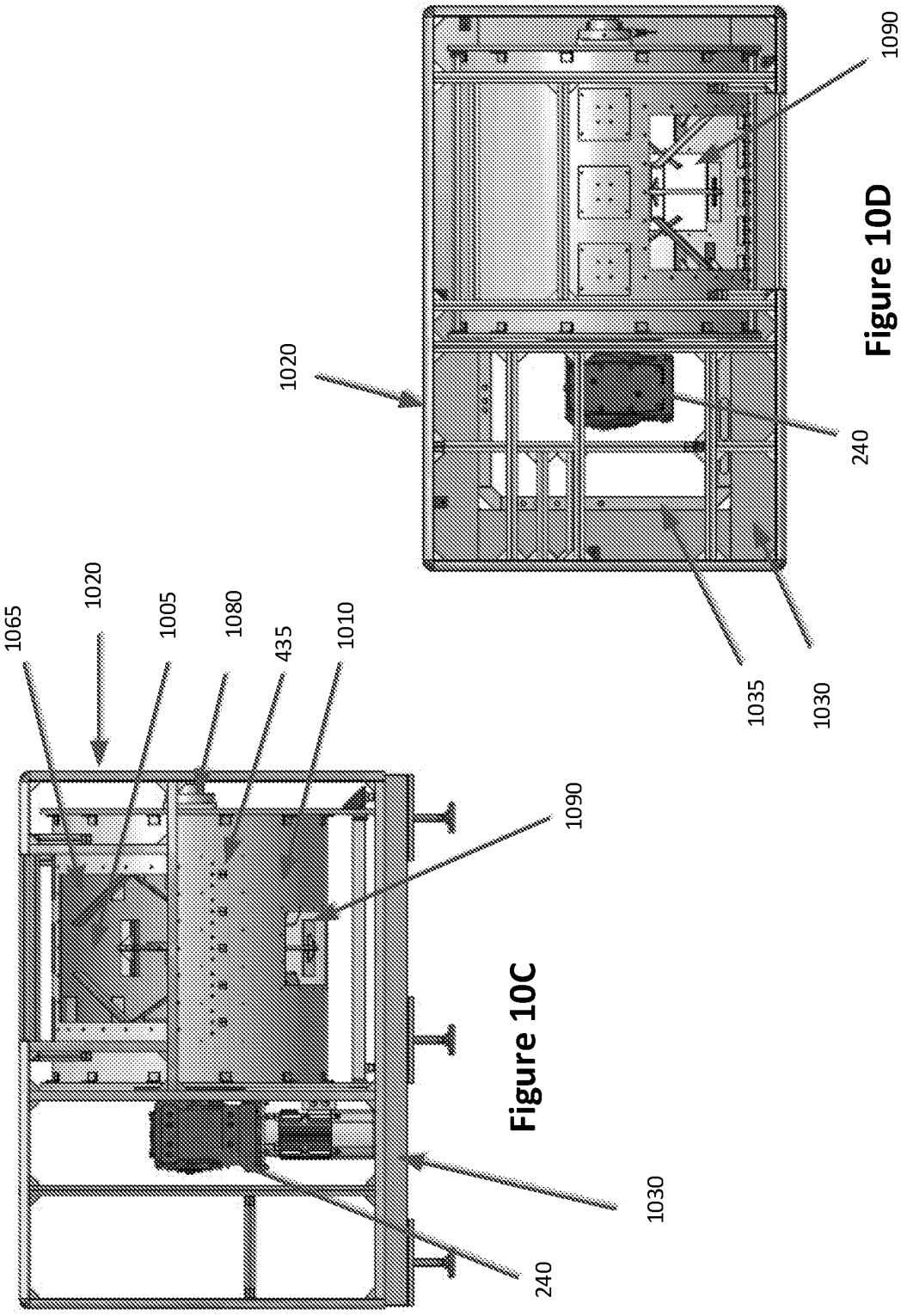

Figure 10C

Figure 10D

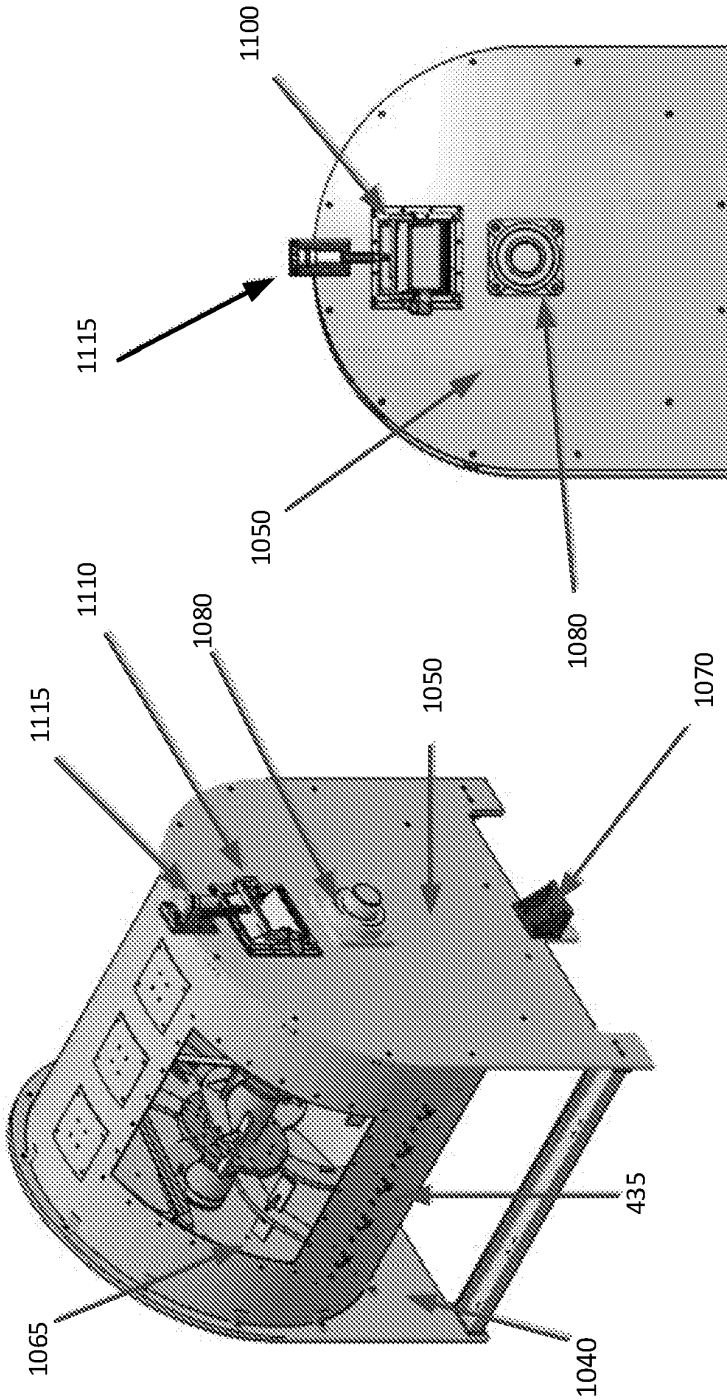

Figure 11B

Figure 11A

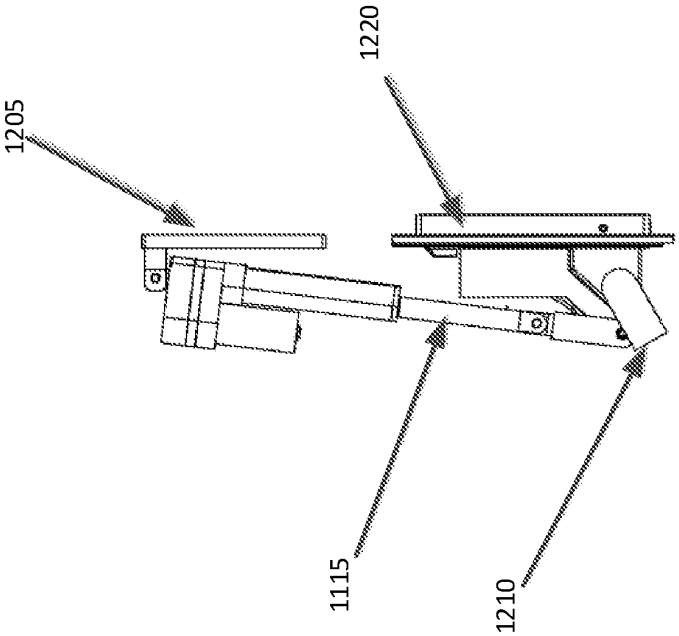

Figure 12B

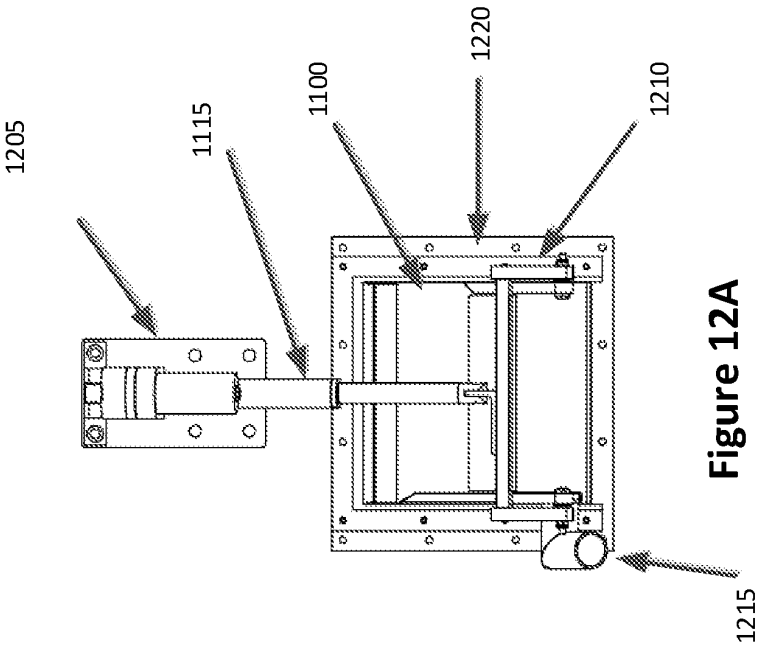

Figure 12A

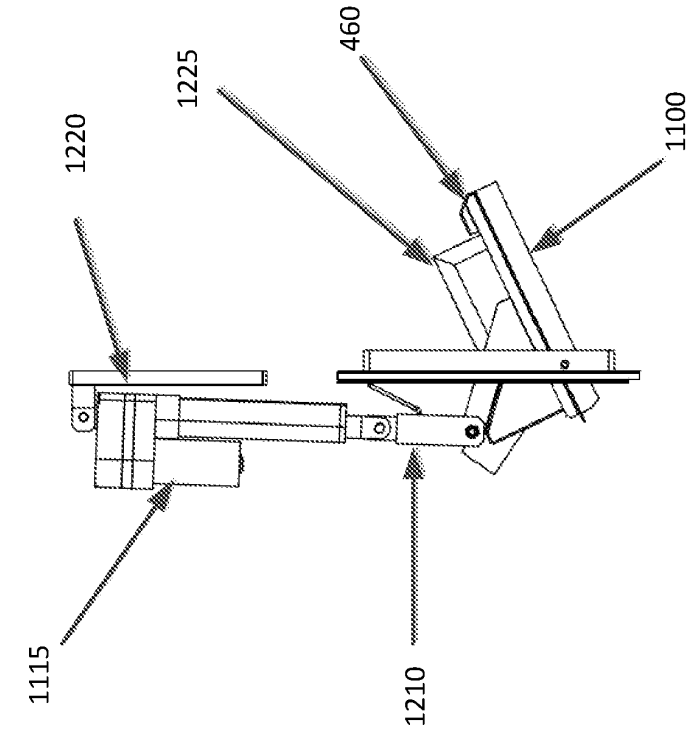

Figure 13B

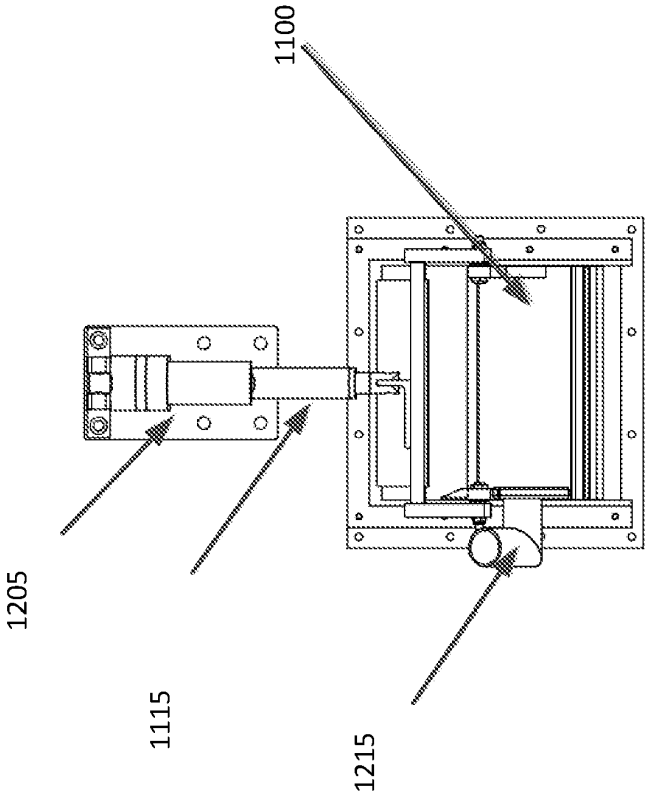

Figure 13A

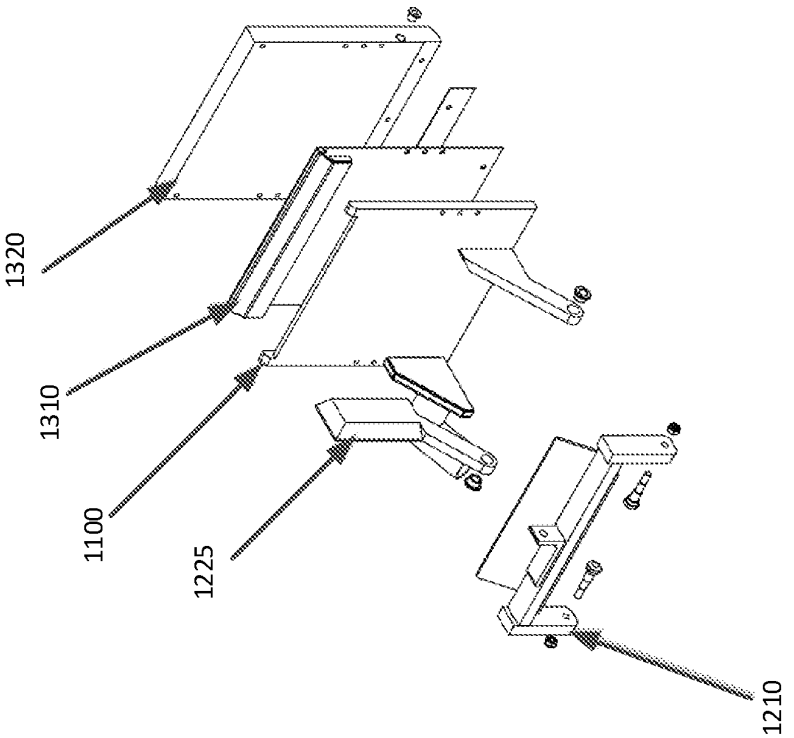

Figure 13D

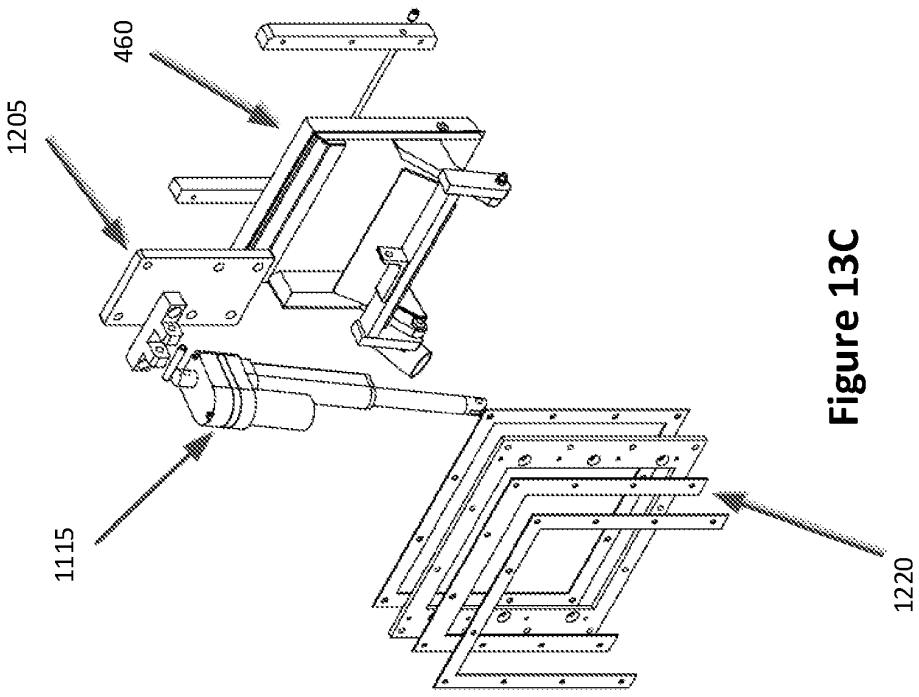

Figure 13C

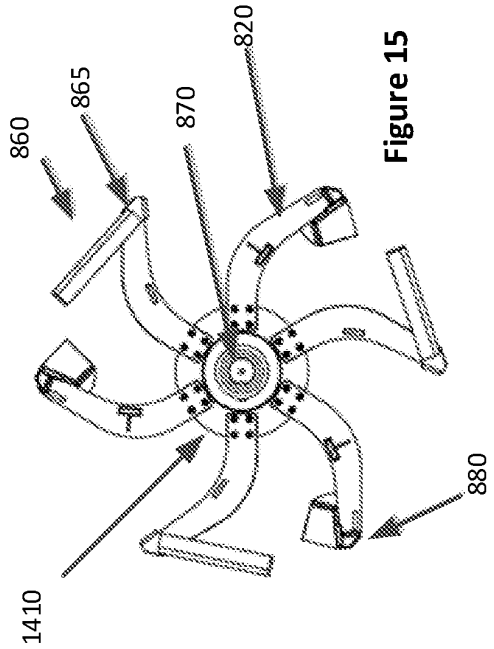

Figure 15

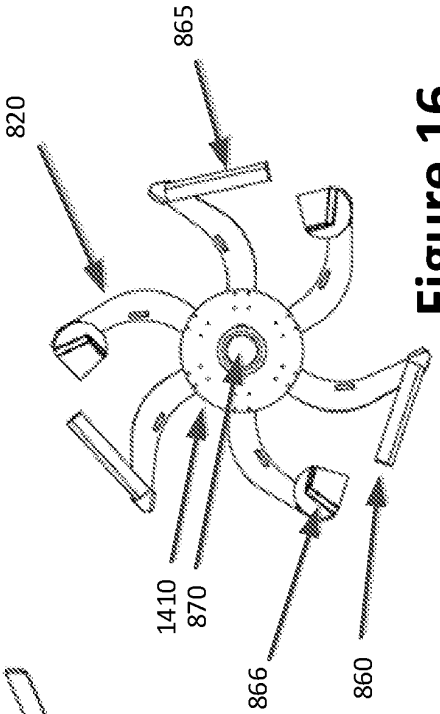

Figure 16

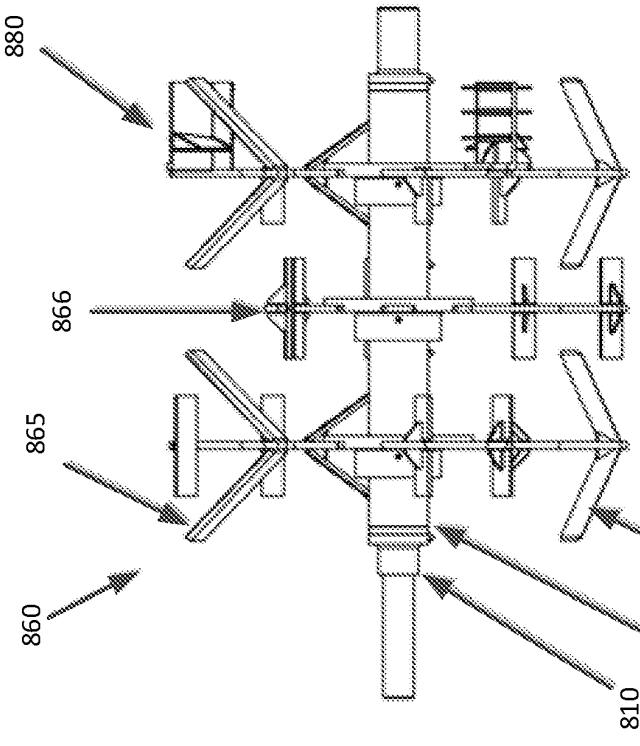

Figure 14



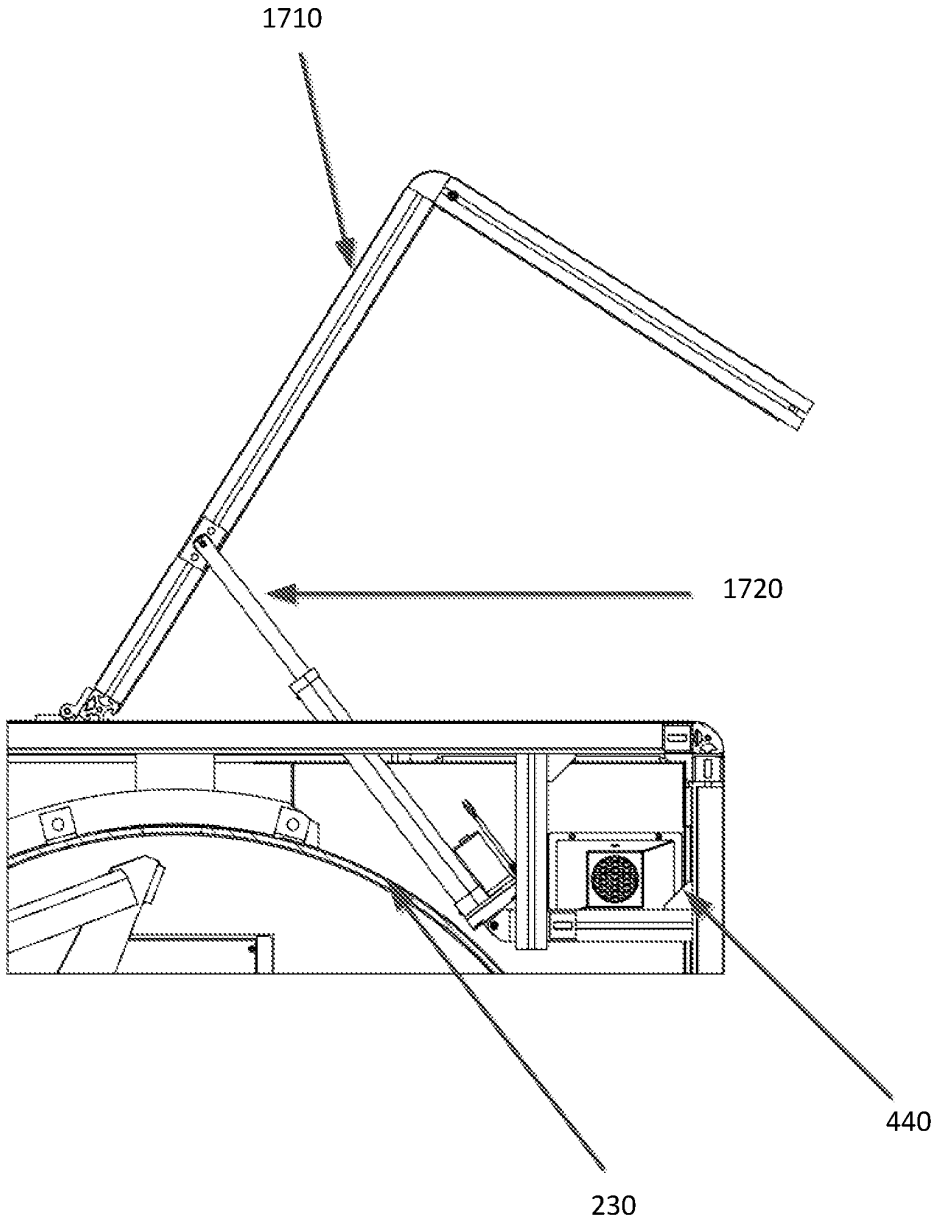

Figure 17

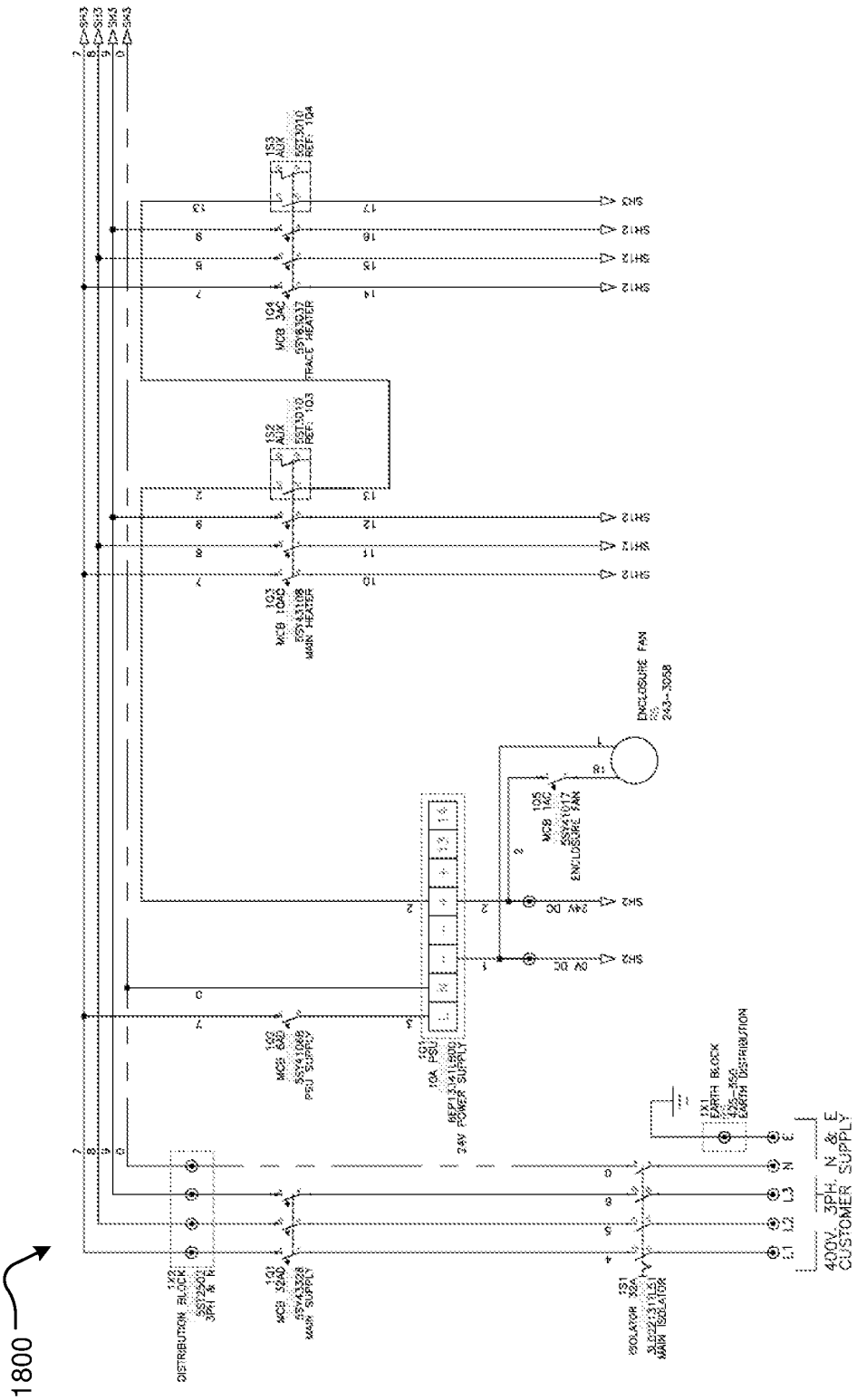

Figure 18

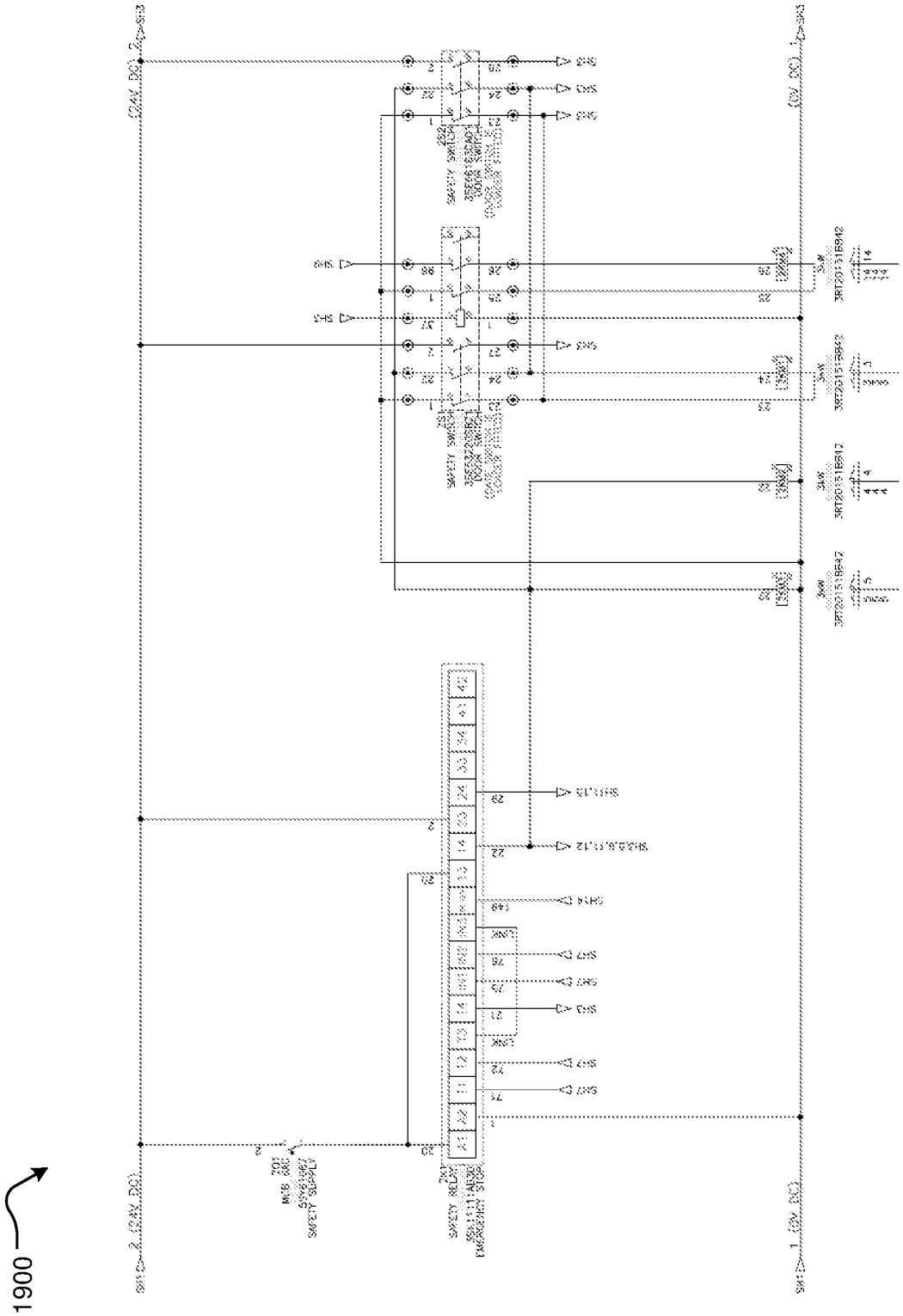

Figure 19

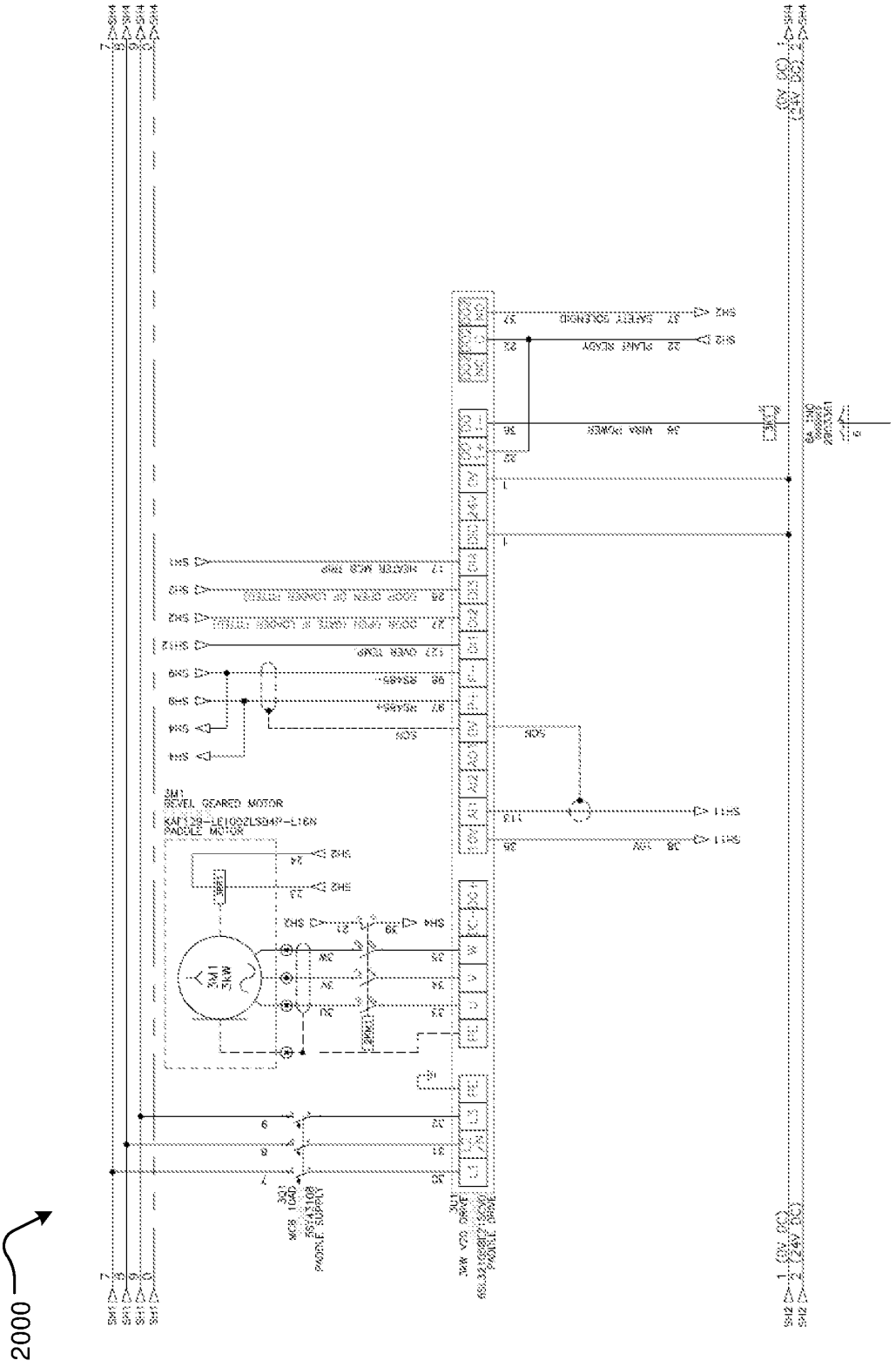

Figure 20

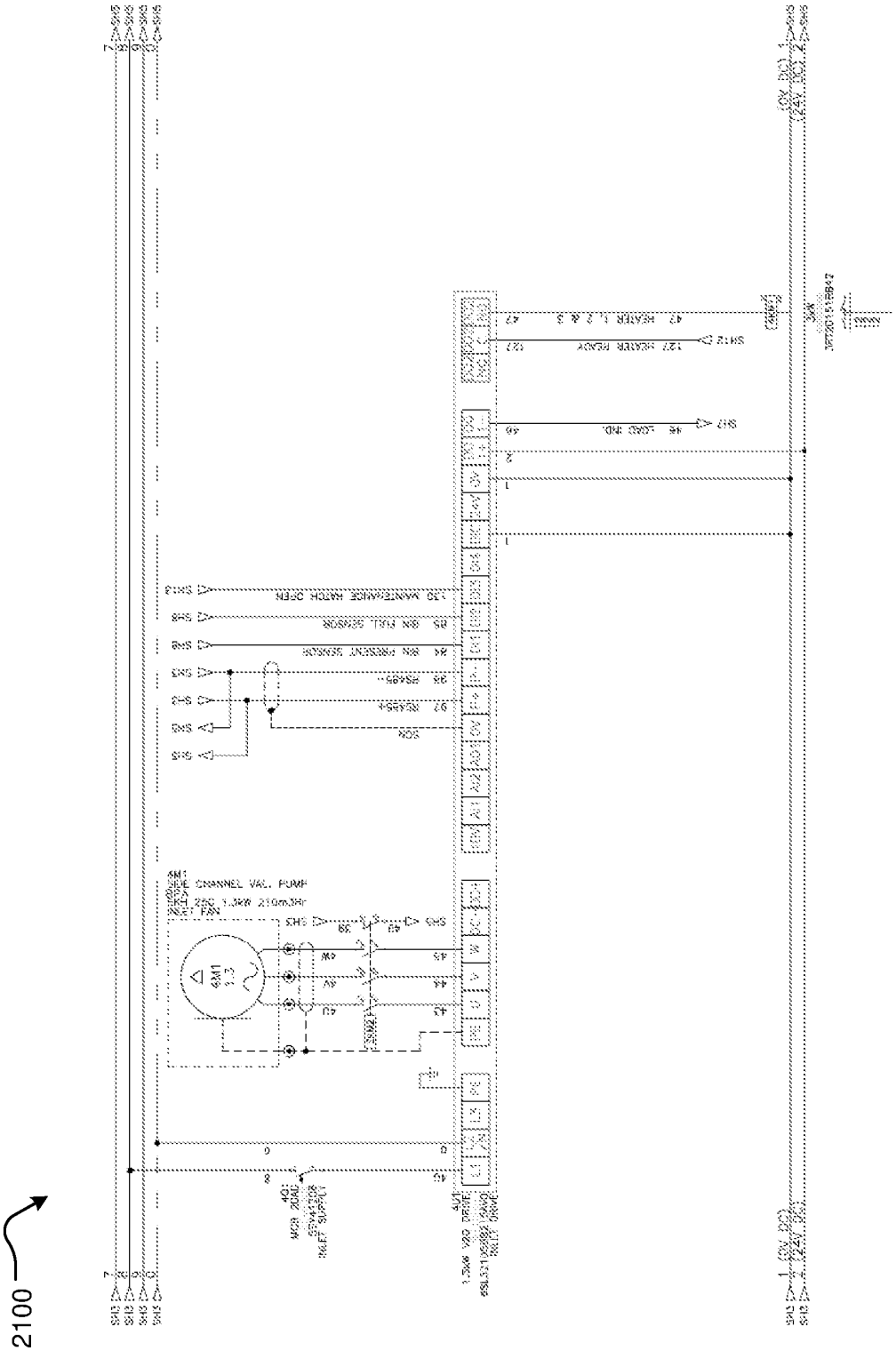

Figure 21

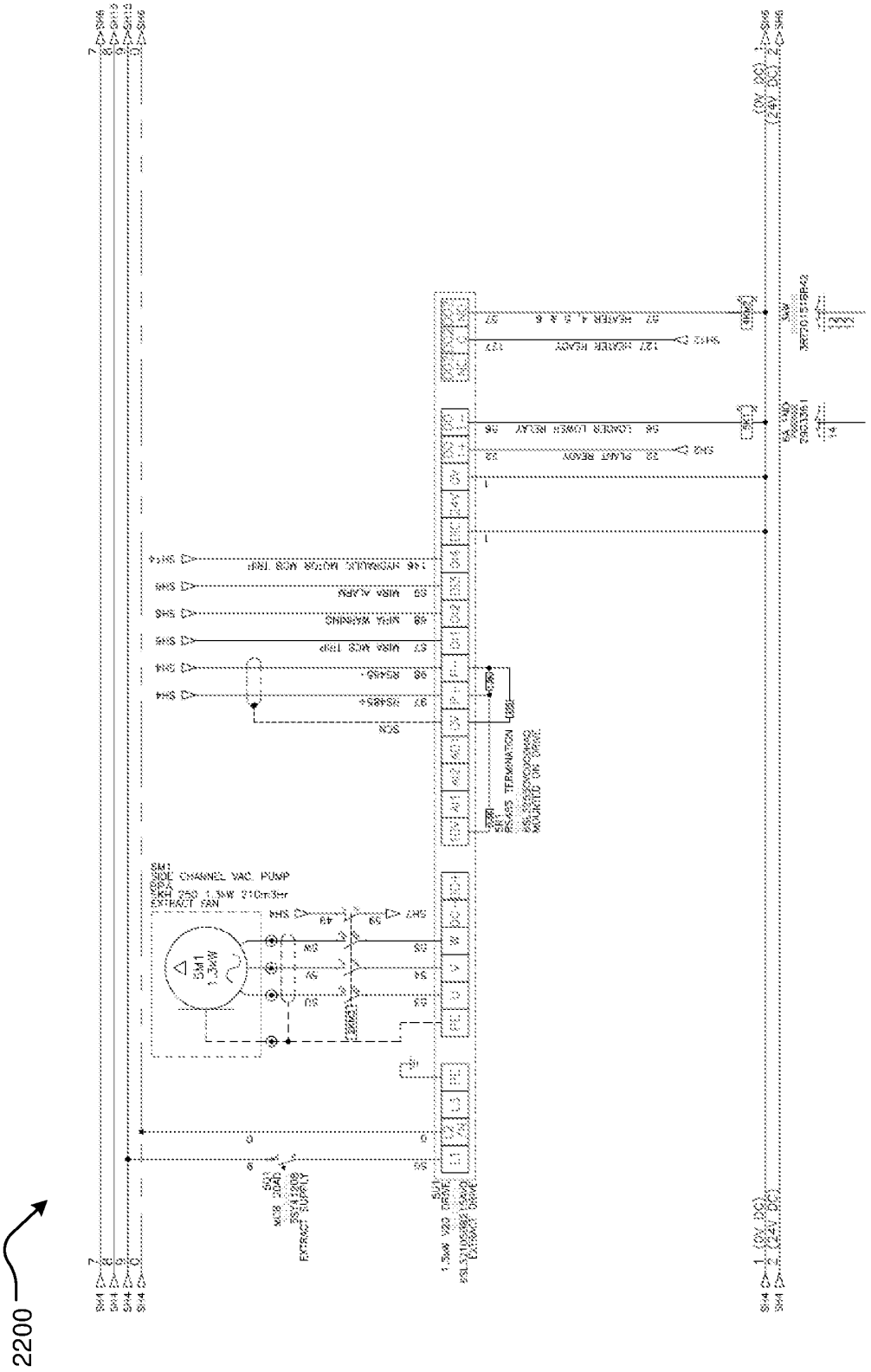

Figure 22

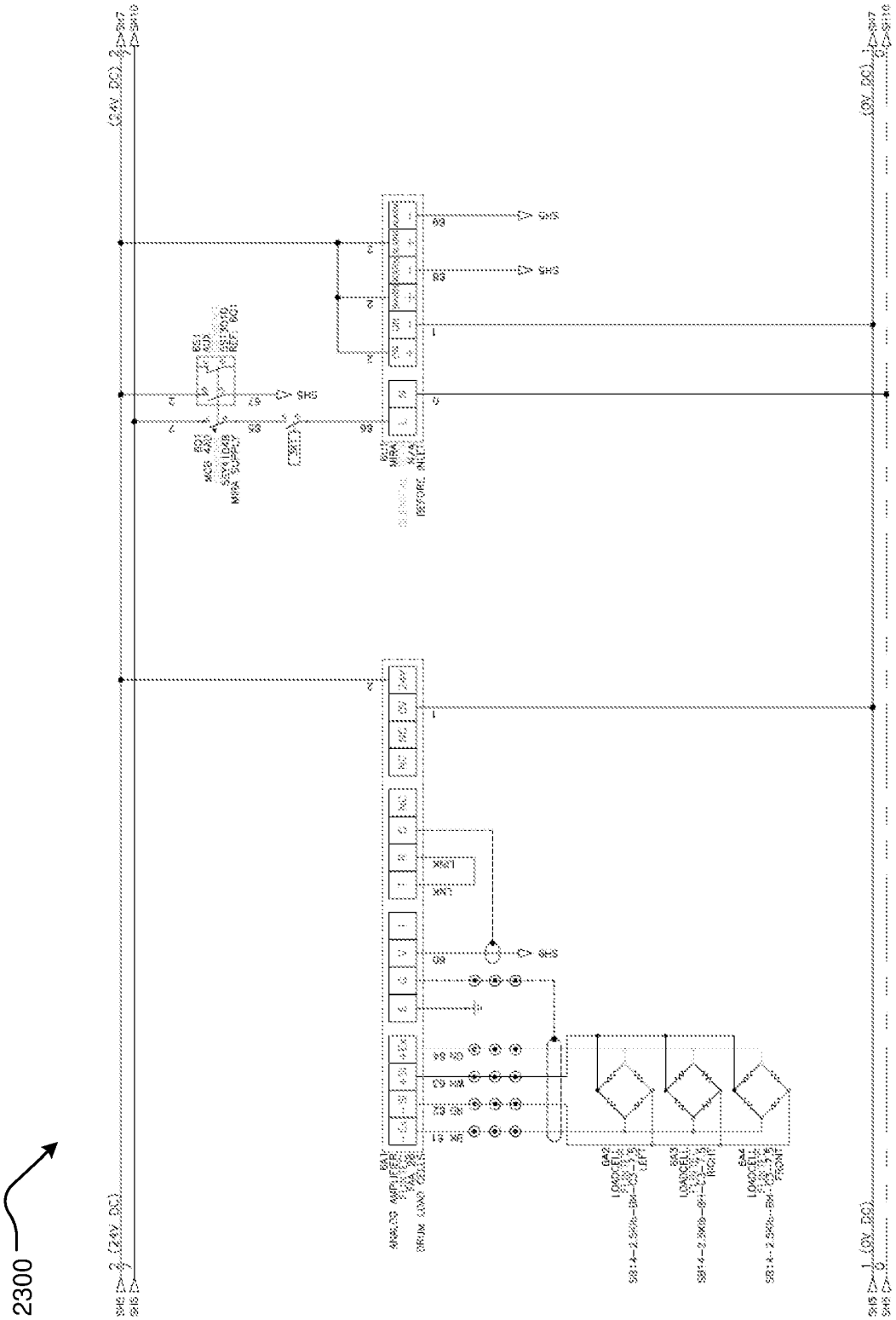

Figure 23

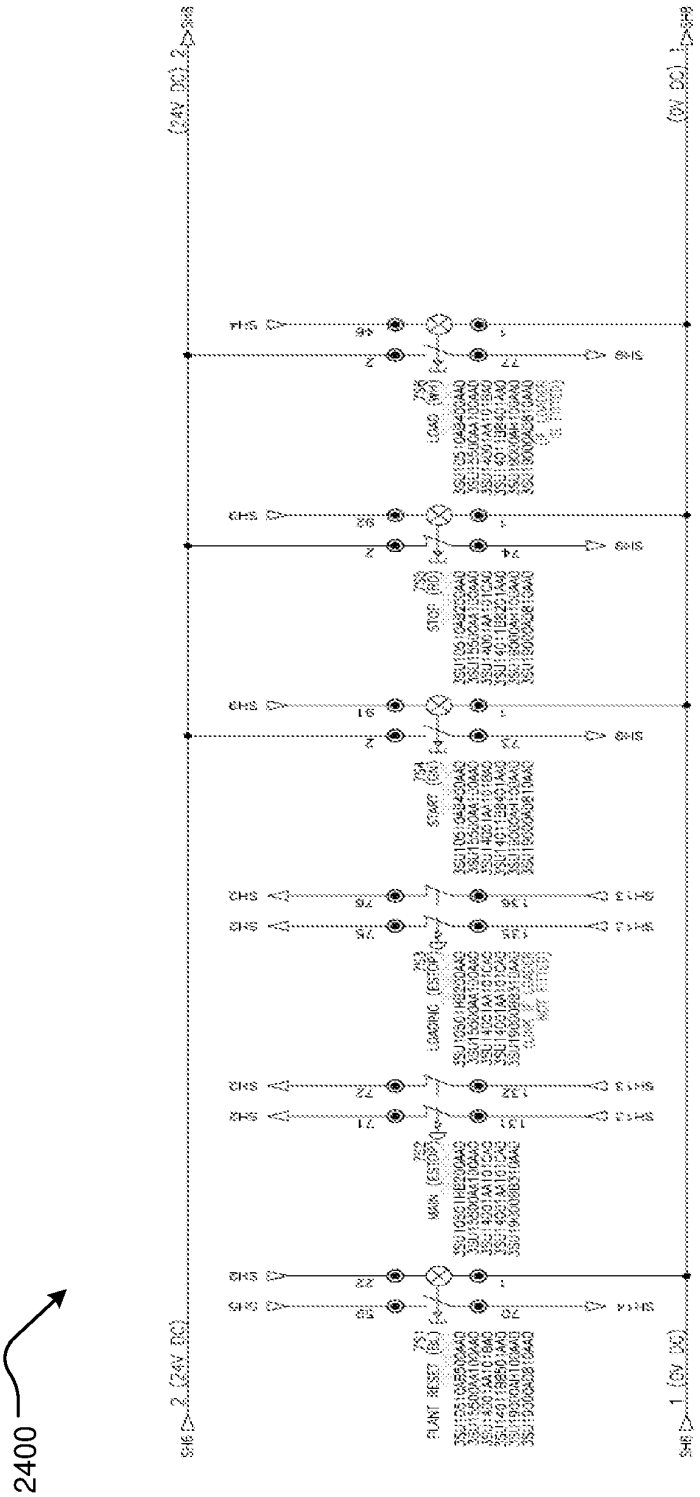

Figure 24

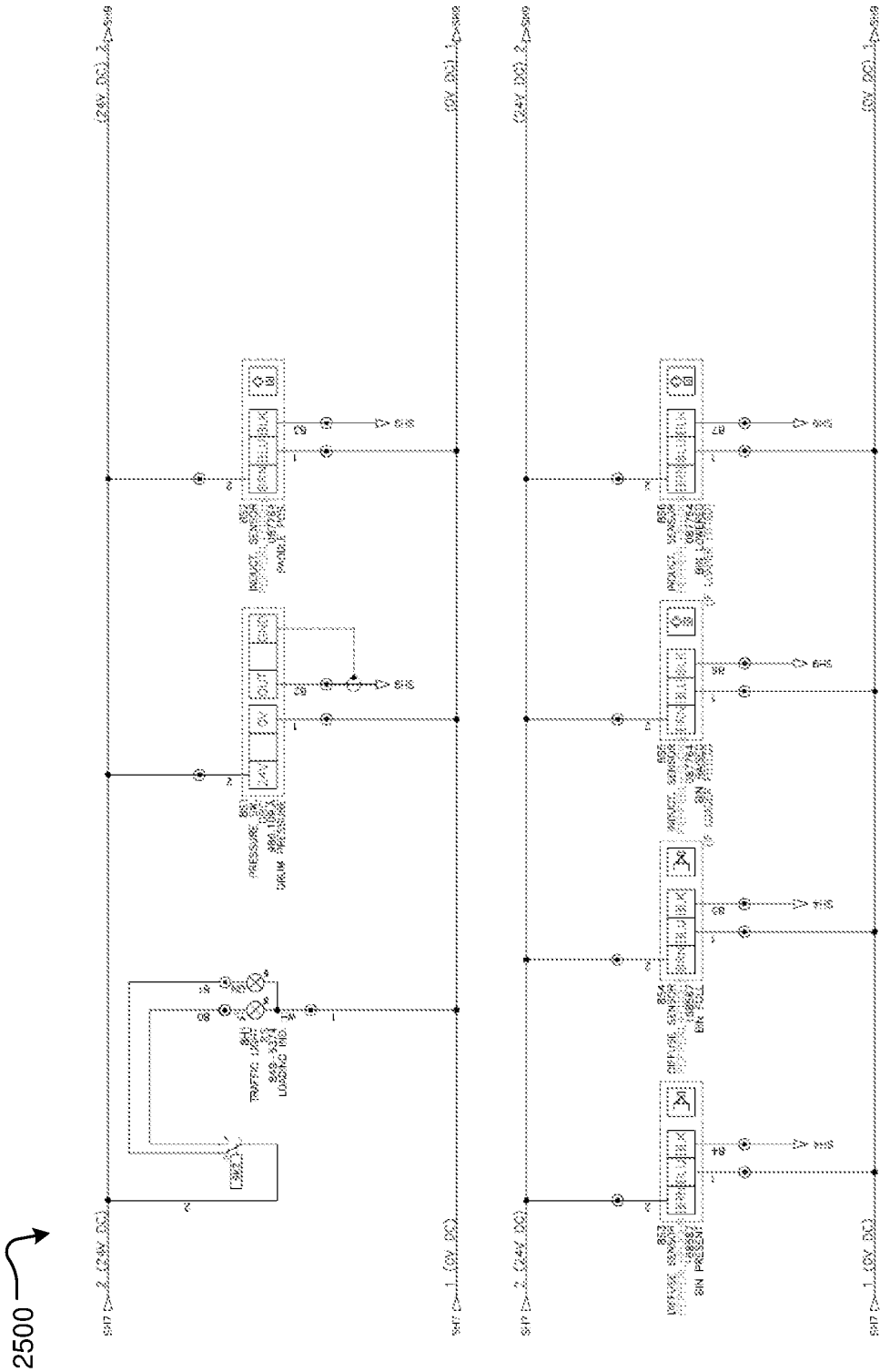

Figure 25

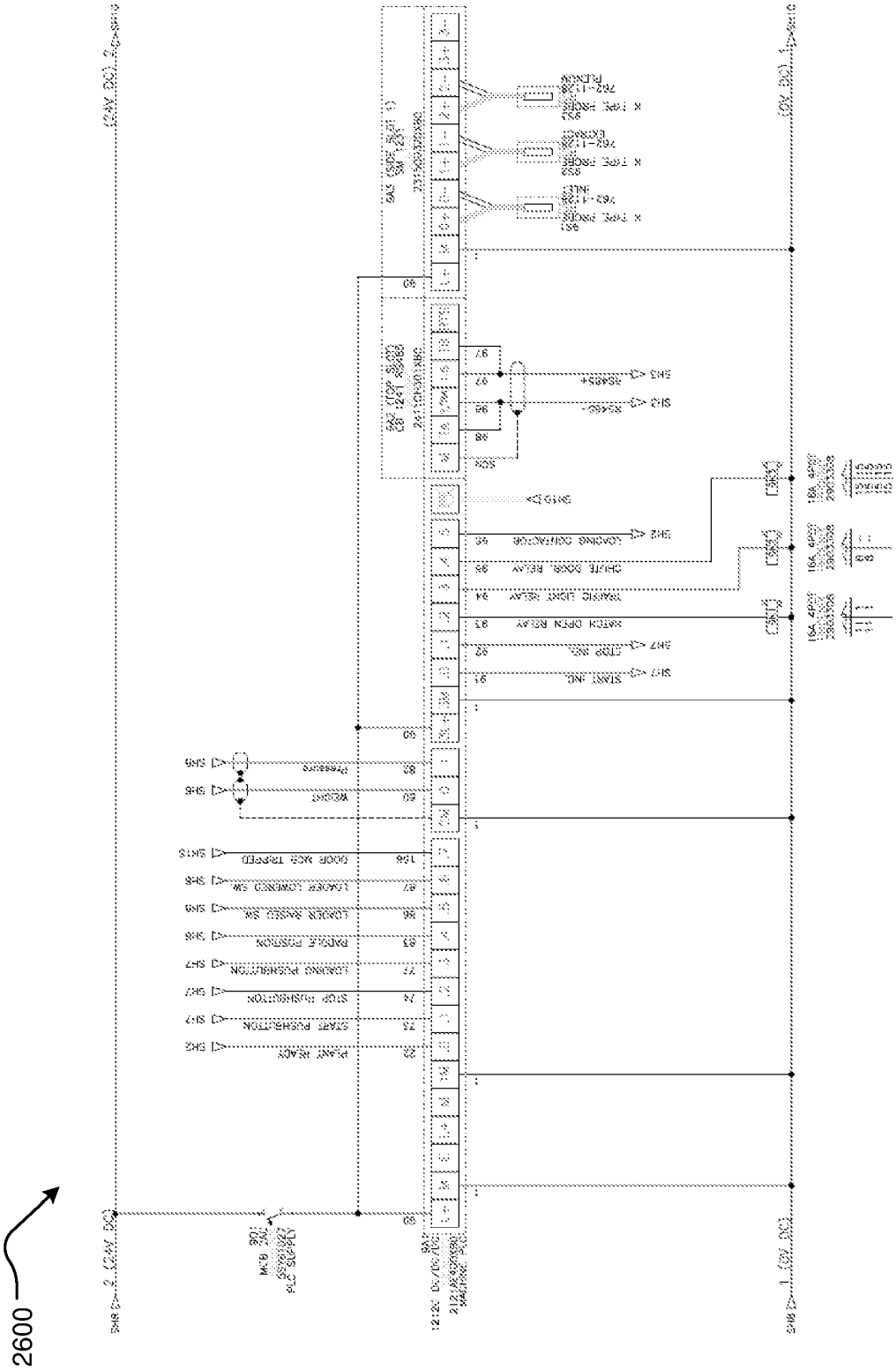

Figure 26

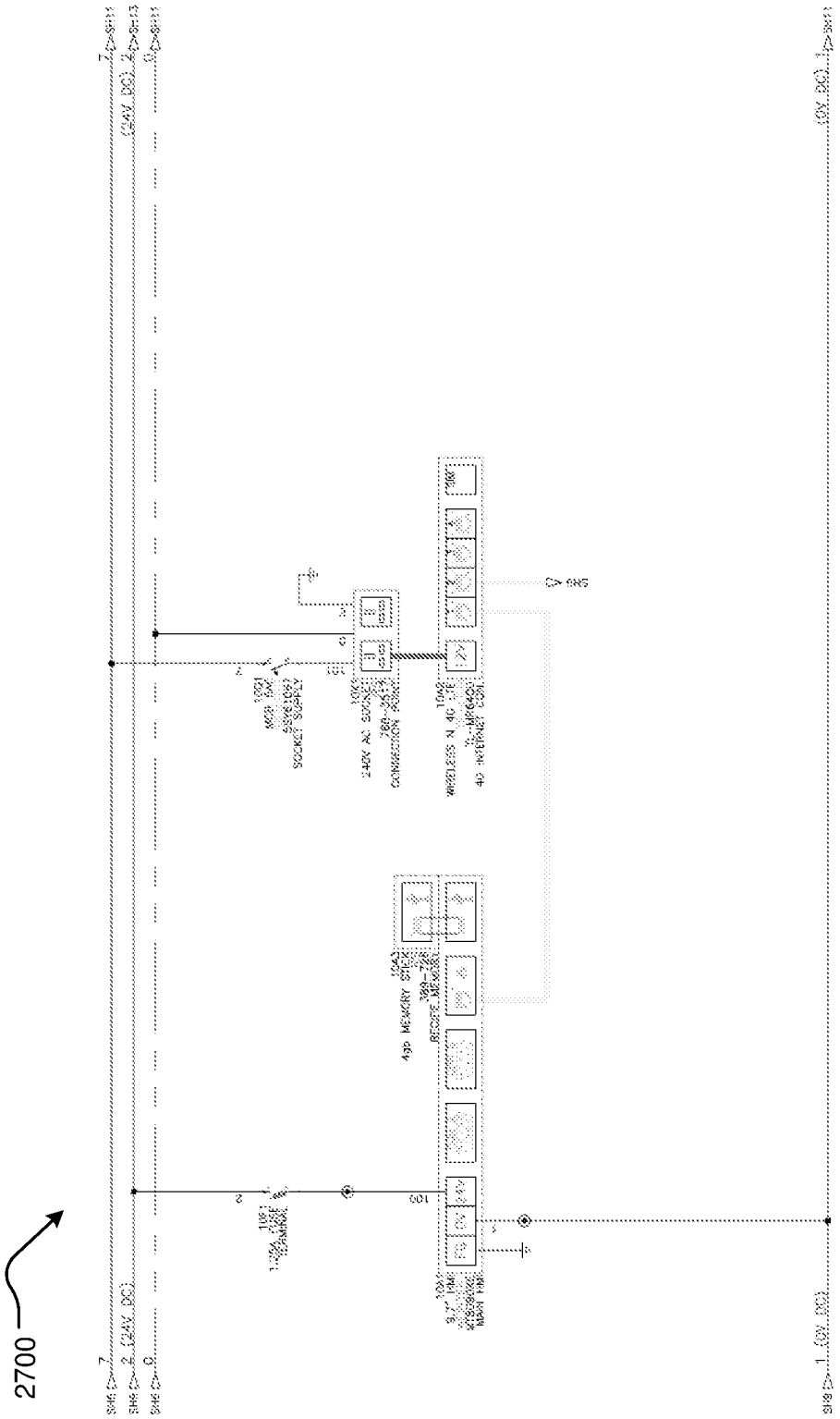

Figure 27

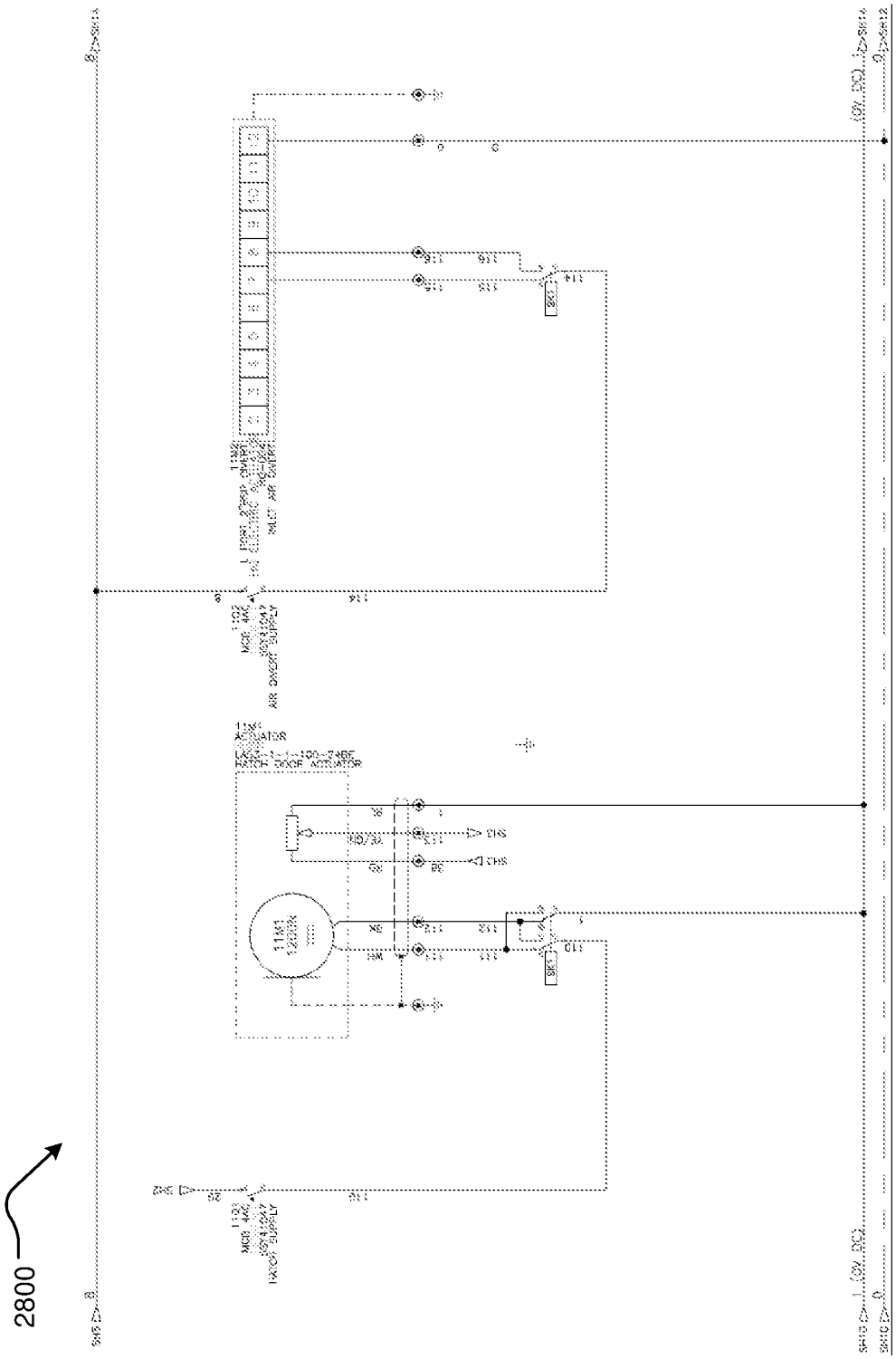

Figure 28

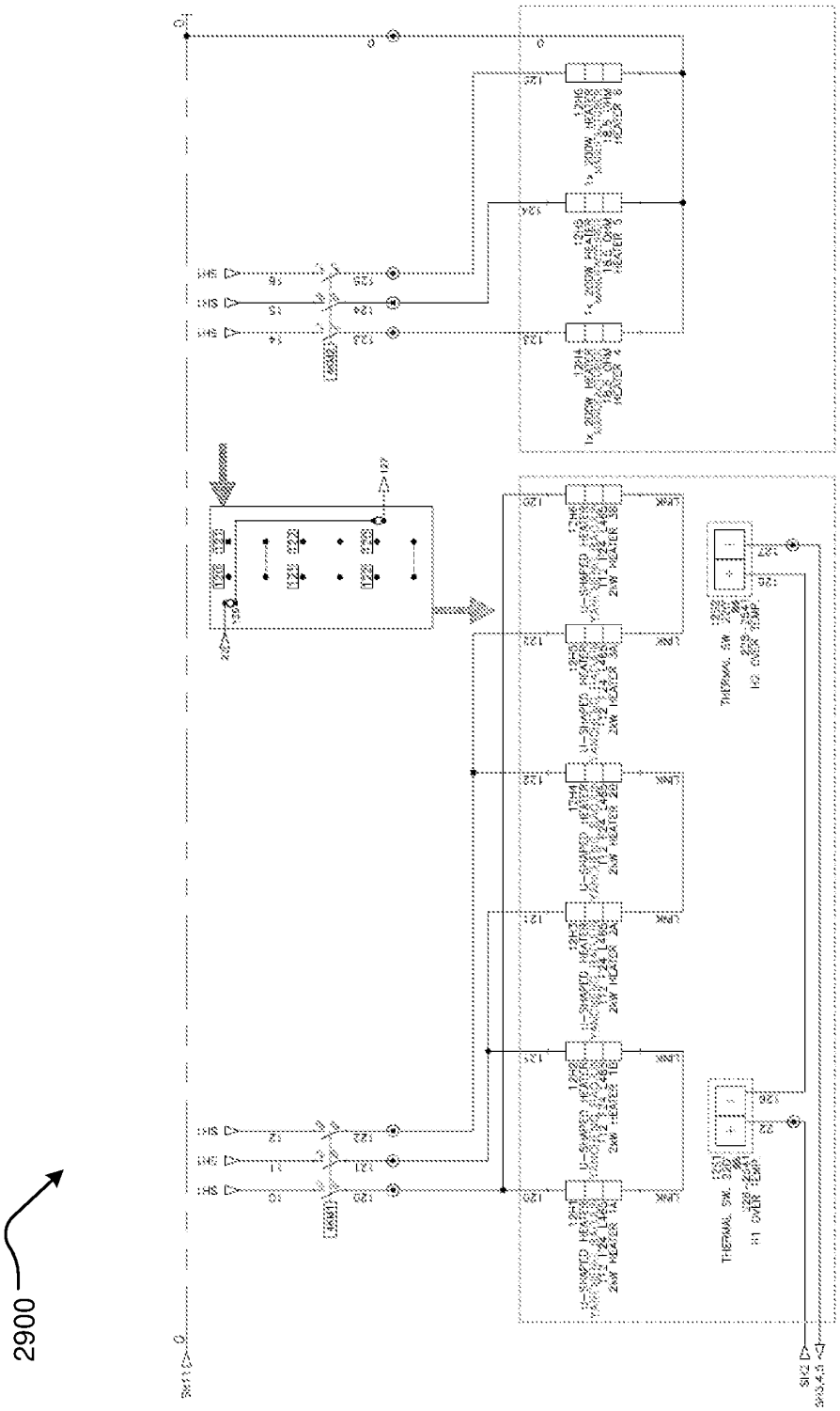

Figure 29

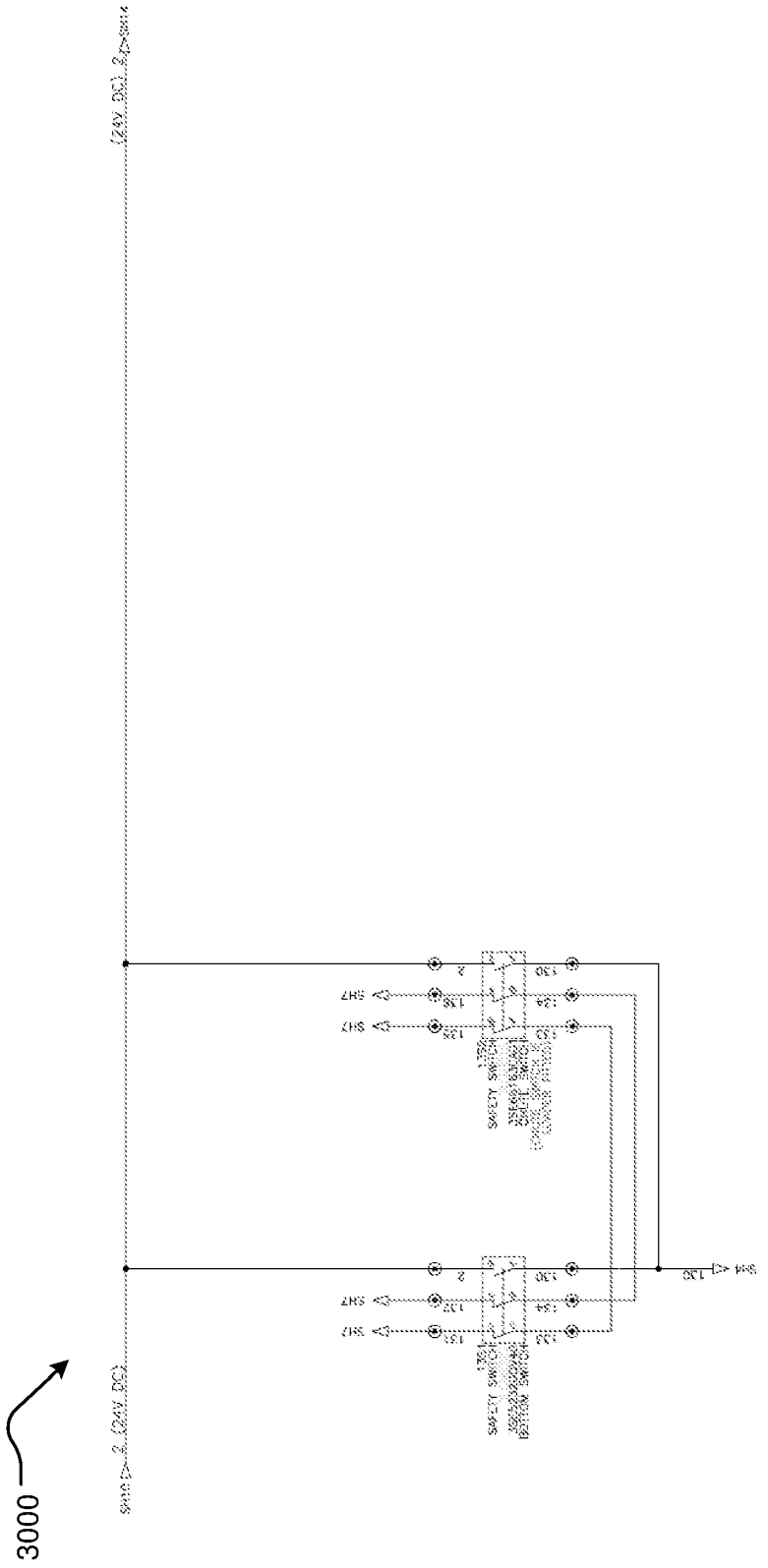

Figure 30

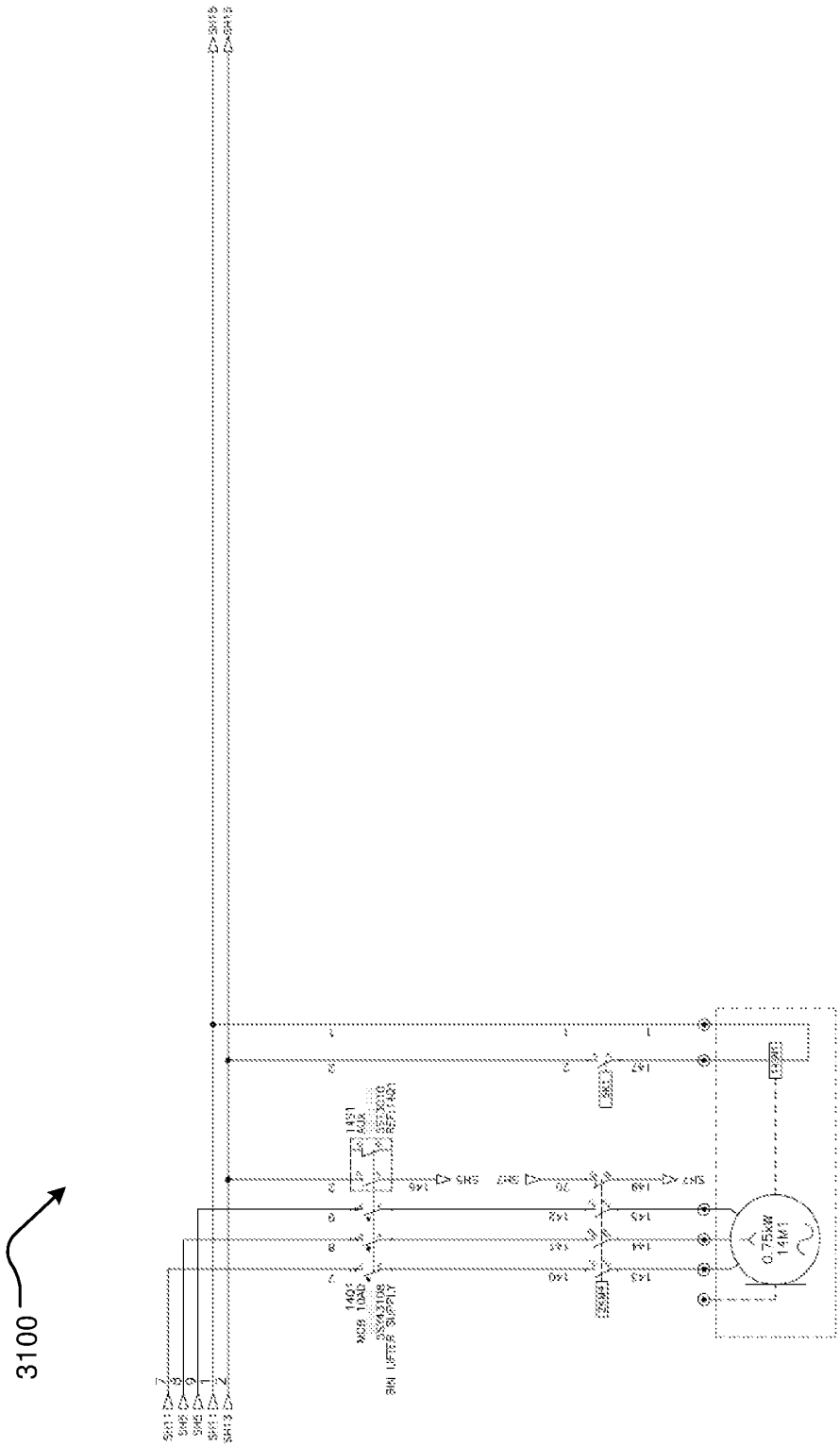

Figure 31

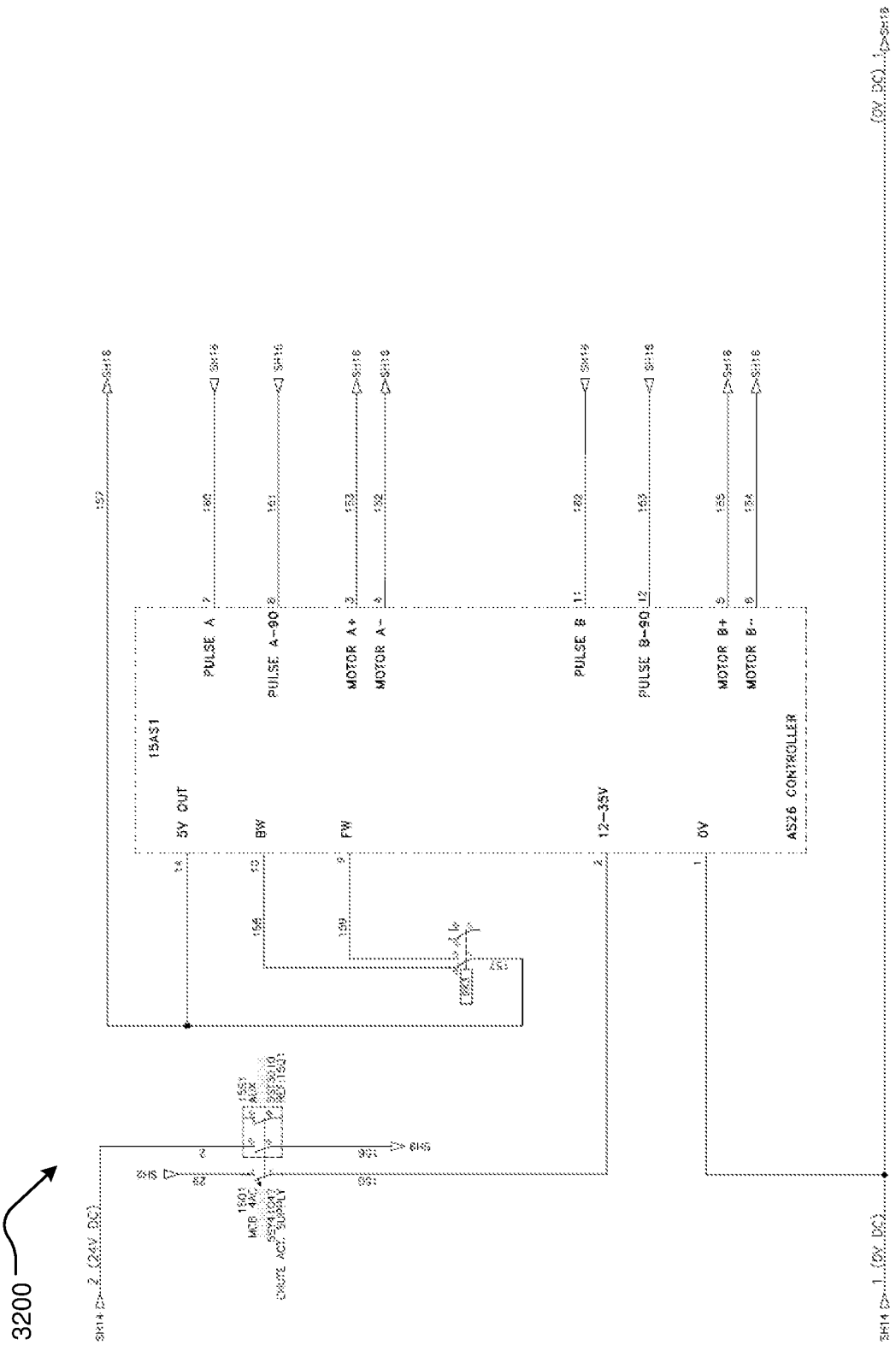
3200
15AS1
5V OUT
BW
FW
12–35V
0V
AS26 CONTROLLER
PULSE A
PULSE A–90
MOTOR A+
MOTOR A–
PULSE B
PULSE B–90
MOTOR B+
MOTOR B–
(0V DC)
(24V DC)

Figure 32

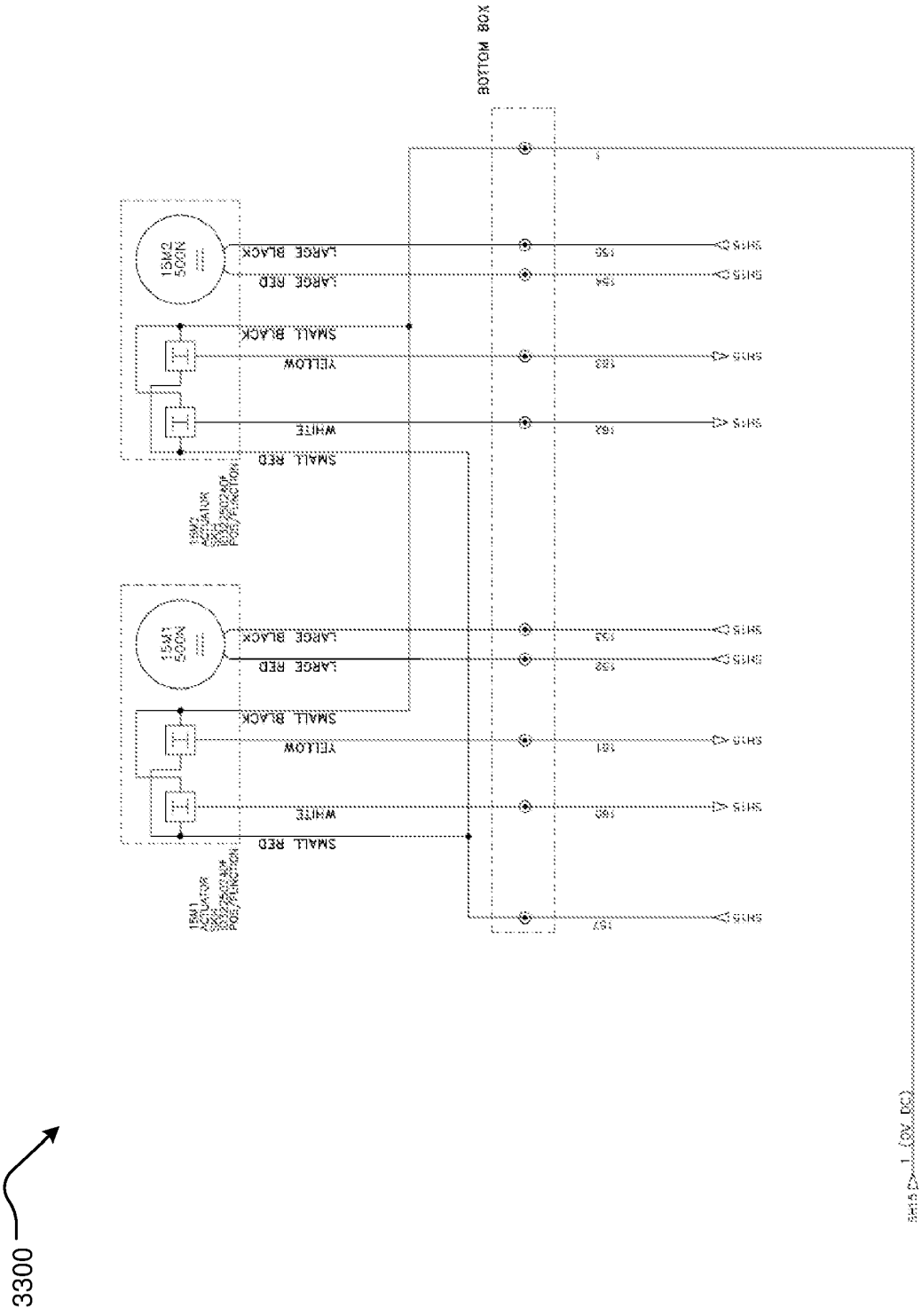
BOTTOM BOX
15M2
500N
LARGE BLACK
LARGE RED
SMALL BLACK
YELLOW
WHITE
SMALL RED
15M1
500N
LARGE BLACK
LARGE RED
SMALL BLACK
YELLOW
WHITE
SMALL RED
3300

Figure 33

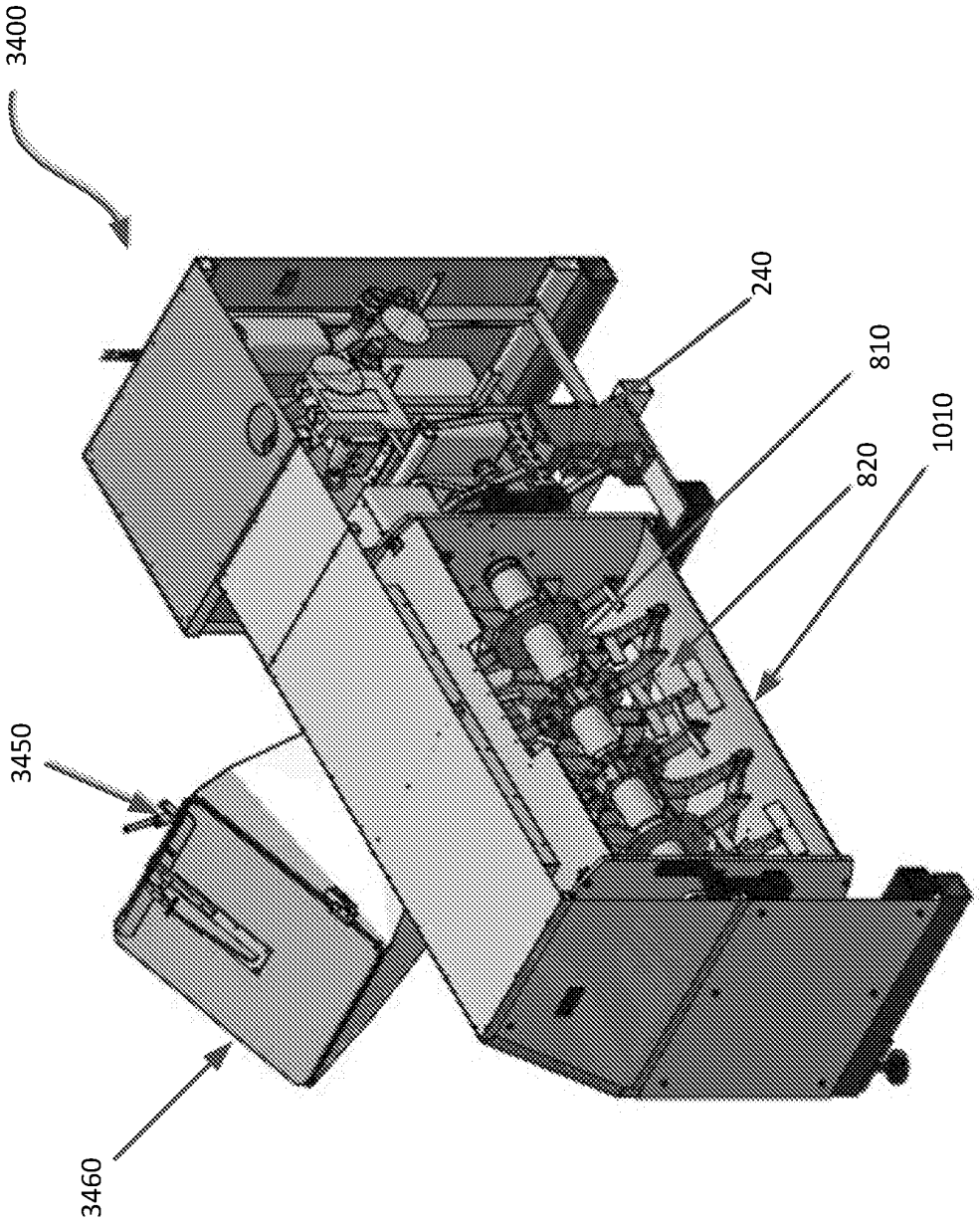

Figure 34A

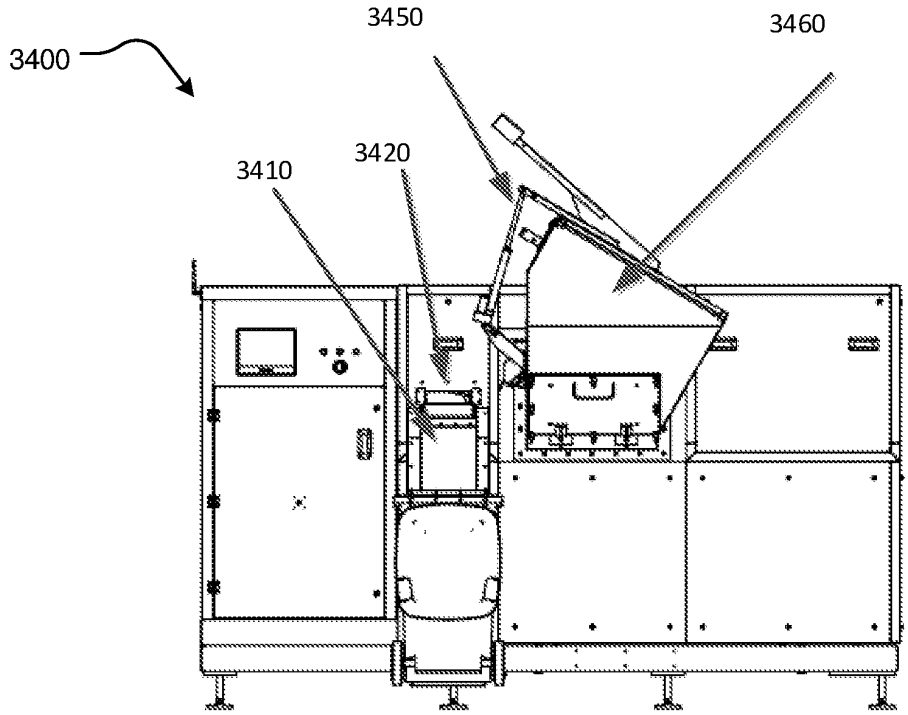

Figure 34B

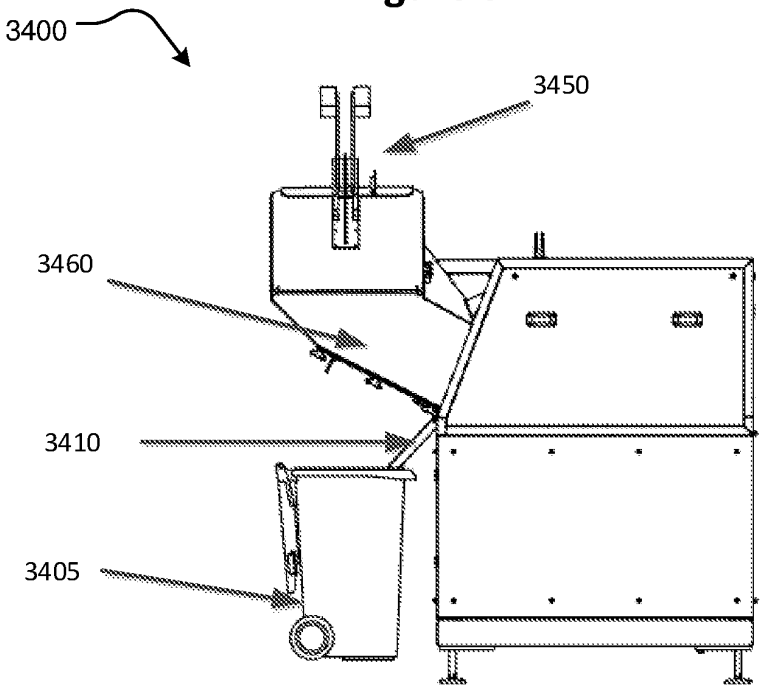

Figure 34C

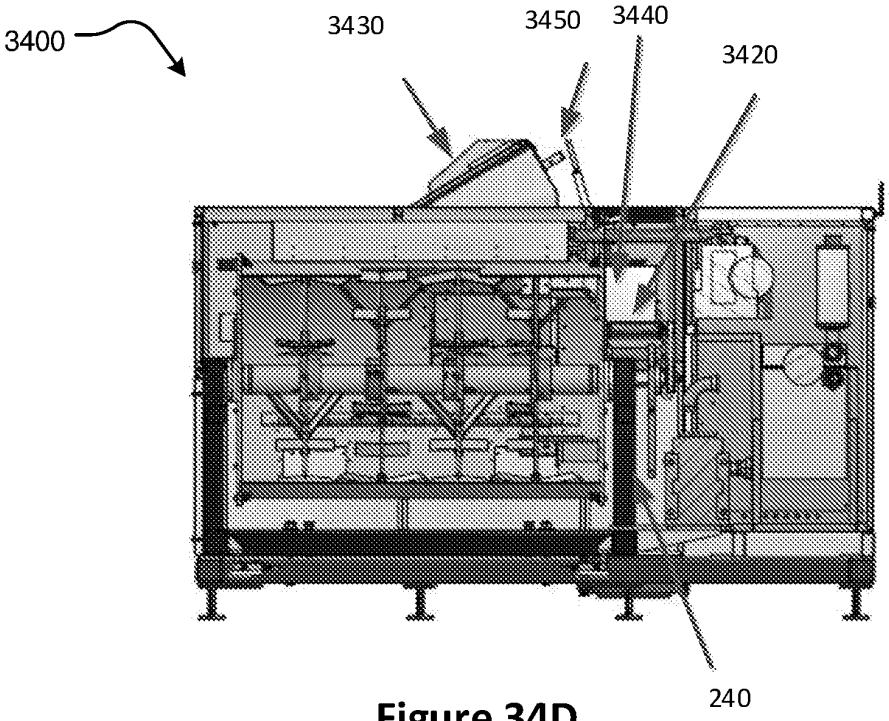

Figure 34D

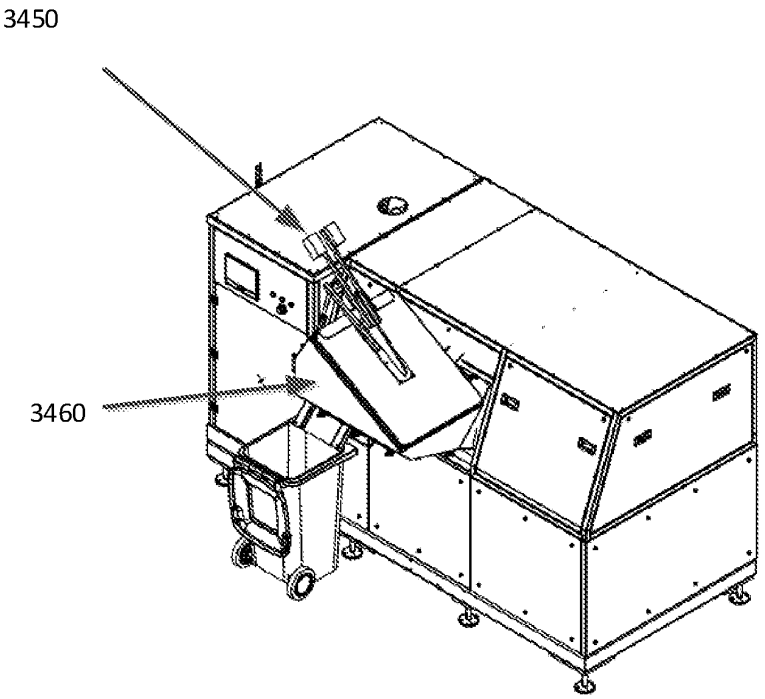

Figure 34E

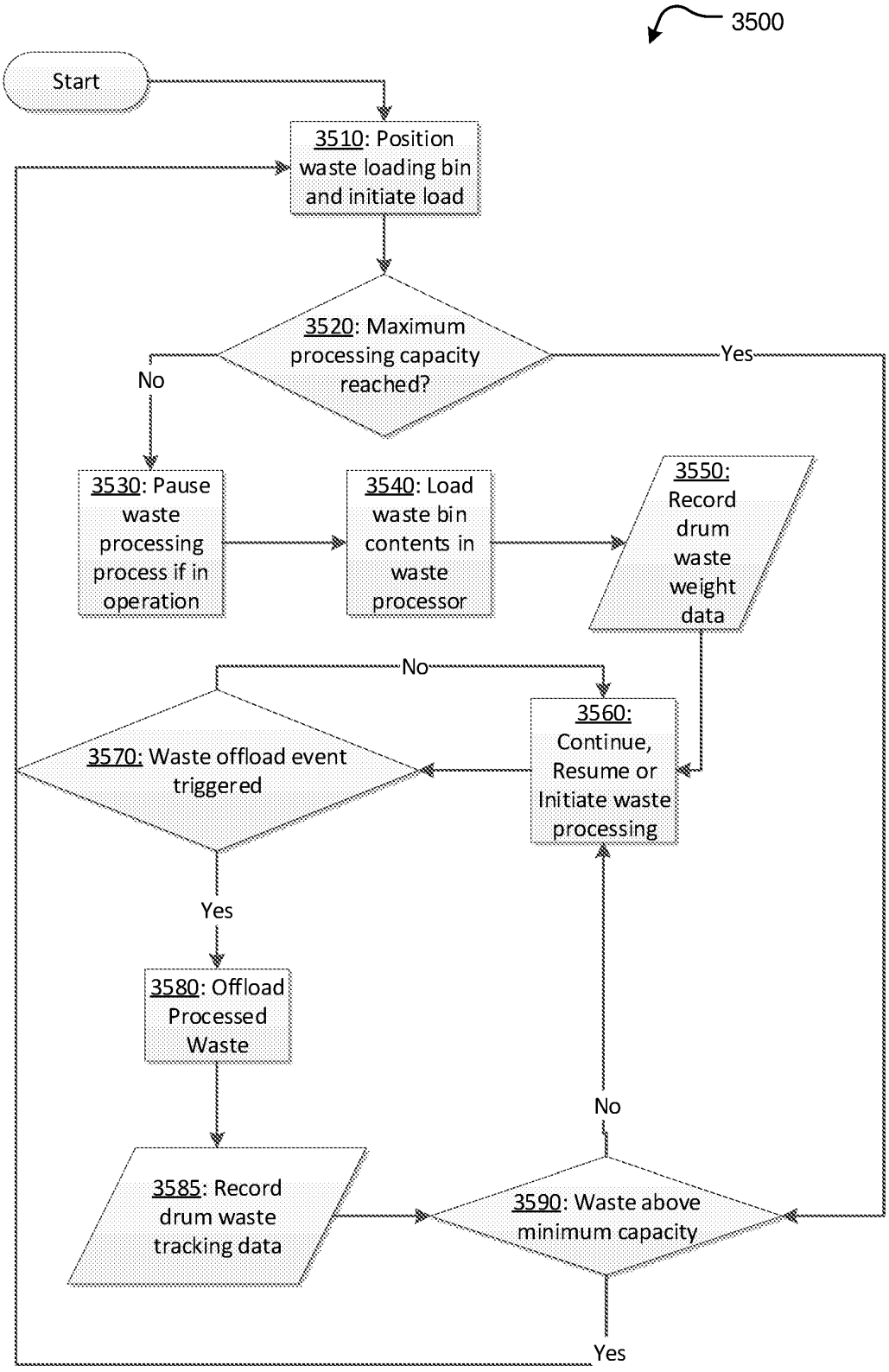
3500
Start
3510: Position waste loading bin and initiate load
3520: Maximum processing capacity reached?
No
Yes
3530: Pause waste processing process if in operation
3540: Load waste bin contents in waste processor
3550: Record drum waste weight data
No
3560: Continue, Resume or Initiate waste processing
3570: Waste offload event triggered
Yes
3580: Offload Processed Waste
3585: Record drum waste tracking data
No
3590: Waste above minimum capacity
Yes

Figure 35

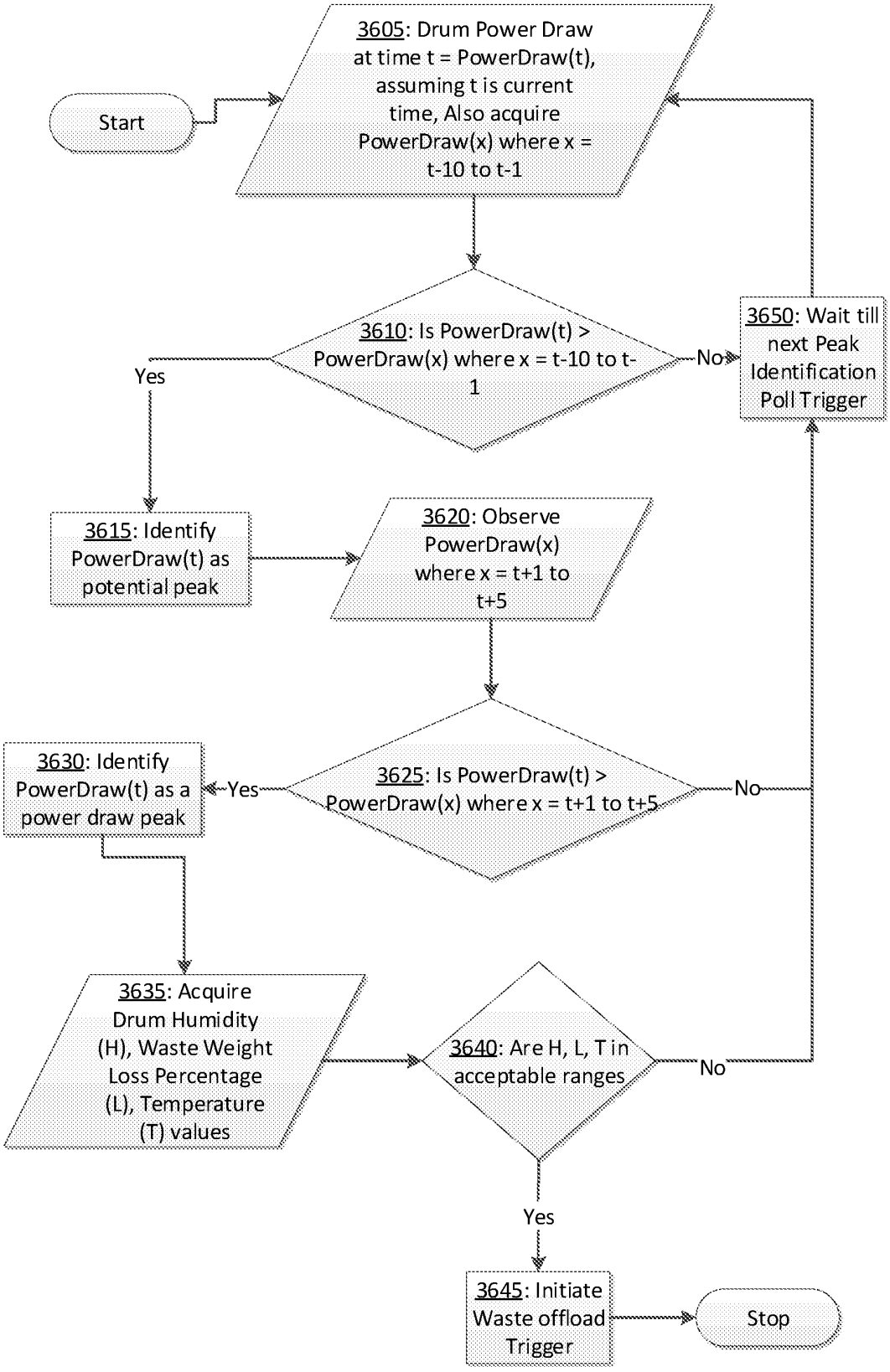
Start
3605: Drum Power Draw at time t = PowerDraw(t), assuming t is current time, Also acquire PowerDraw(x) where x = t-10 to t-1
3610: Is PowerDraw(t) > PowerDraw(x) where x = t-10 to t-1
Yes
No
3650: Wait till next Peak Identification Poll Trigger
3615: Identify PowerDraw(t) as potential peak
3620: Observe PowerDraw(x) where x = t+1 to t+5
3625: Is PowerDraw(t) > PowerDraw(x) where x = t+1 to t+5
Yes
No
3630: Identify PowerDraw(t) as a power draw peak
3635: Acquire Drum Humidity (H), Waste Weight Loss Percentage (L), Temperature (T) values
3640: Are H, L, T in acceptable ranges
No
Yes
3645: Initiate Waste offload Trigger
Stop

Figure 36

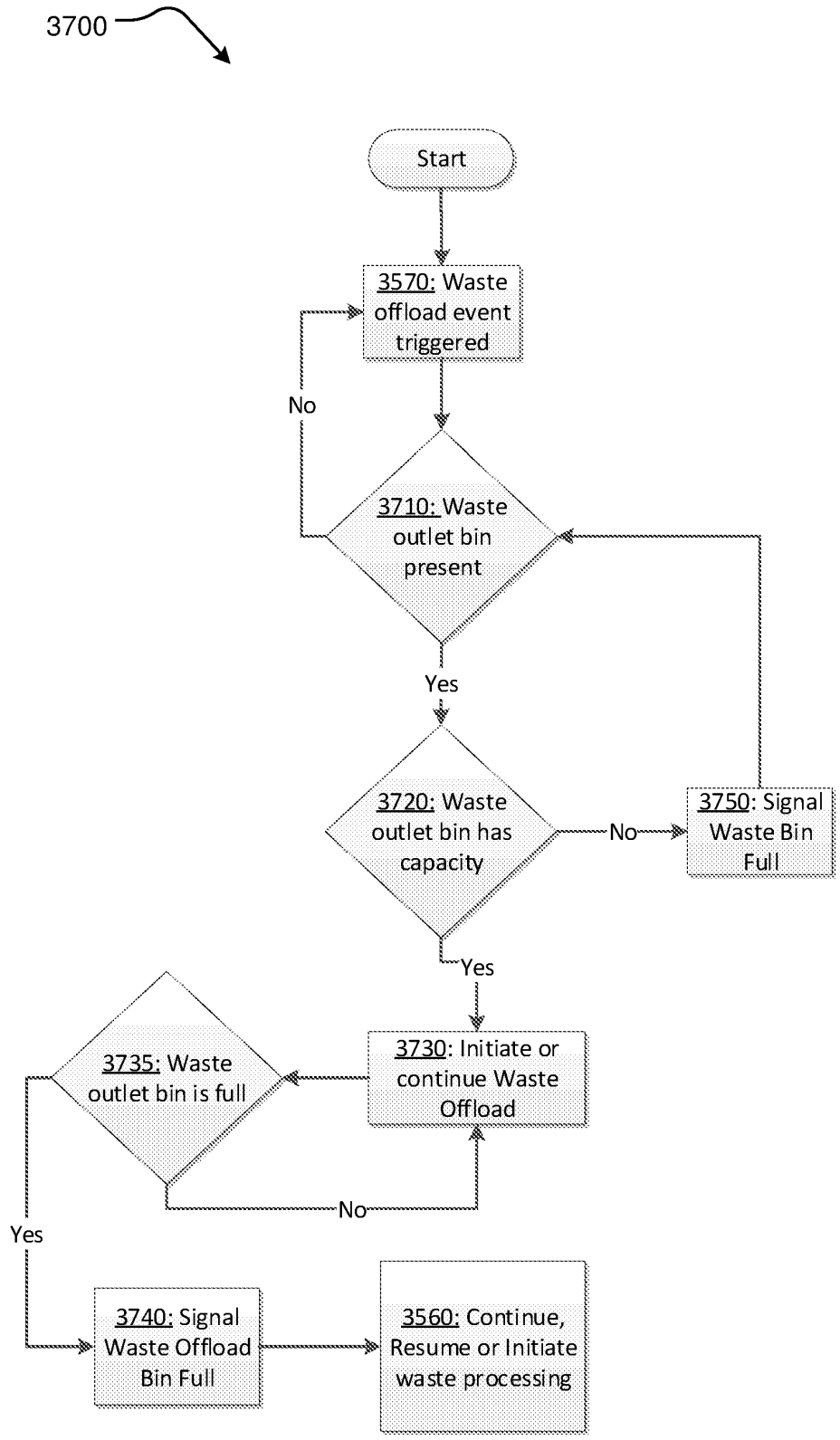
3700
Start
3570: Waste offload event triggered
No
3710: Waste outlet bin present
Yes
3720: Waste outlet bin has capacity
No
3750: Signal Waste Bin Full
Yes
3730: Initiate or continue Waste Offload
3735: Waste outlet bin is full
No
Yes
3740: Signal Waste Offload Bin Full
3560: Continue, Resume or Initiate waste processing

Figure 37

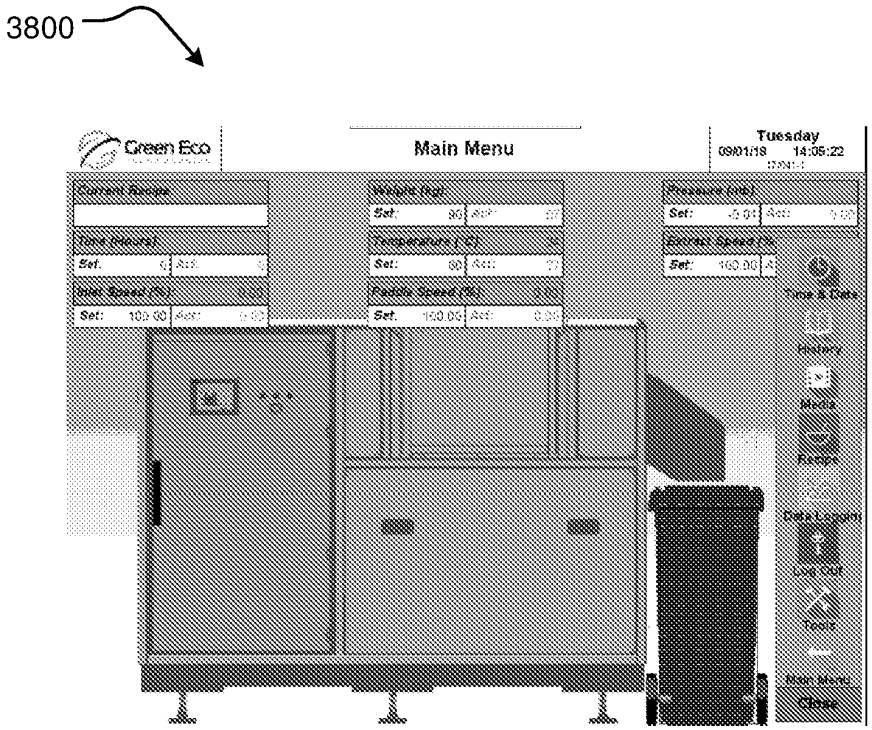

Figure 38

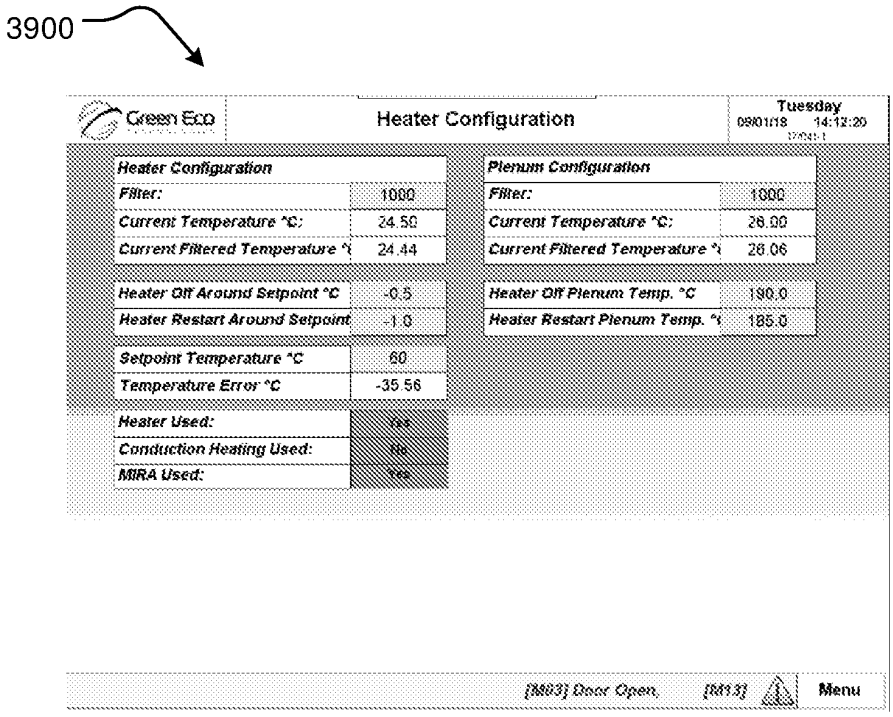

Figure 39

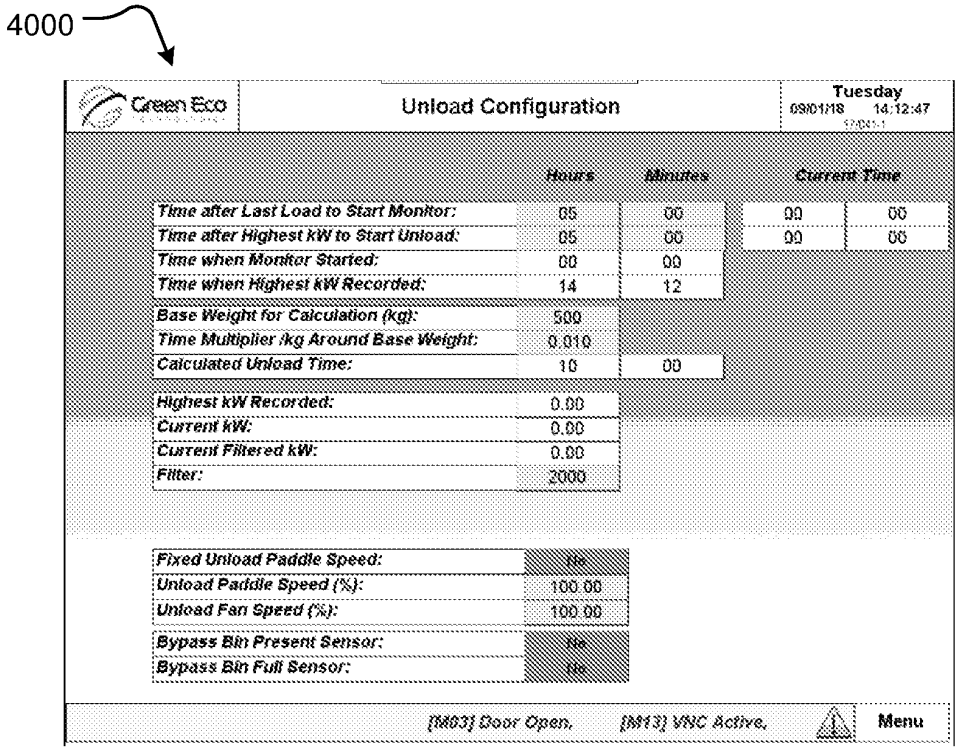

Figure 40

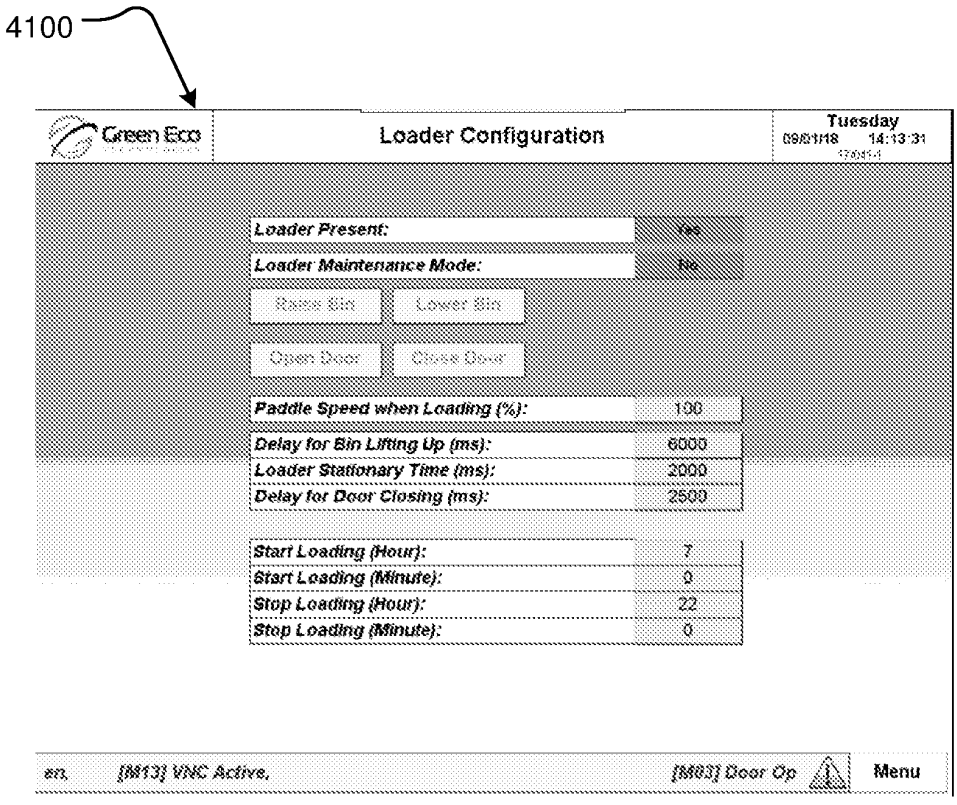

Figure 41

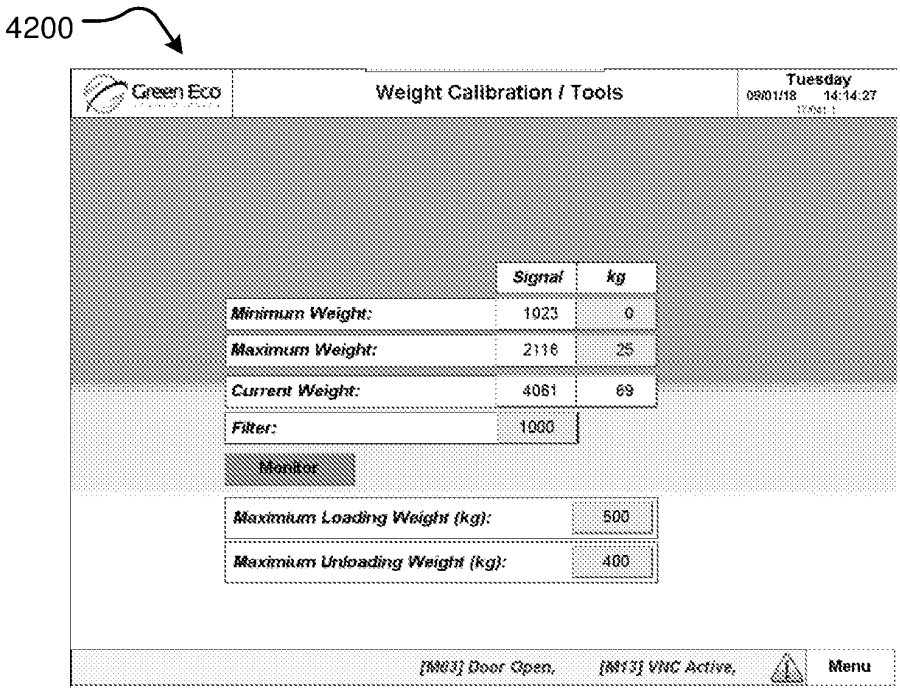

Figure 42

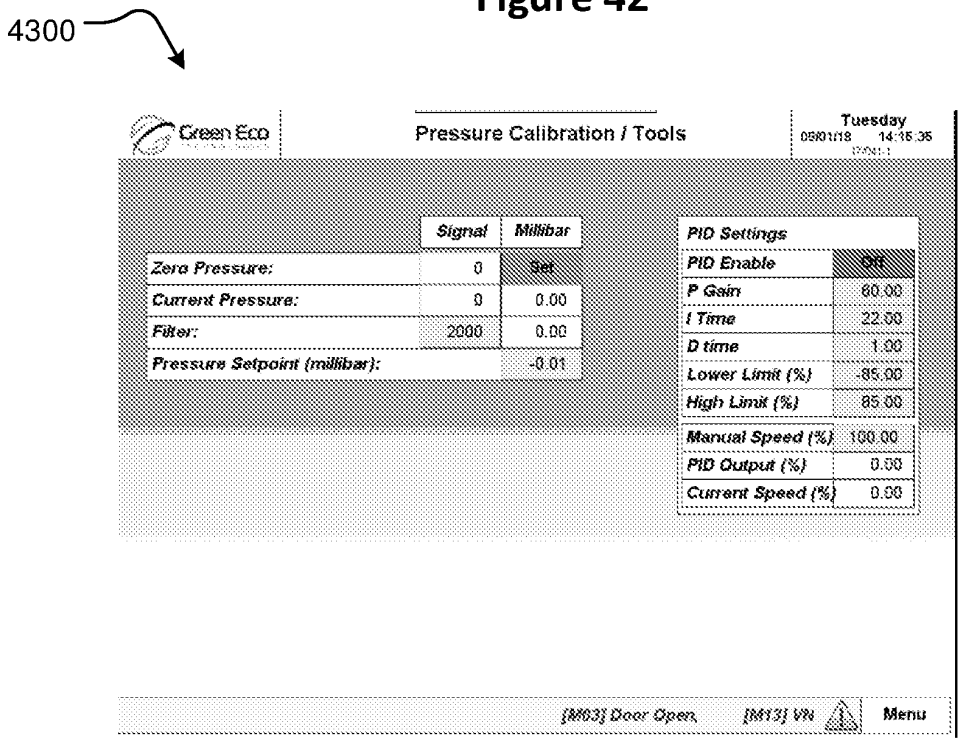

Figure 43

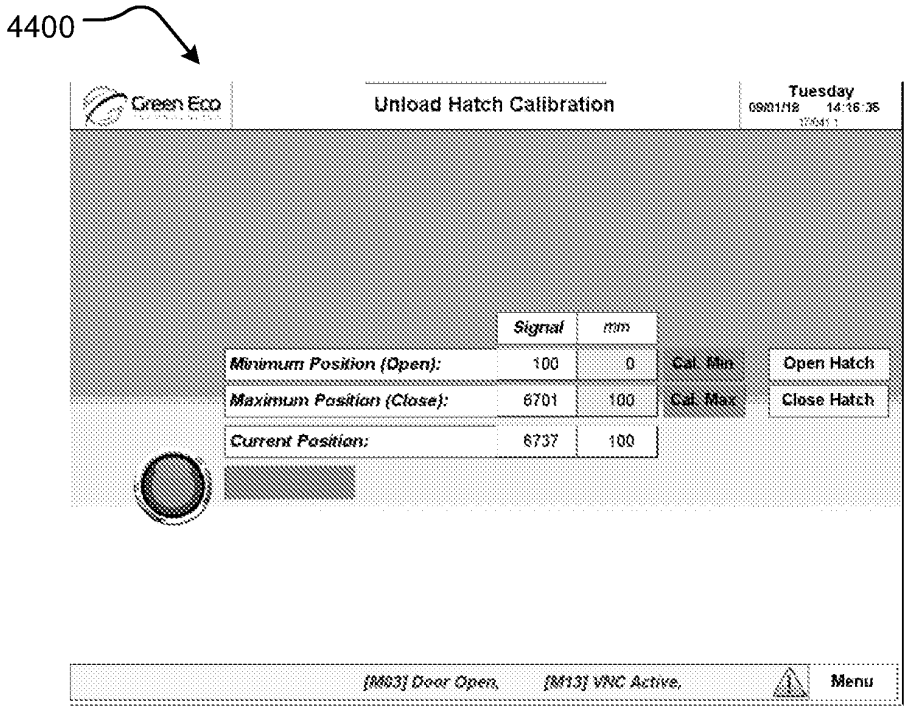

Figure 44

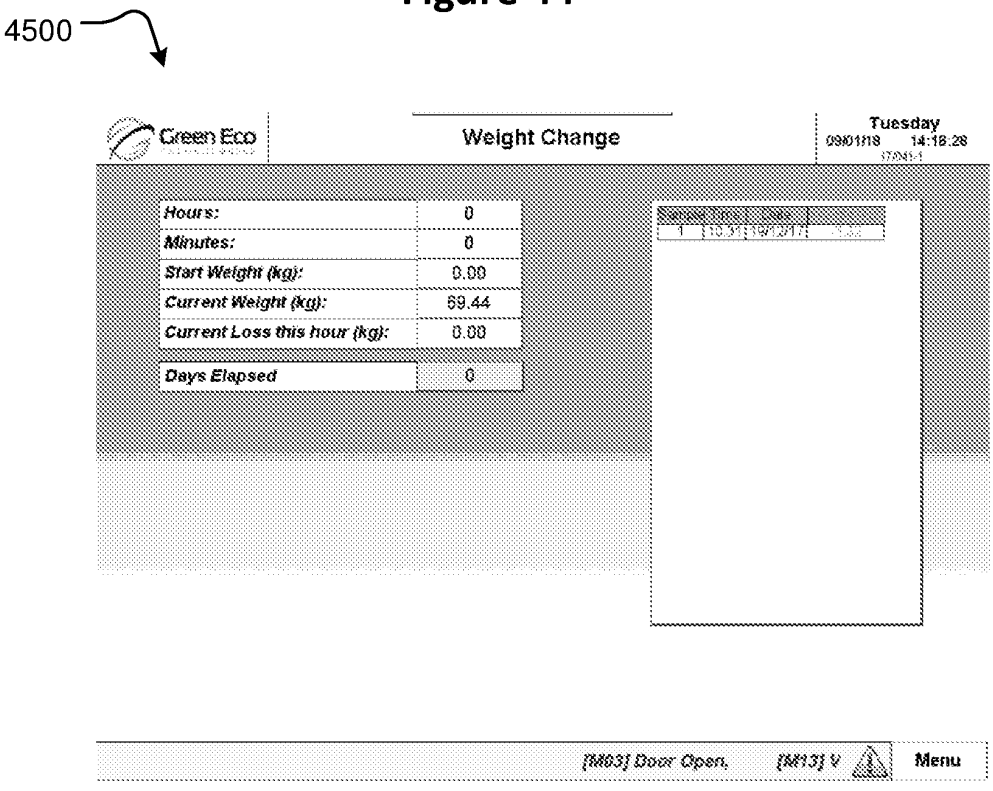

Figure 45

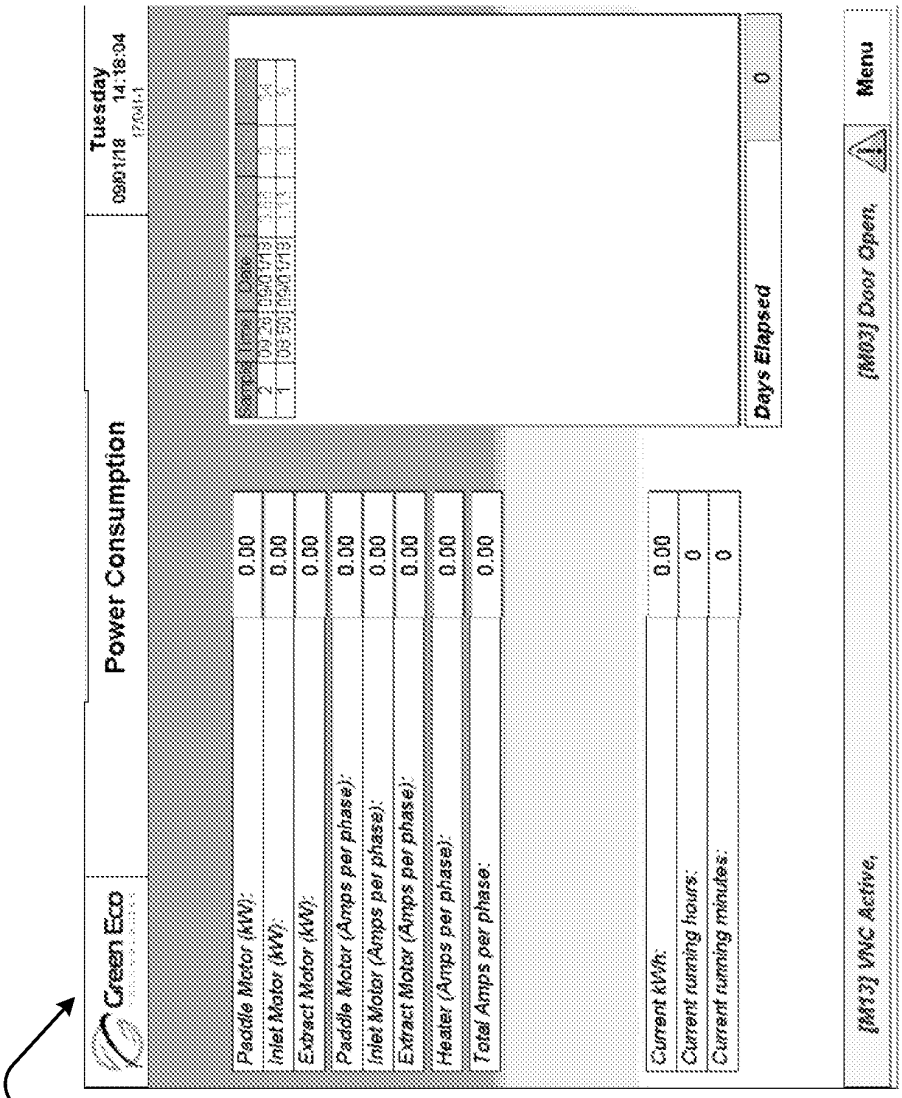
4600
Green Eco
Power Consumption
Tuesday
09/01/18 14:16:04
Paddle Motor (kW): 0.00
Inlet Motor (kW): 0.00
Extract Motor (kW): 0.00
Paddle Motor (Amps per phase): 0.00
Inlet Motor (Amps per phase): 0.00
Extract Motor (Amps per phase): 0.00
Heater (Amps per phase): 0.00
Total Amps per phase: 0.00
Current kWh: 0.00
Current running hours: 0
Current running minutes: 0
Days Elapsed 0
[M13] VNC Active,
[M03] Door Open,
Menu

Figure 46

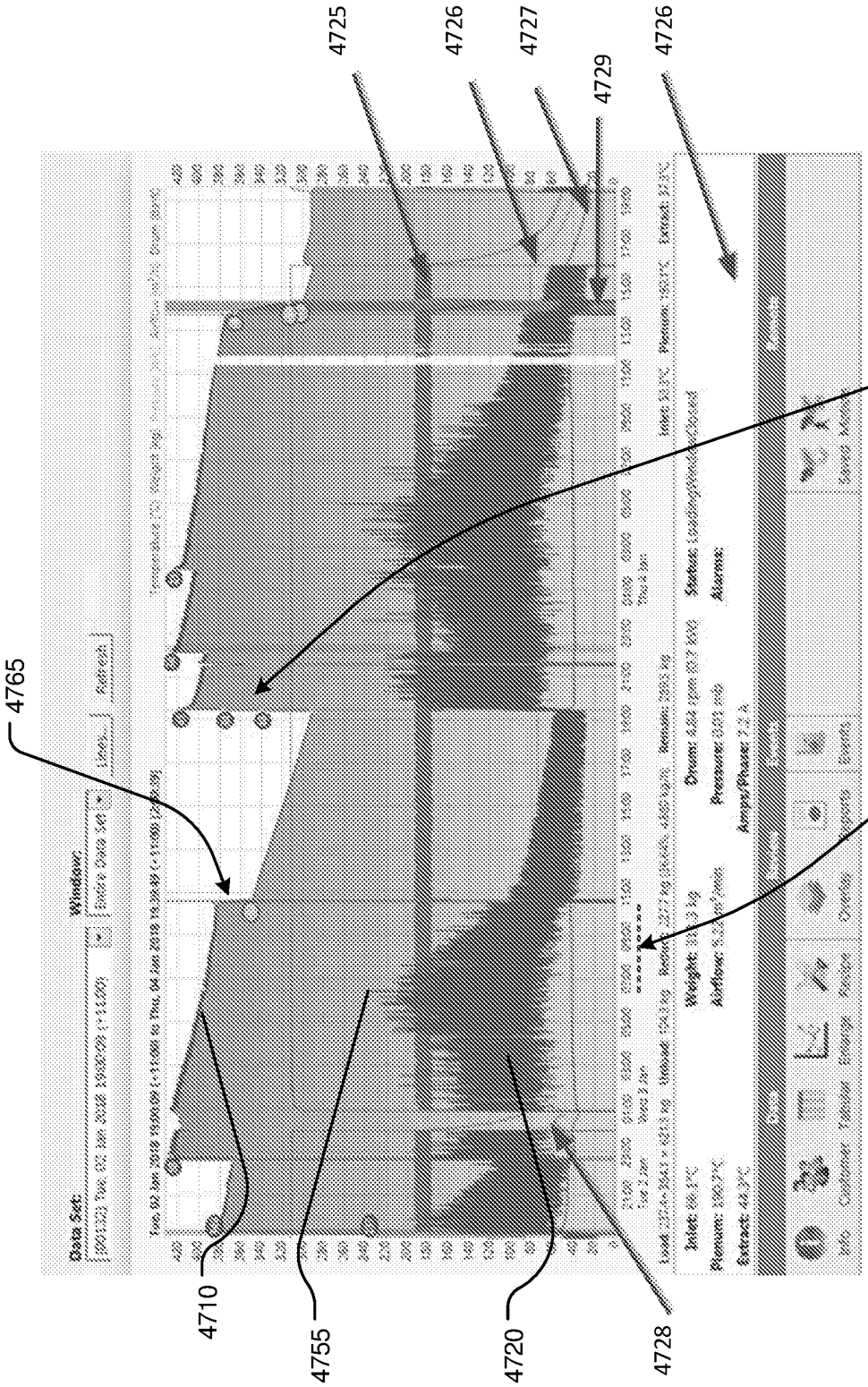

Figure 47

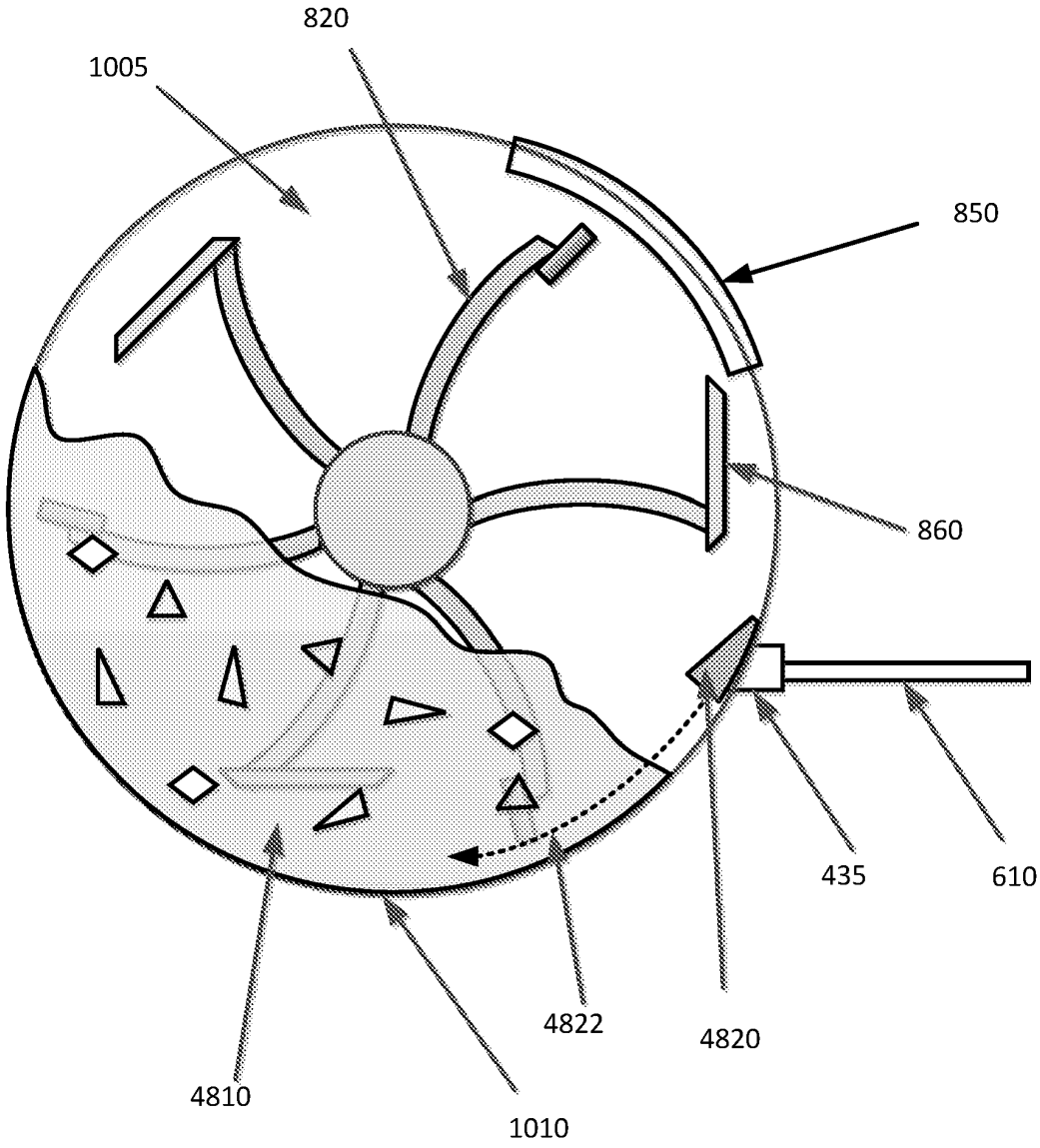

Figure 48

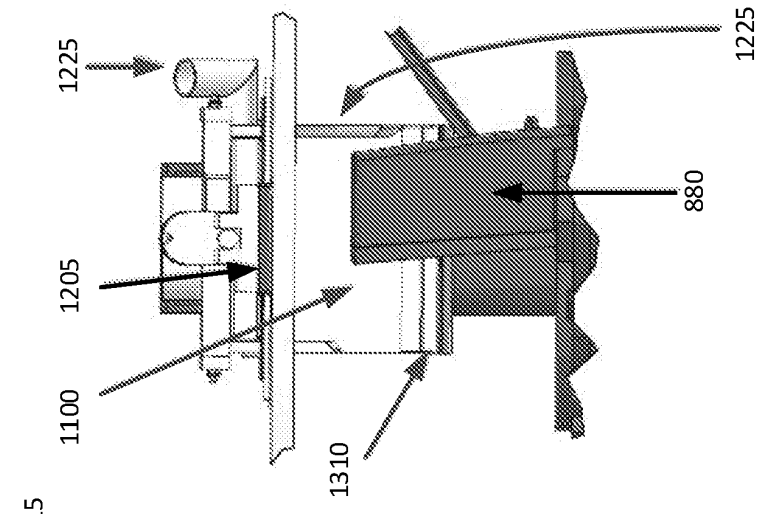

Figure 49C

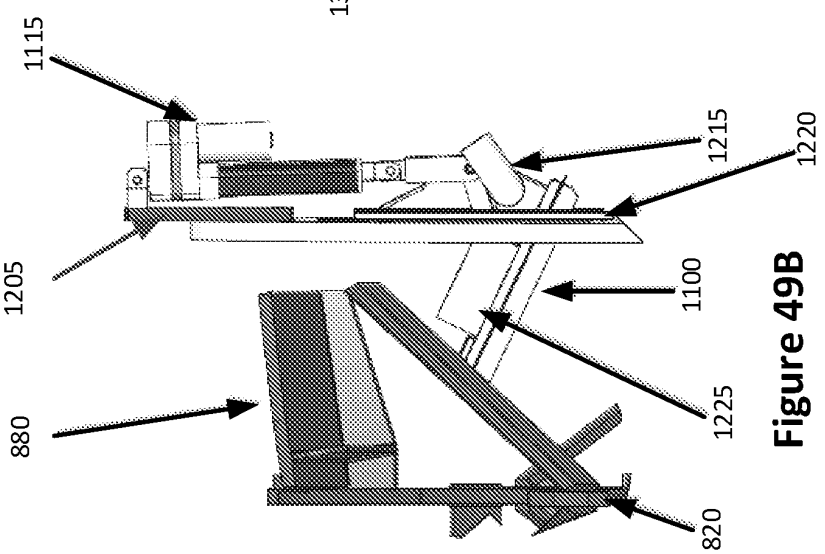

Figure 49B

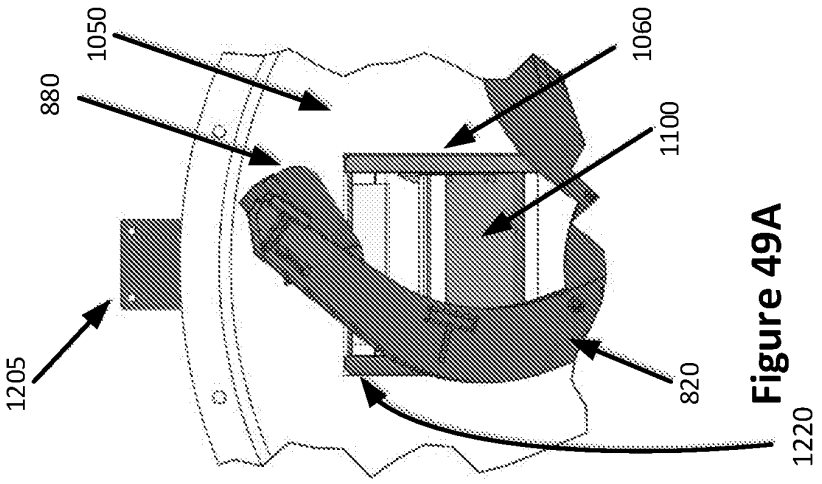

Figure 49A

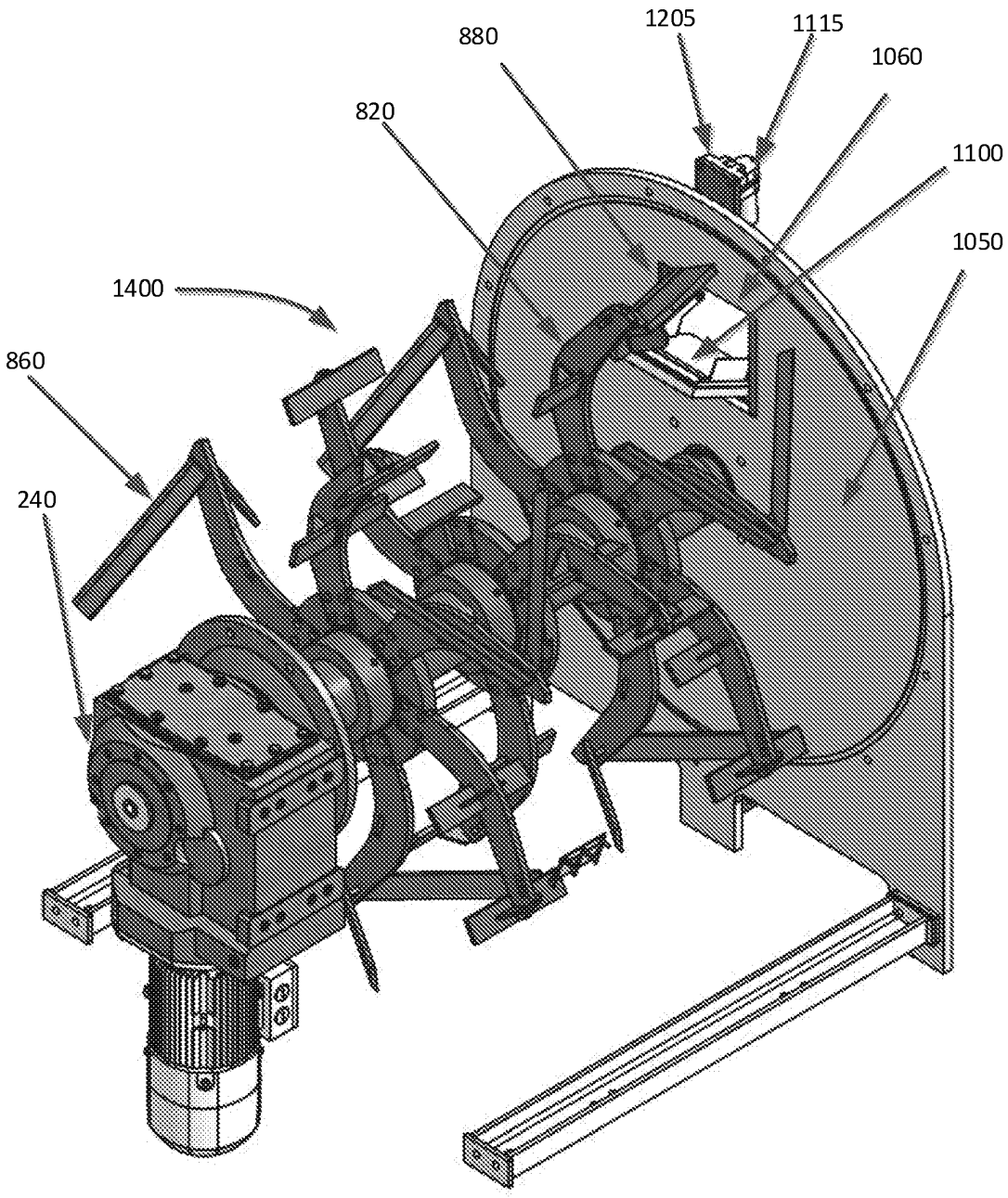

Figure 50

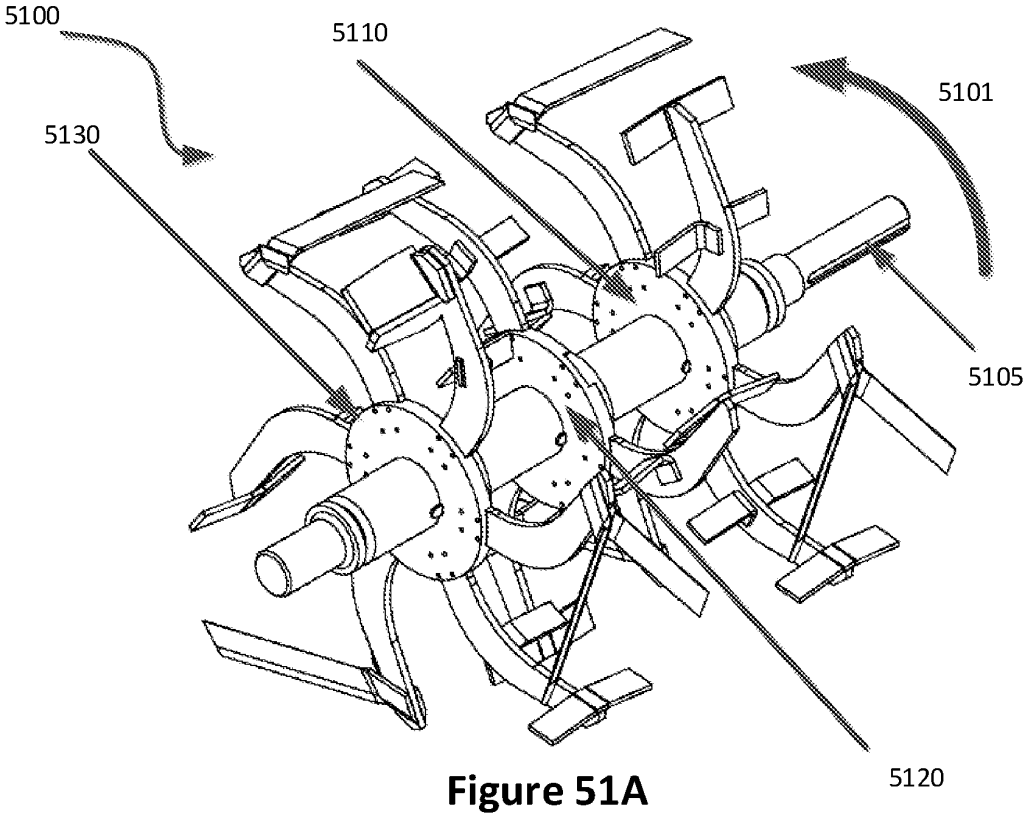

Figure 51A

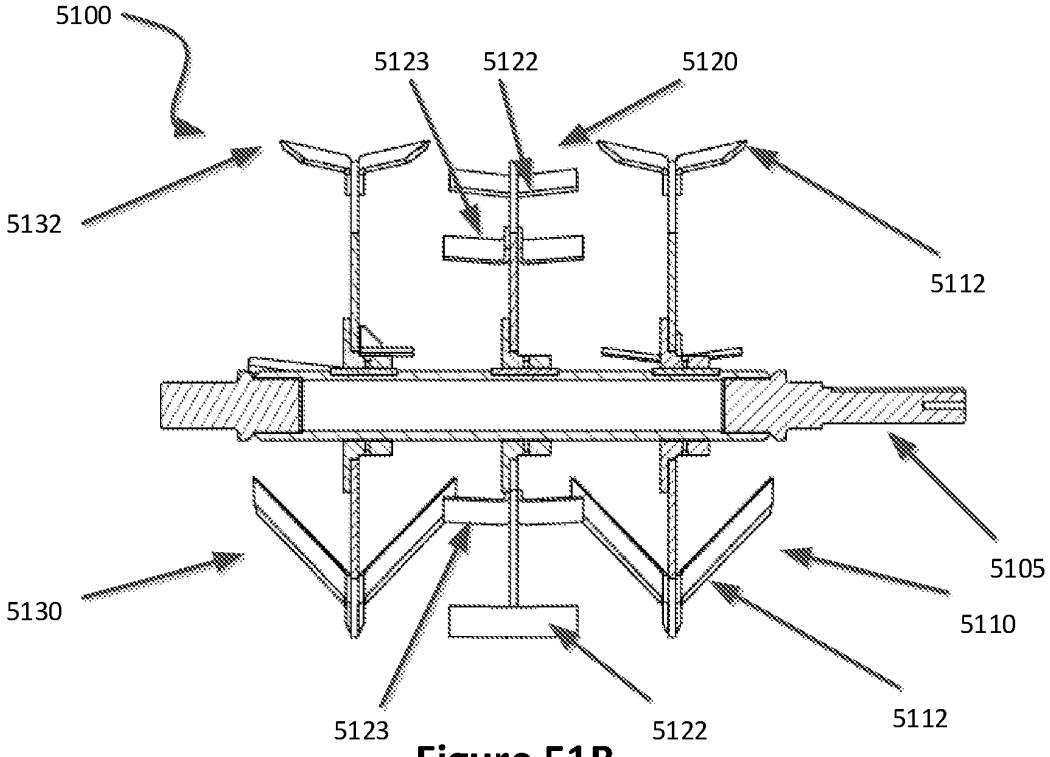

Figure 51B

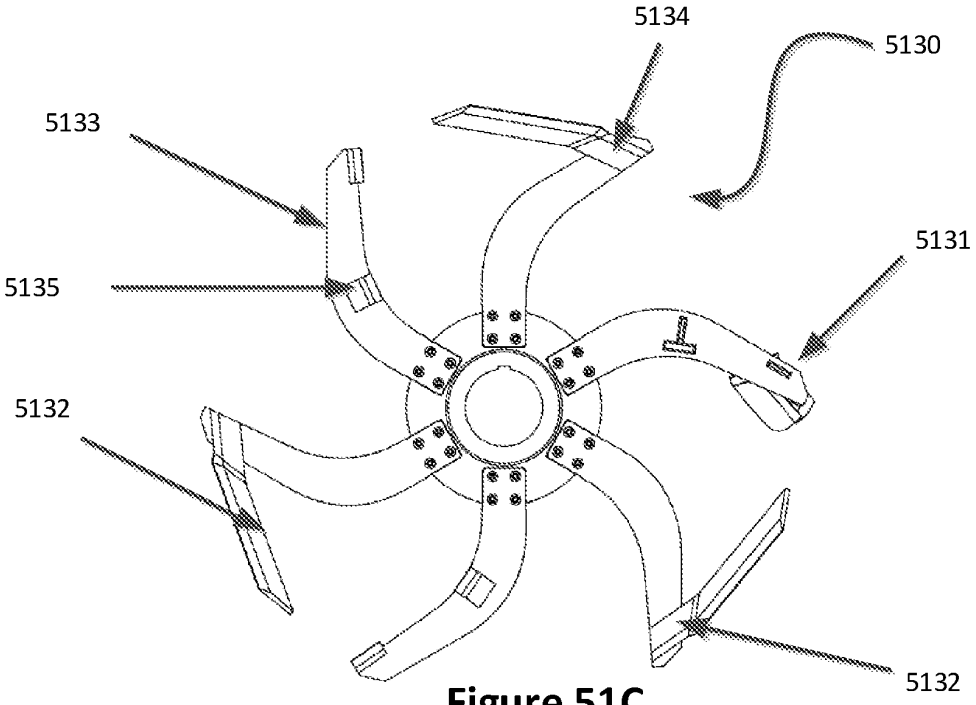

Figure 51C

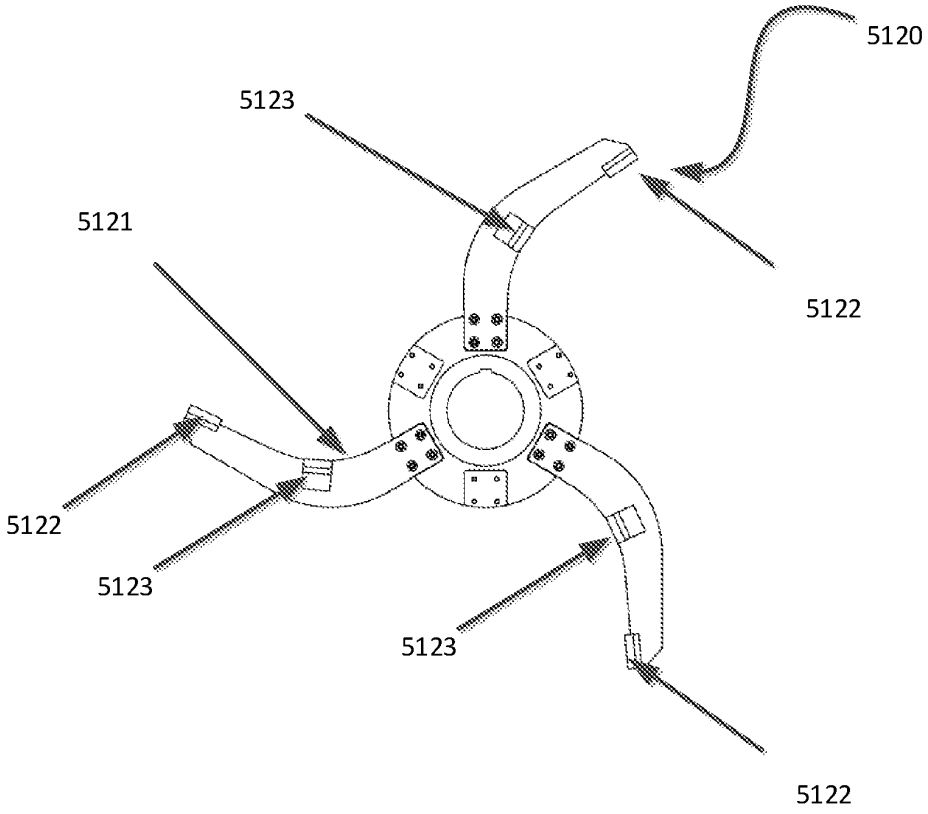

Figure 51D

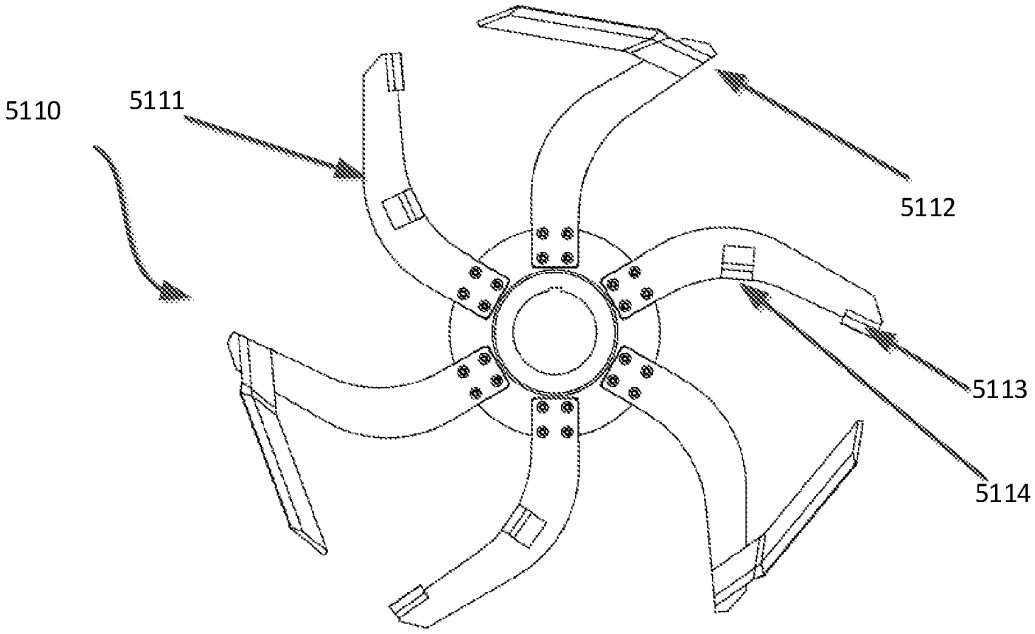

Figure 51E

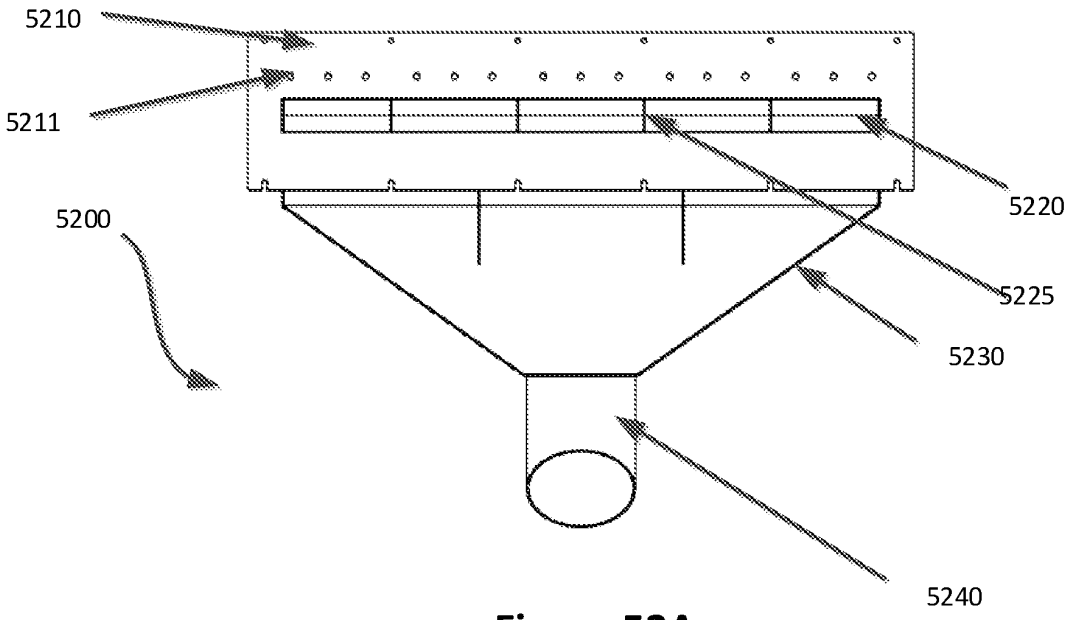

Figure 52A

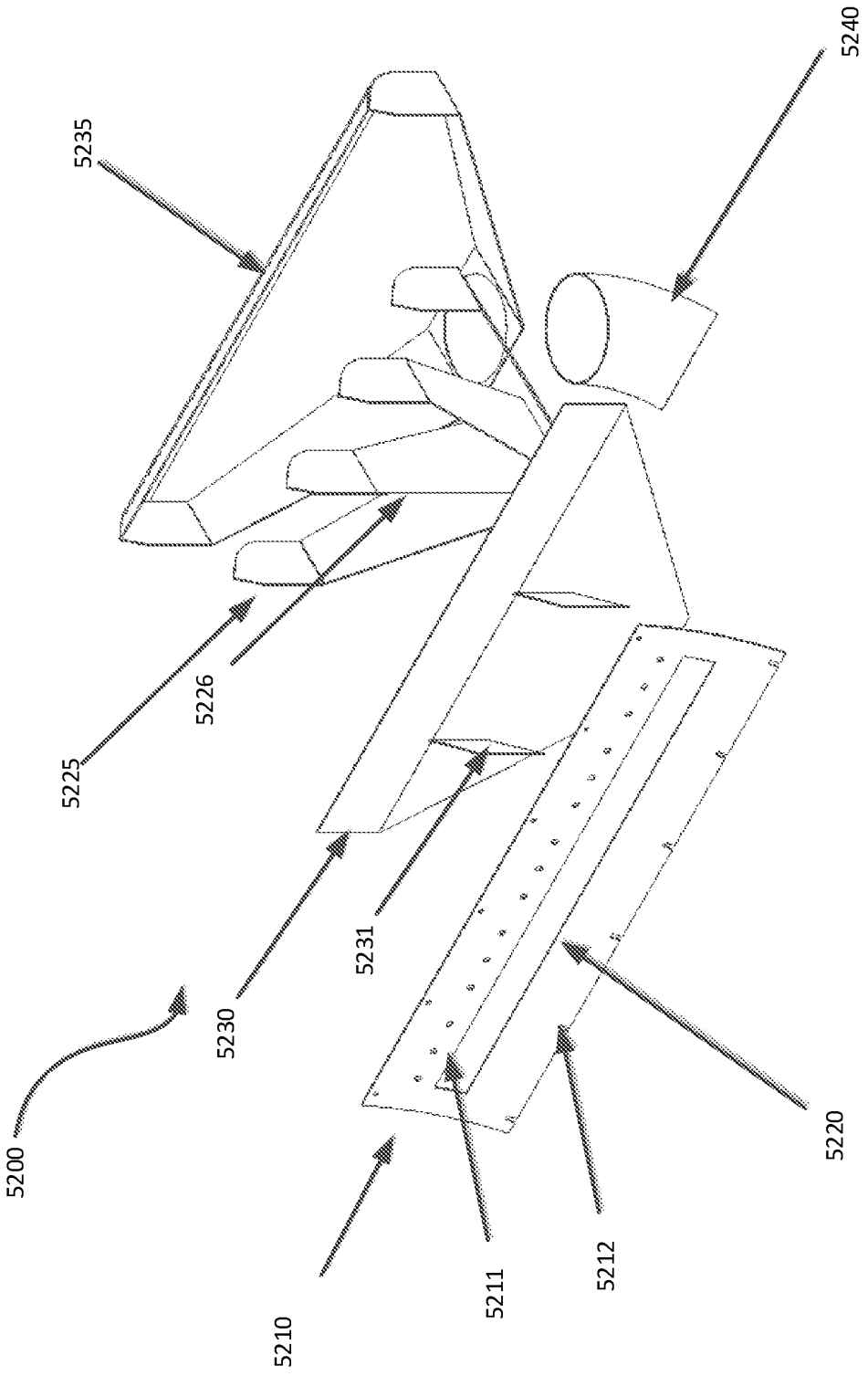

Figure 52B

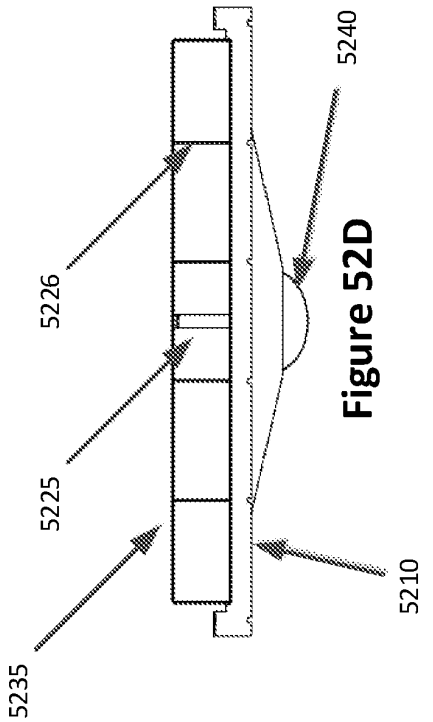

Figure 52D

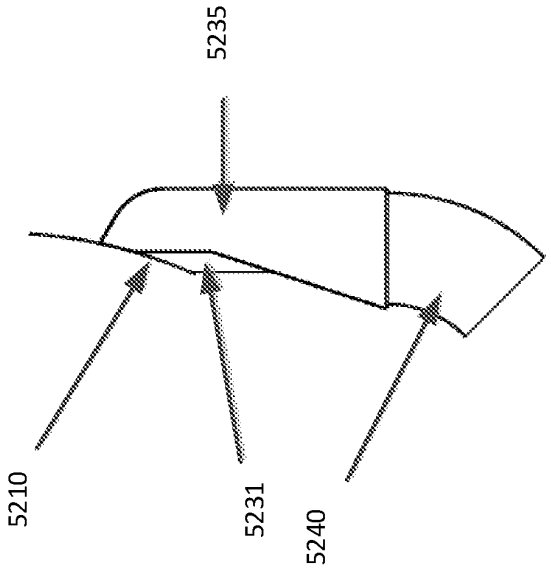

Figure 52E

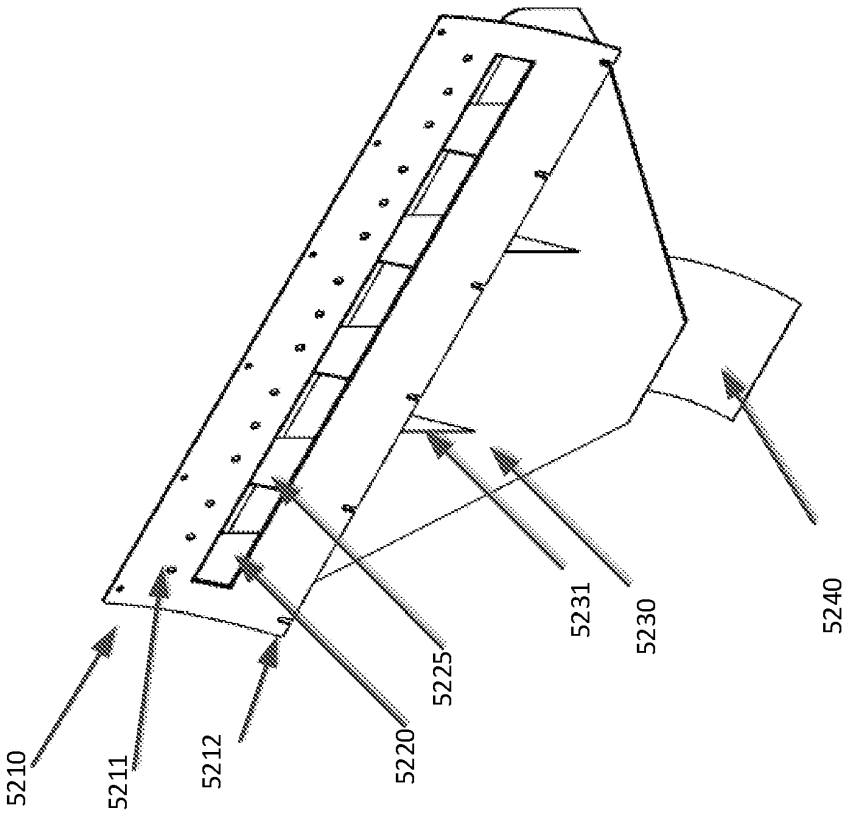

Figure 52C

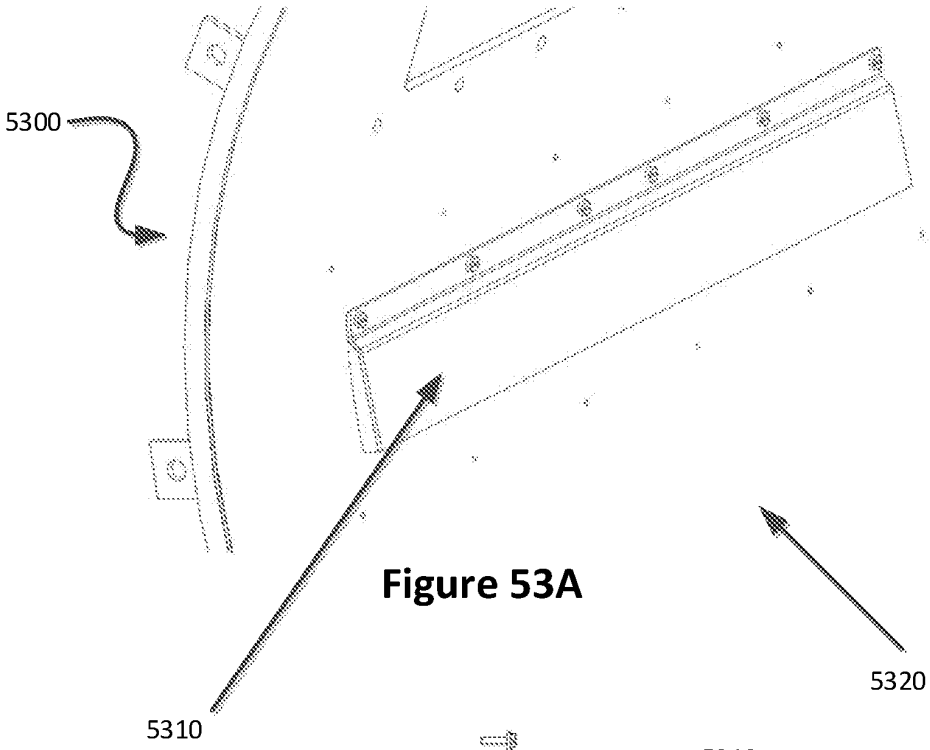

Figure 53A



Figure 53B

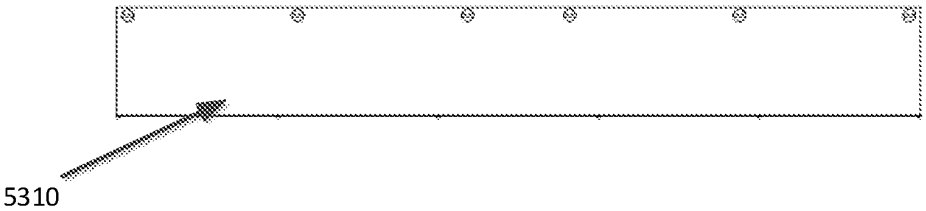

Figure 53C

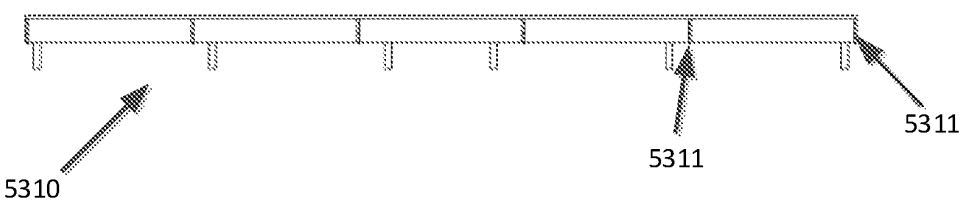

Figure 53D

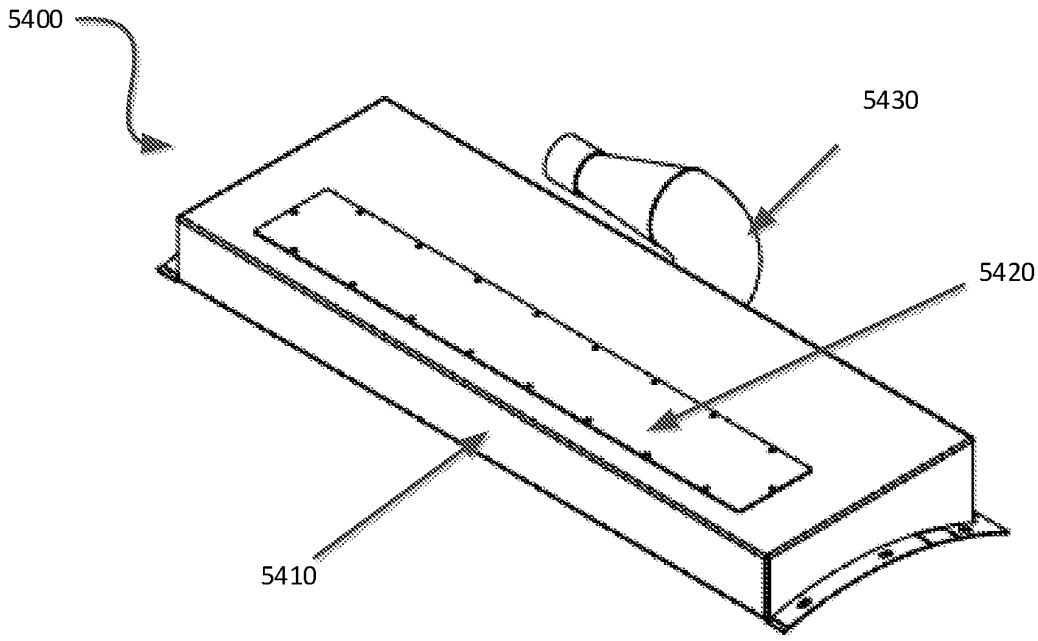

Figure 54A

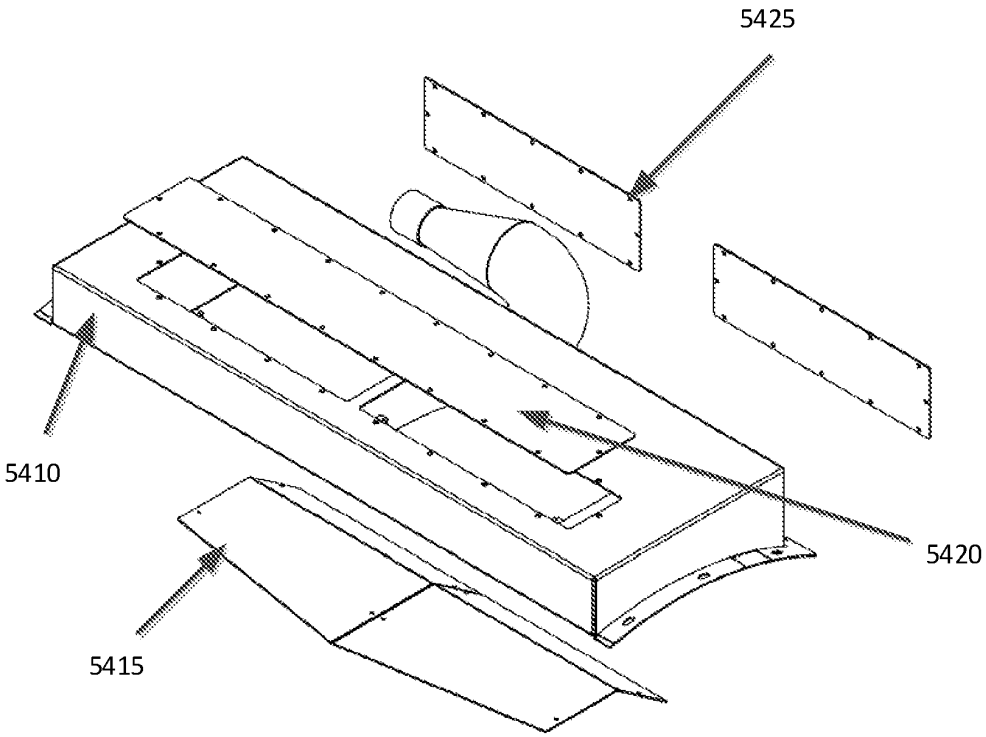

Figure 54B

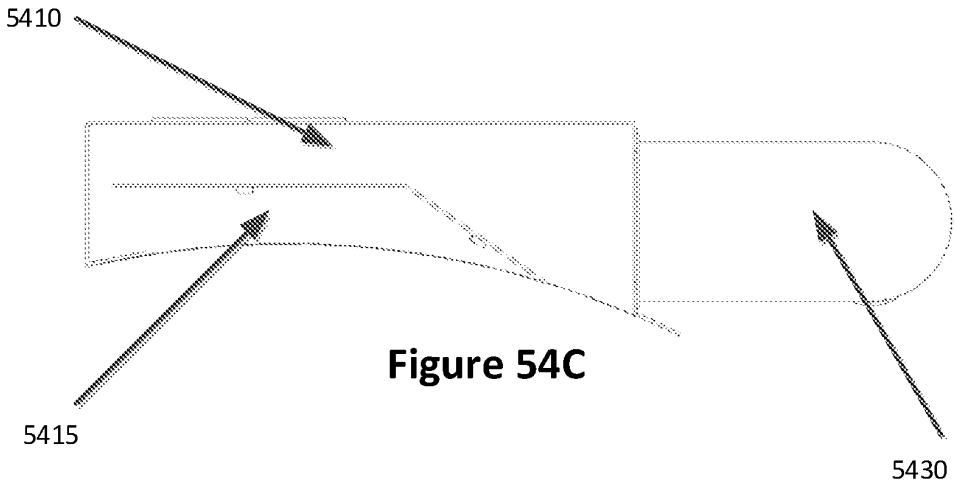

Figure 54C

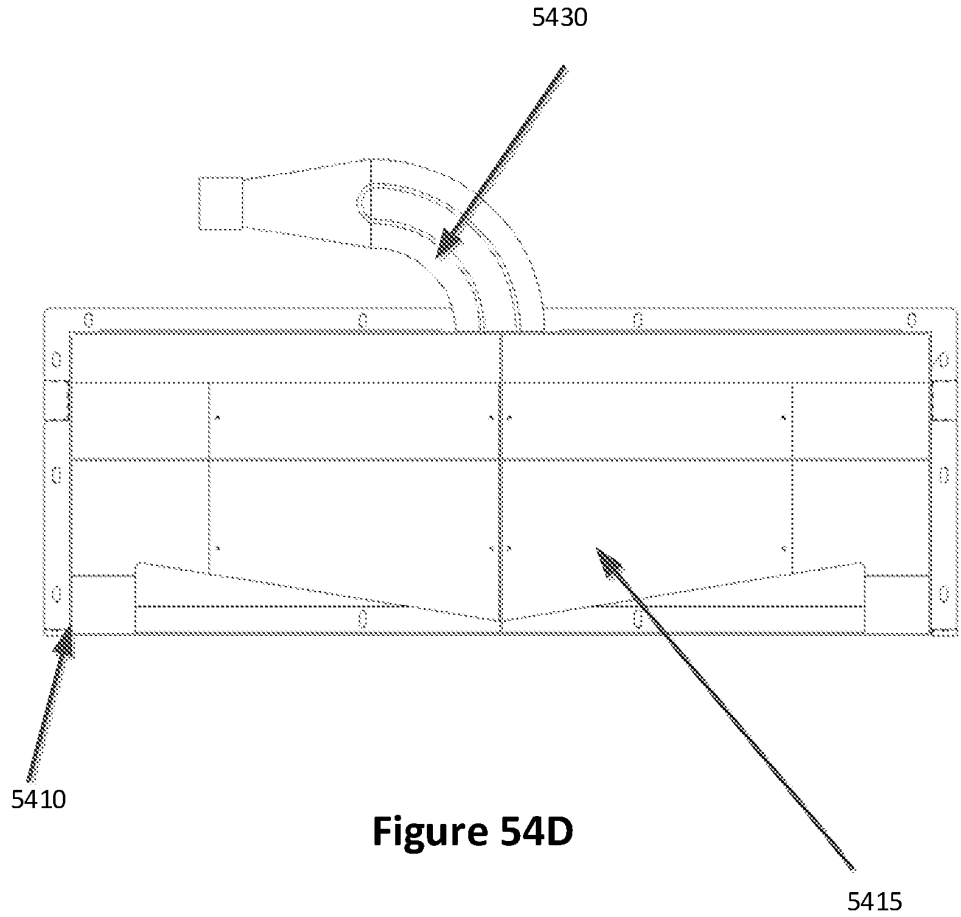

Figure 54D

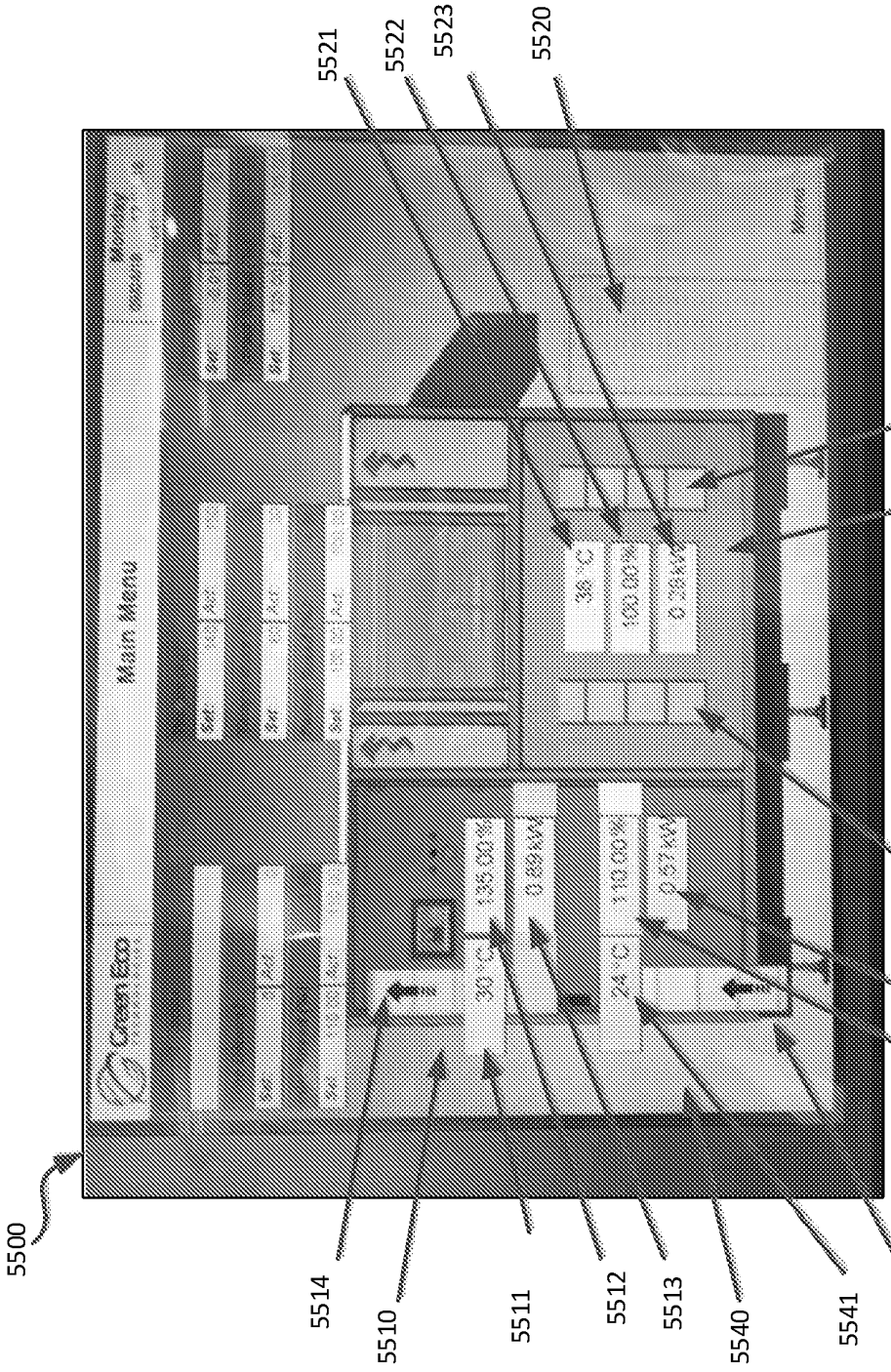
5500
5510
5511
5512
5513
5514
5520
5521
5522
5523
5530
5540
5541
5542
5543
5544
5550
5550
Main Menu

Figure 55

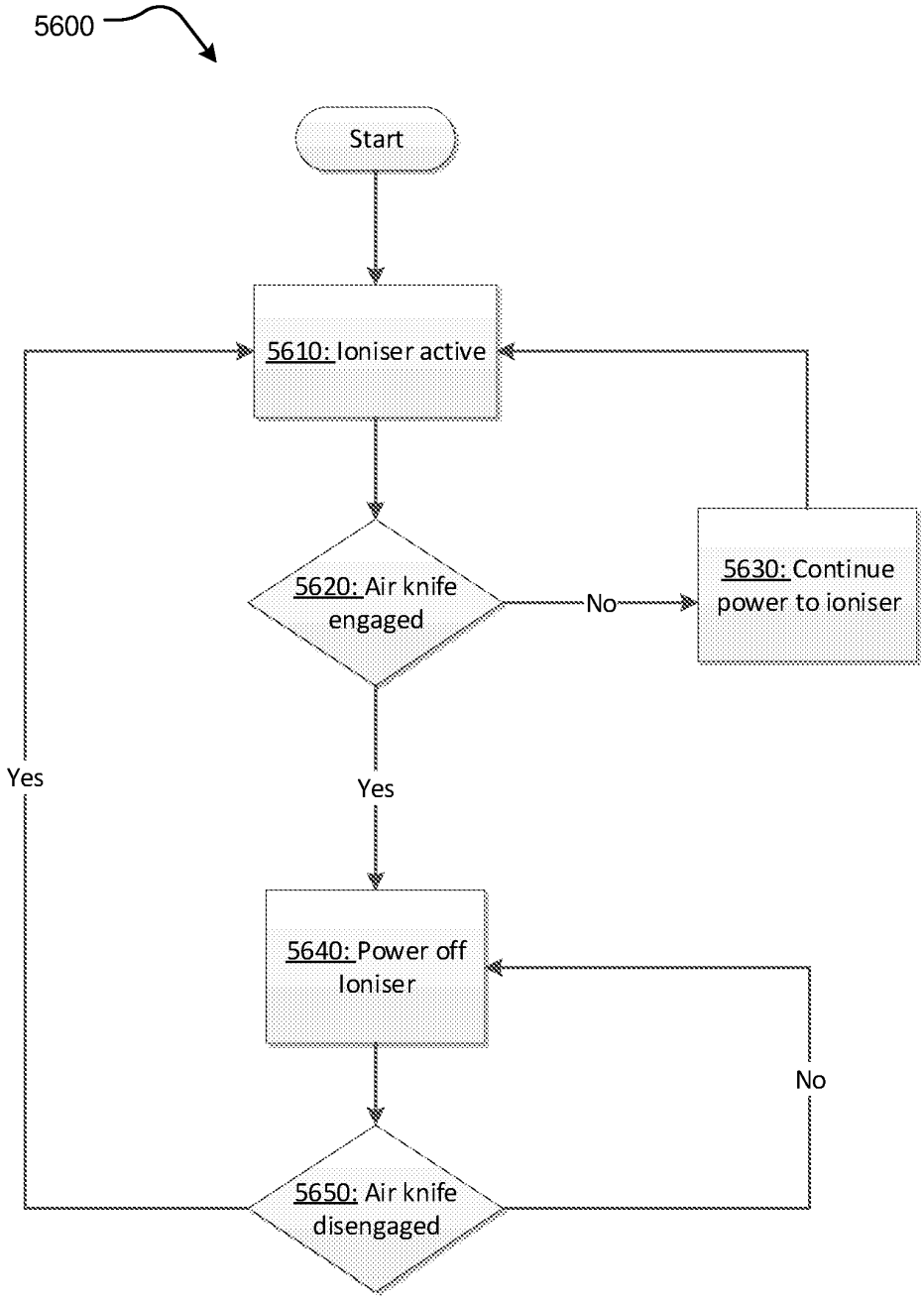
5600
Start
5610: Ioniser active
5620: Air knife engaged
No
5630: Continue power to ioniser
Yes
Yes
5640: Power off Ioniser
No
5650: Air knife disengaged

Figure 56

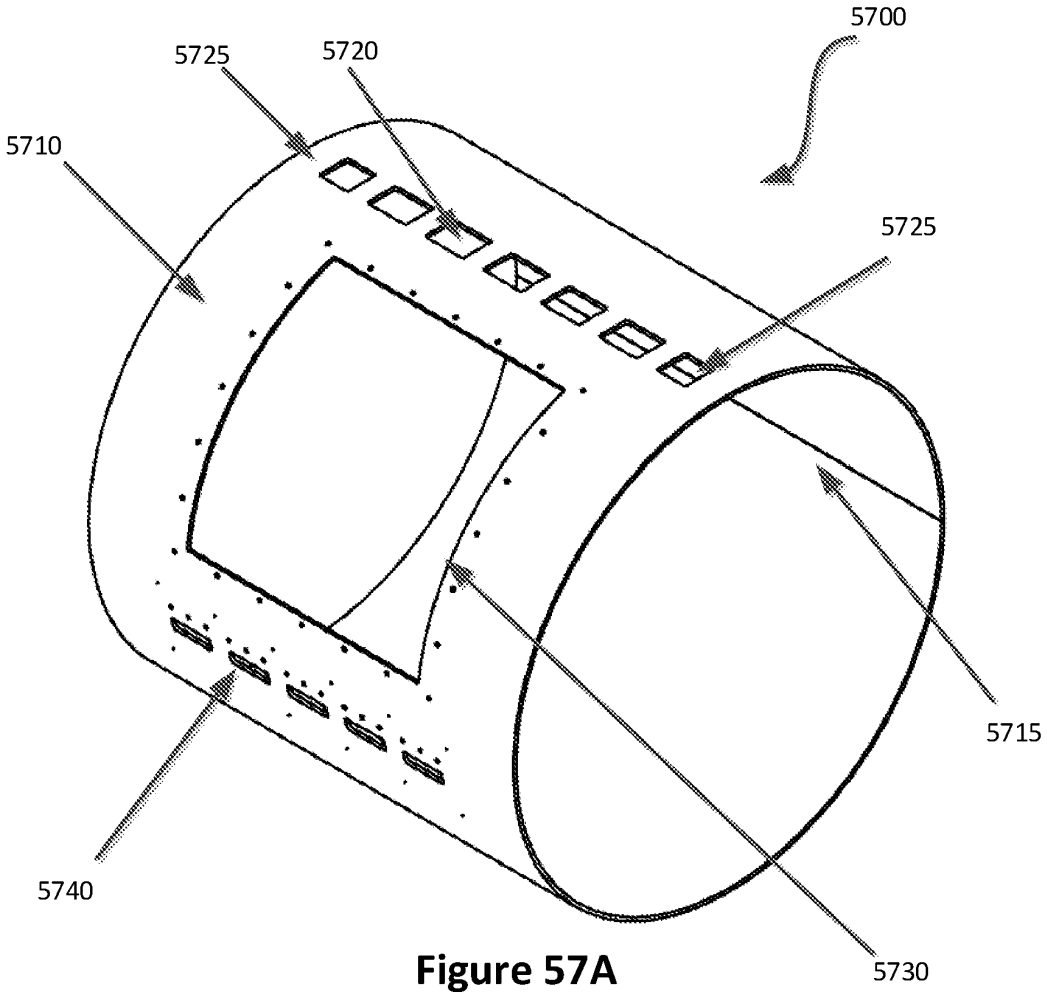

Figure 57A

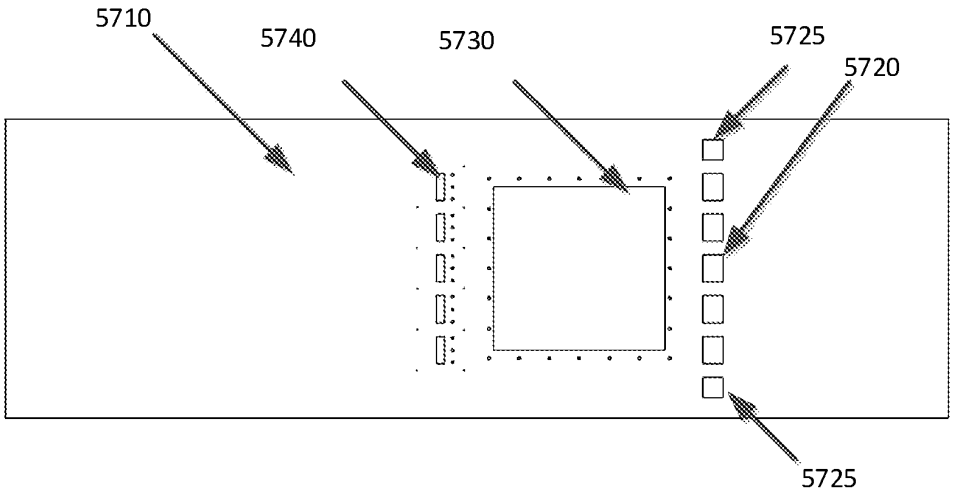

Figure 57B

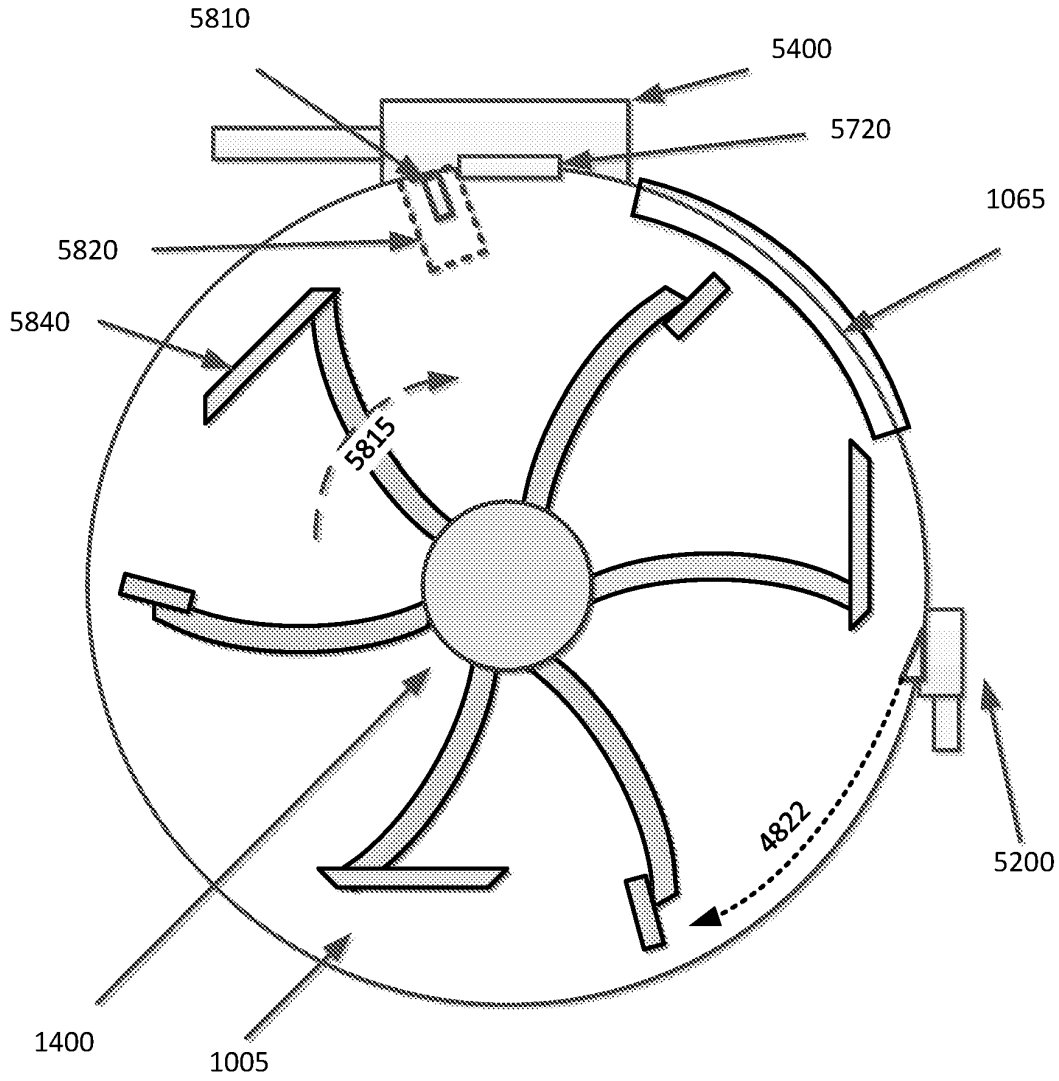

Figure 58