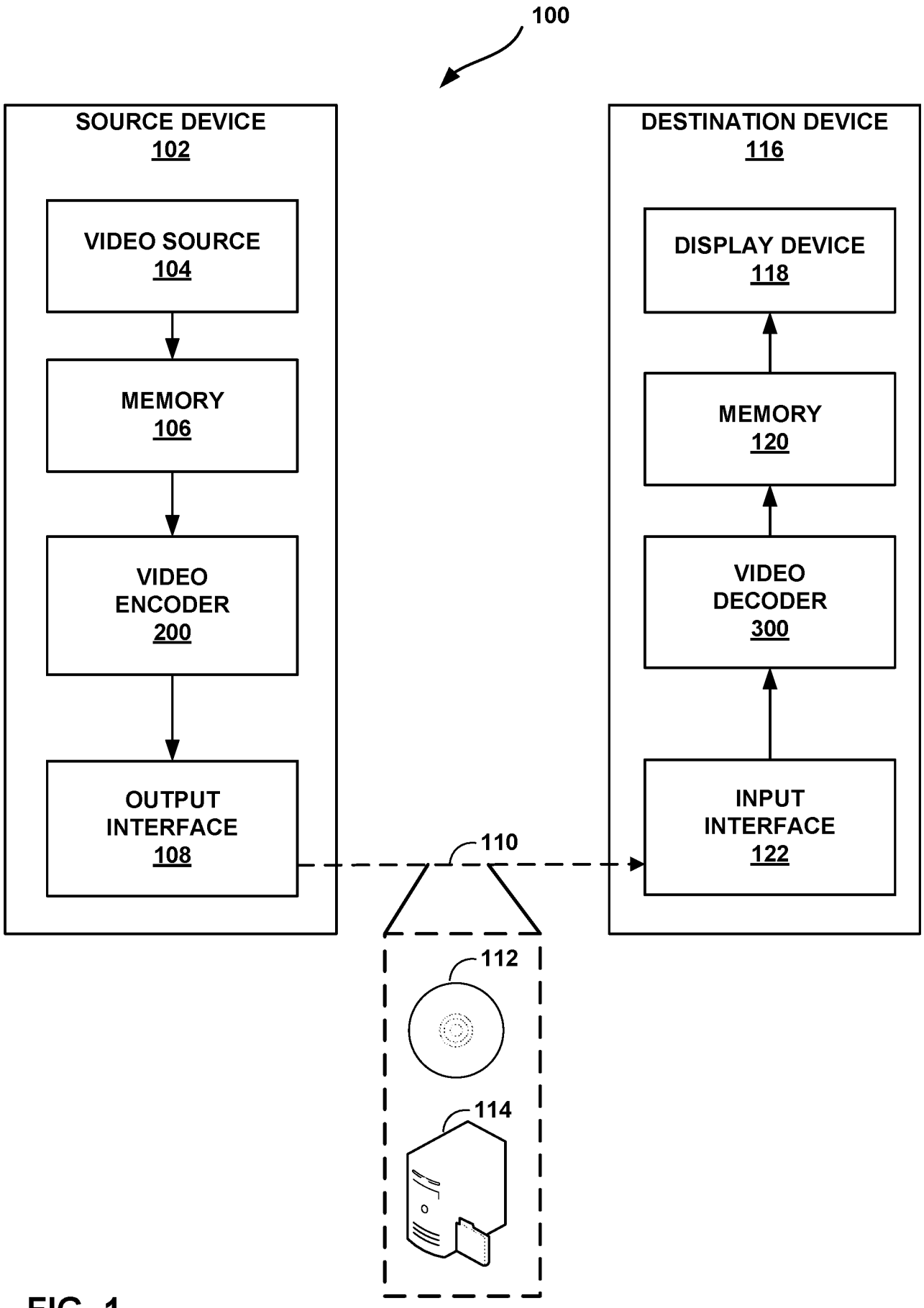
100
SOURCE DEVICE
102
VIDEO SOURCE
104
MEMORY
106
VIDEO
ENCODER
200
OUTPUT
INTERFACE
108
DESTINATION DEVICE
116
DISPLAY DEVICE
118
MEMORY
120
VIDEO
DECODER
300
INPUT
INTERFACE
122
110
112
114

FIG. 1

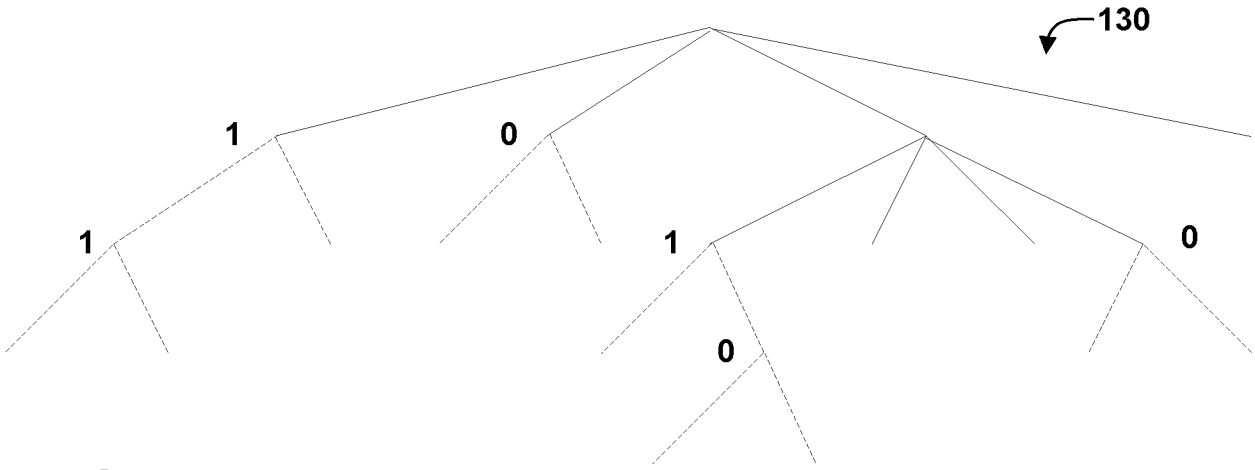

FIG. 2A

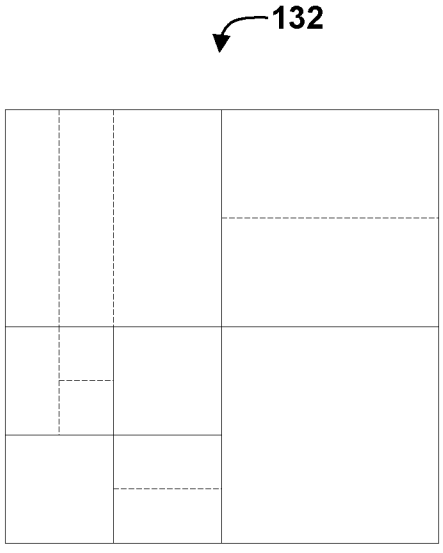

FIG. 2B

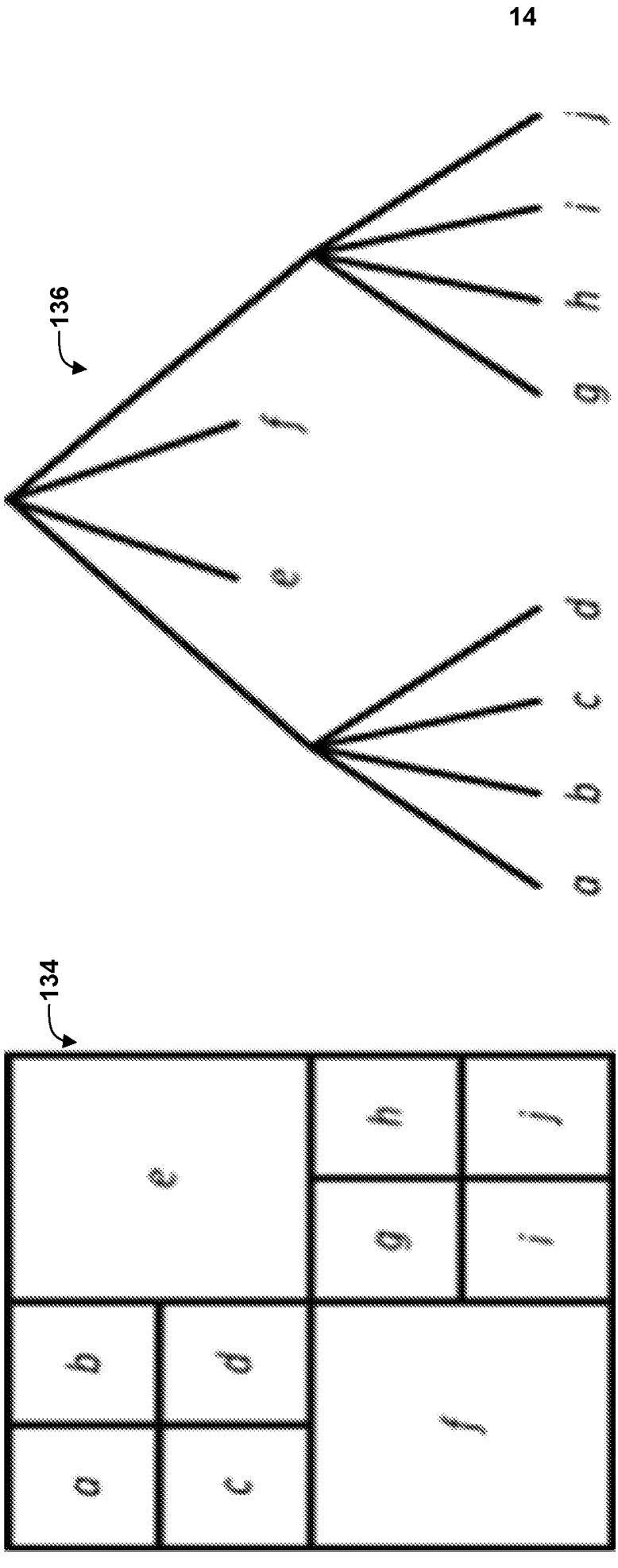

FIG. 3B

FIG. 3A

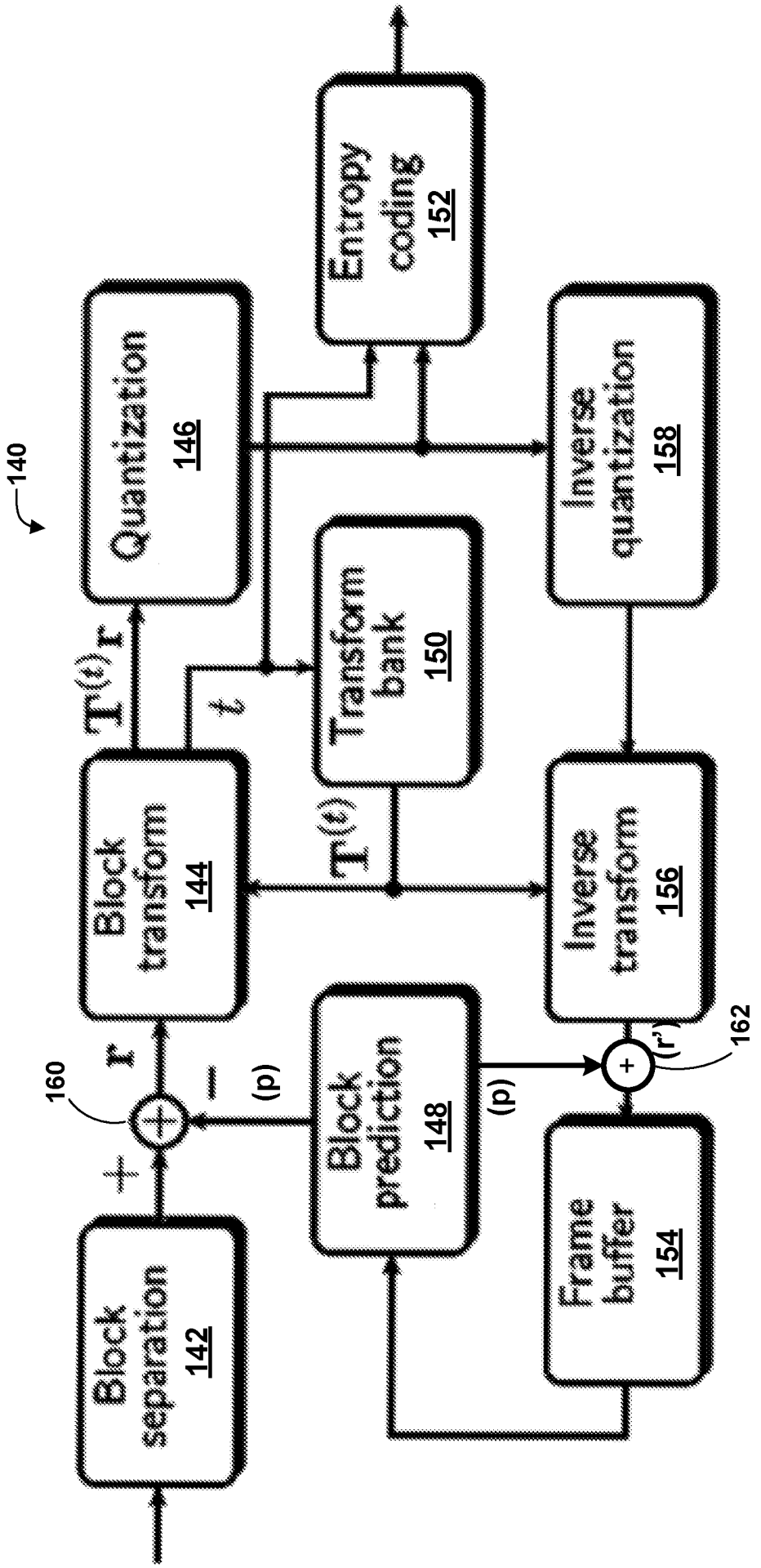
140
Block separation 142
Block transform 144
Quantization 146
Entropy coding 152
Transform bank 150
Inverse quantization 158
Inverse transform 156
Block prediction 148
Frame buffer 154
160
162
r
(p)
(r')
t
T(t)r
T(t)

FIG. 4

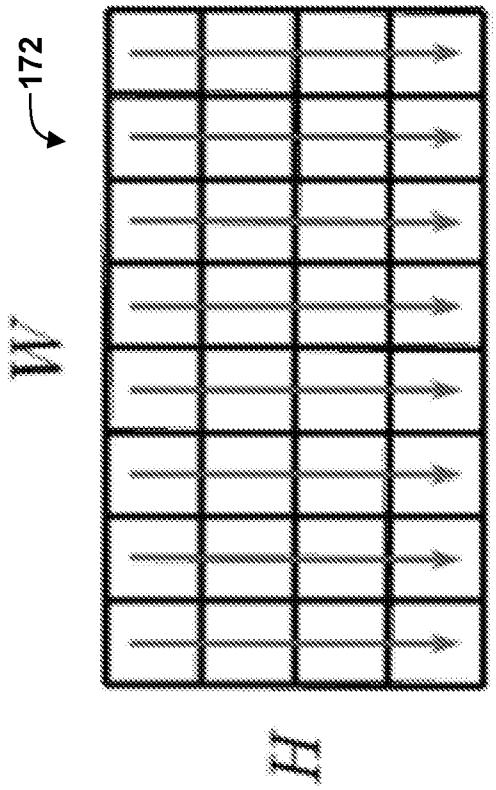
172
W
H
W vertical transforms

FIG. 5B

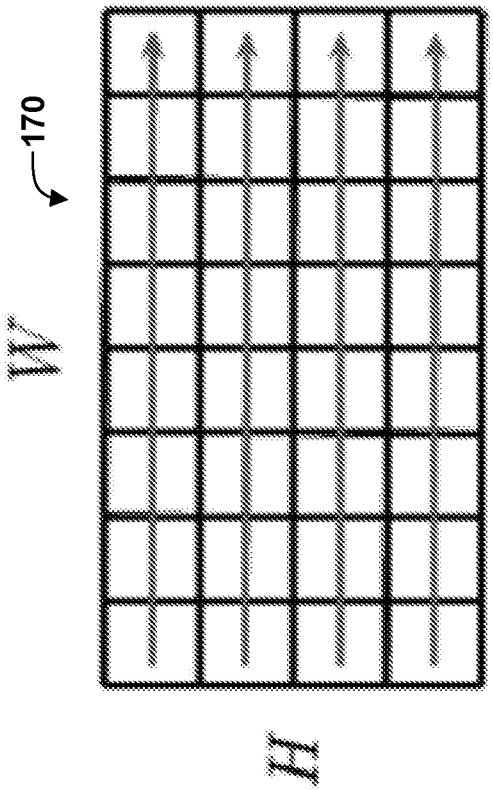
170
W
H
H horizontal transforms

FIG. 5A

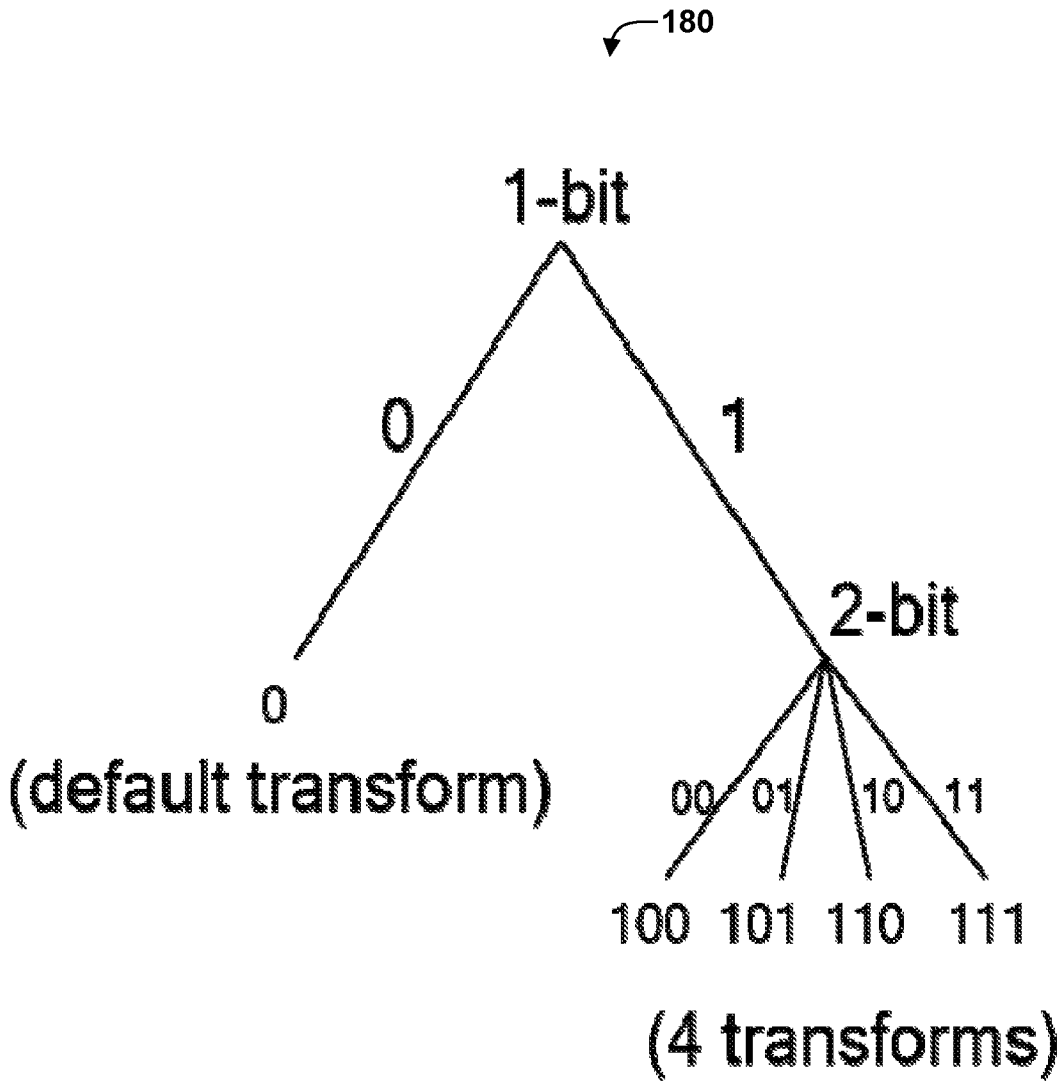
180
1-bit
0
1
2-bit
0
(default transform)
00
01
10
11
100
101
110
111
(4 transforms)

FIG. 6

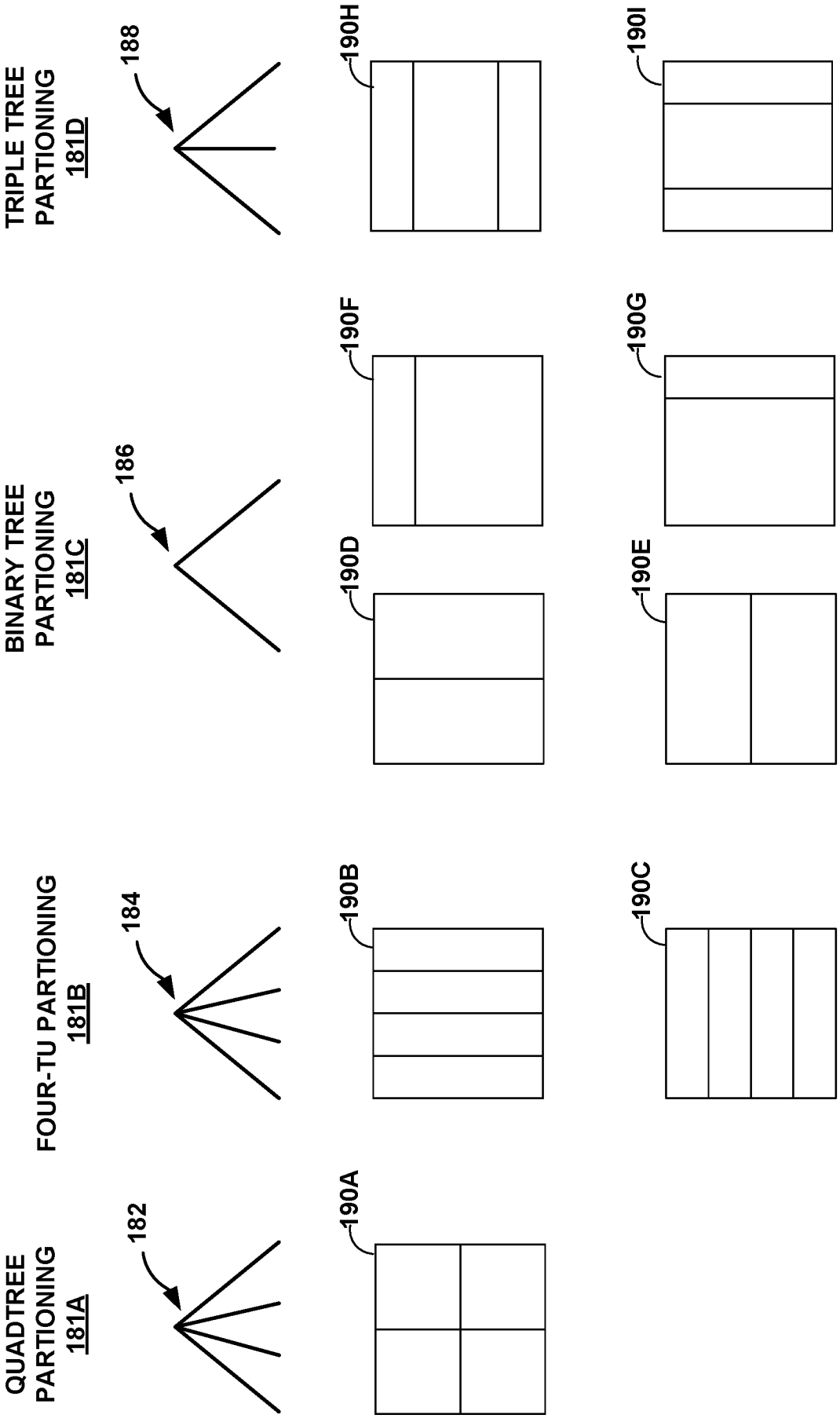
QUADTREE PARTIONING 181A
182
190A
FOUR-TU PARTIONING 181B
184
190B
190C
BINARY TREE PARTIONING 181C
186
190D
190E
190F
190G
TRIPLE TREE PARTIONING 181D
188
190H
190I

FIG. 7

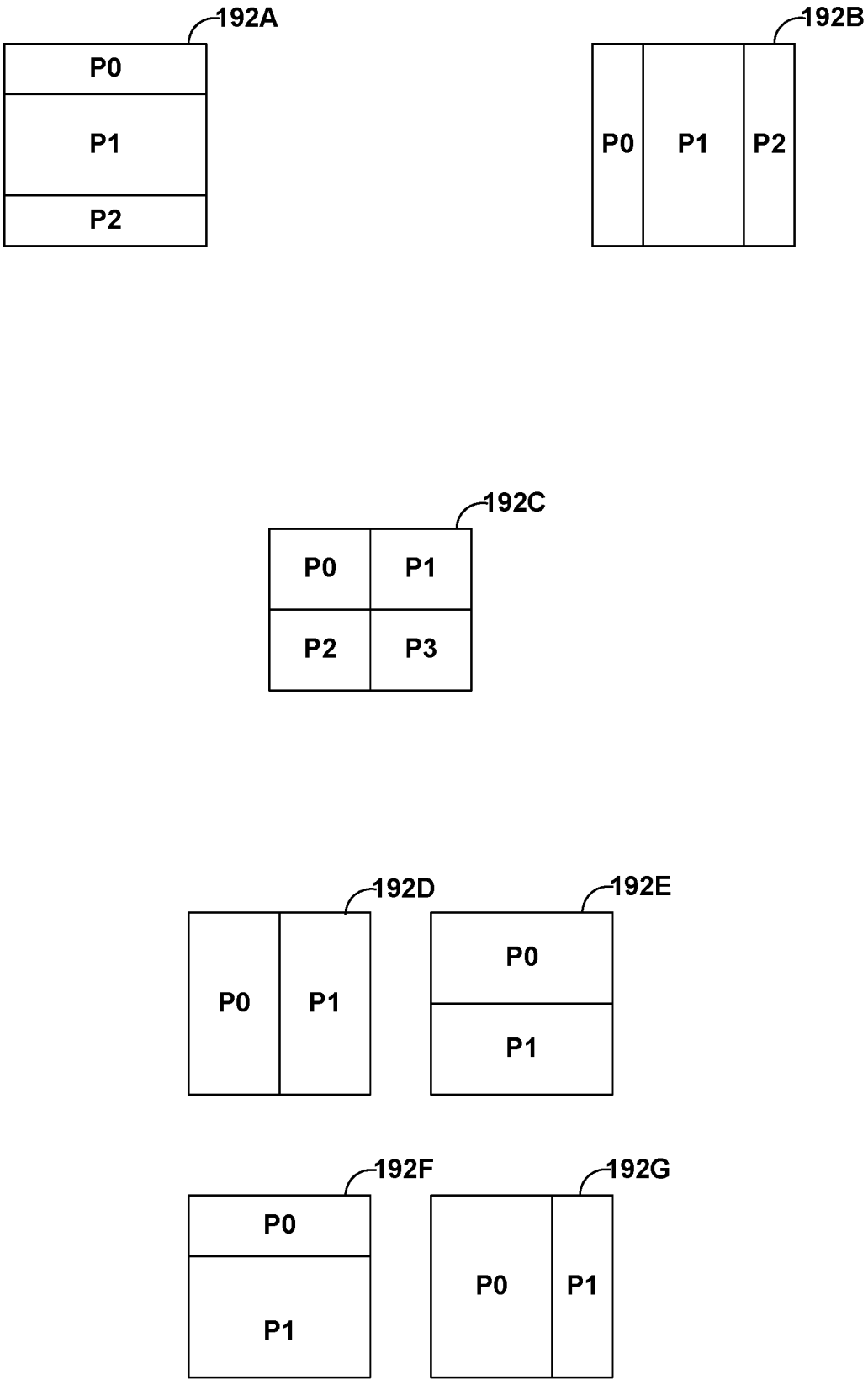
192A
P0
P1
P2
192B
P0
P1
P2
192C
P0
P1
P2
P3
192D
P0
P1
192E
P0
P1
192F
P0
P1
192G
P0
P1

FIG. 8

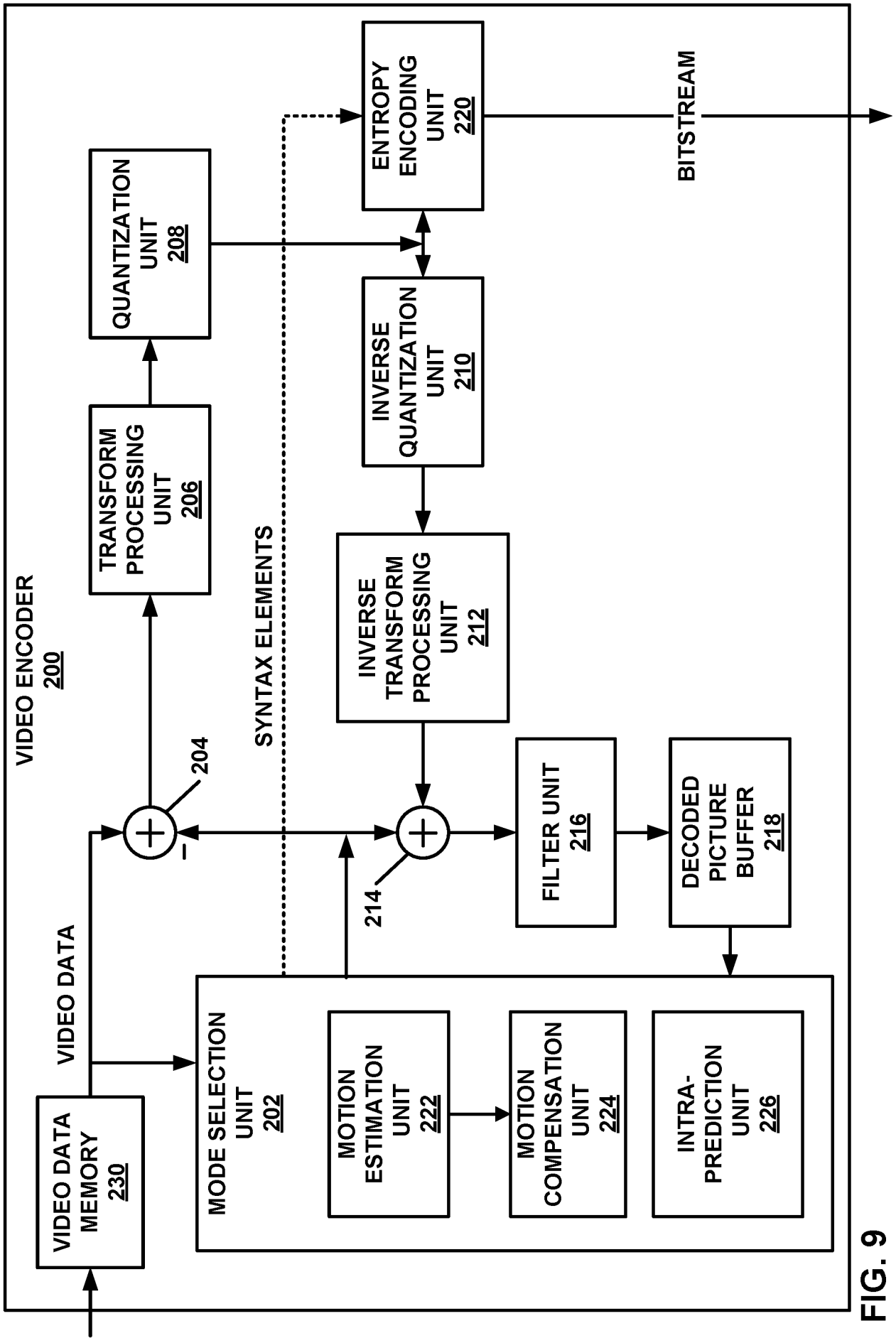
VIDEO ENCODER
200
VIDEO DATA MEMORY
230
VIDEO DATA
MODE SELECTION UNIT
202
MOTION ESTIMATION UNIT
222
MOTION COMPENSATION UNIT
224
INTRA-PREDICTION UNIT
226
204
214
SYNTAX ELEMENTS
TRANSFORM PROCESSING UNIT
206
QUANTIZATION UNIT
208
INVERSE QUANTIZATION UNIT
210
INVERSE TRANSFORM PROCESSING UNIT
212
FILTER UNIT
216
DECODED PICTURE BUFFER
218
ENTROPY ENCODING UNIT
220
BITSTREAM

FIG. 9

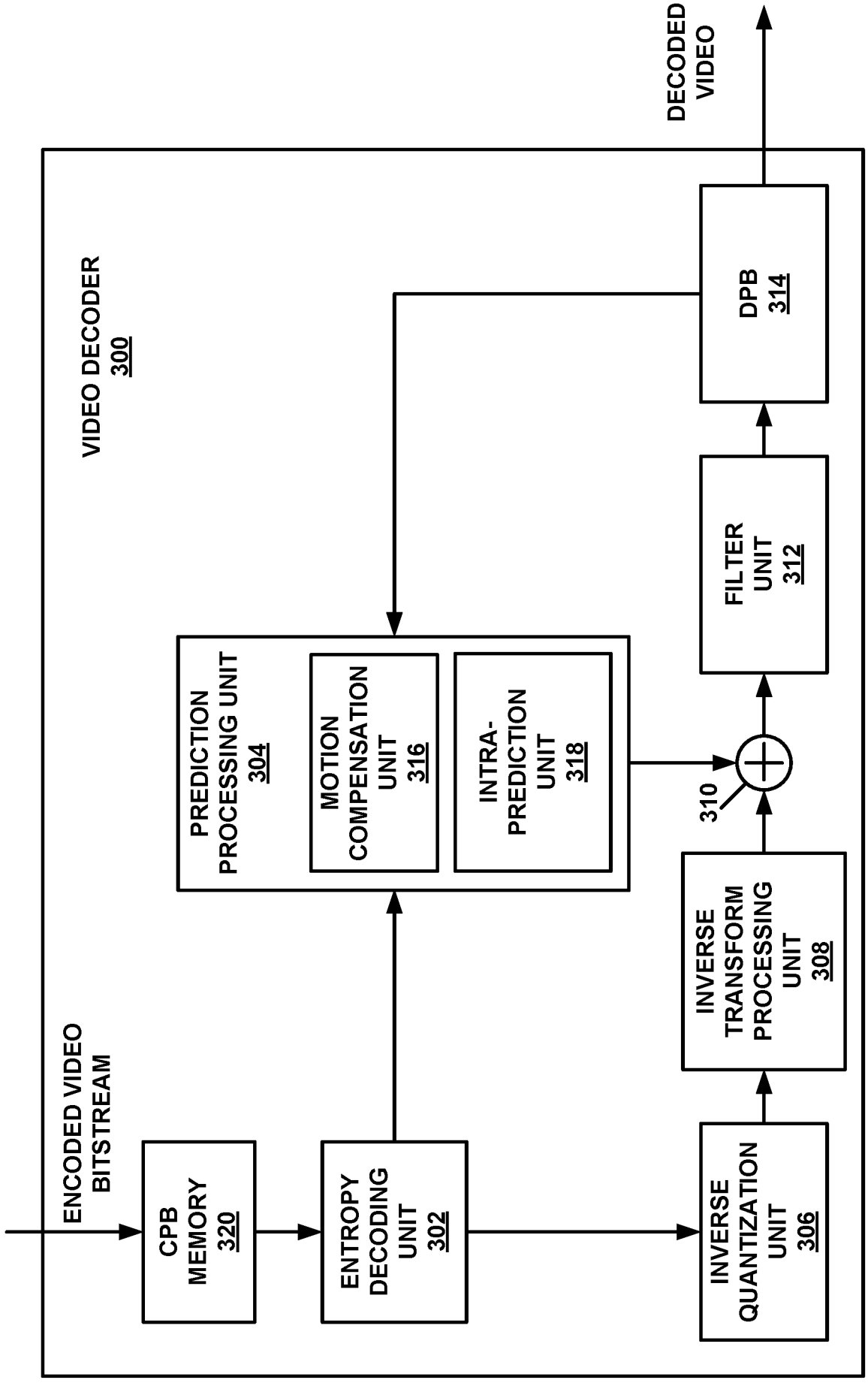
DECODED VIDEO
VIDEO DECODER 300
DPB 314
FILTER UNIT 312
PREDICTION PROCESSING UNIT 304
MOTION COMPENSATION UNIT 316
INTRA-PREDICTION UNIT 318
310
INVERSE TRANSFORM PROCESSING UNIT 308
INVERSE QUANTIZATION UNIT 306
ENTROPY DECODING UNIT 302
CPB MEMORY 320
ENCODED VIDEO BITSTREAM

FIG. 10

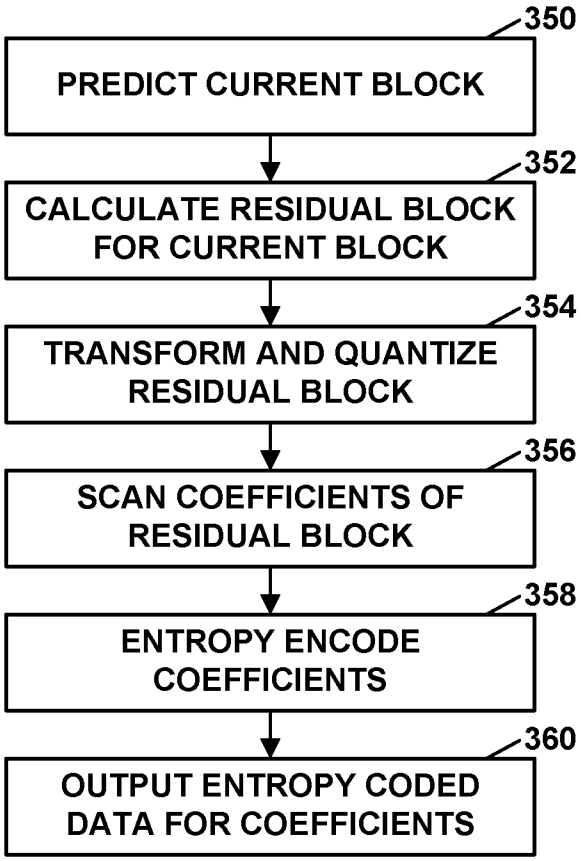
350
PREDICT CURRENT BLOCK
352
CALCULATE RESIDUAL BLOCK FOR CURRENT BLOCK
354
TRANSFORM AND QUANTIZE RESIDUAL BLOCK
356
SCAN COEFFICIENTS OF RESIDUAL BLOCK
358
ENTROPY ENCODE COEFFICIENTS
360
OUTPUT ENTROPY CODED DATA FOR COEFFICIENTS

FIG. 11

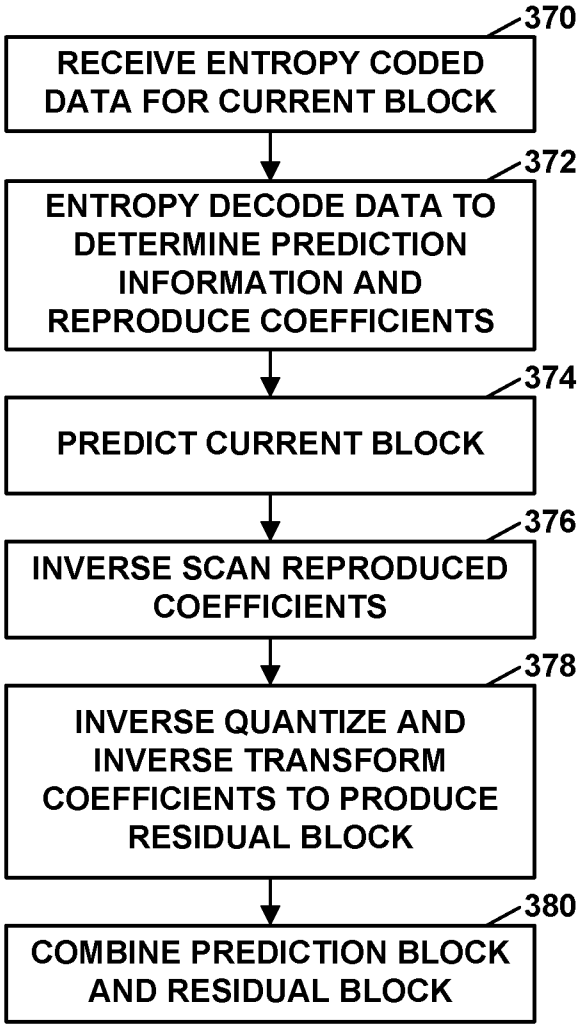
370
RECEIVE ENTROPY CODED DATA FOR CURRENT BLOCK
372
ENTROPY DECODE DATA TO DETERMINE PREDICTION INFORMATION AND REPRODUCE COEFFICIENTS
374
PREDICT CURRENT BLOCK
376
INVERSE SCAN REPRODUCED COEFFICIENTS
378
INVERSE QUANTIZE AND INVERSE TRANSFORM COEFFICIENTS TO PRODUCE RESIDUAL BLOCK
380
COMBINE PREDICTION BLOCK AND RESIDUAL BLOCK

FIG. 12

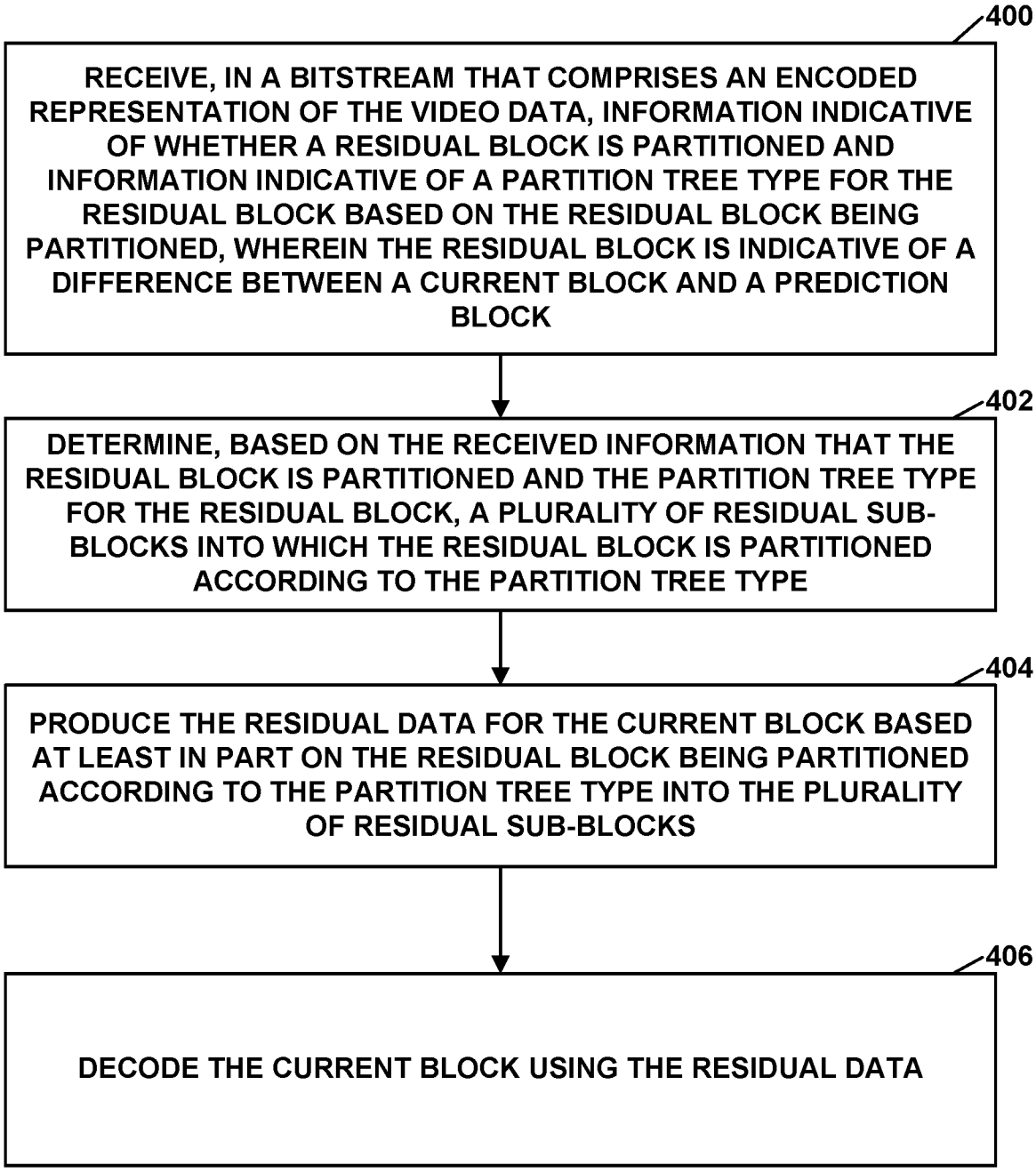
400
RECEIVE, IN A BITSTREAM THAT COMPRISES AN ENCODED REPRESENTATION OF THE VIDEO DATA, INFORMATION INDICATIVE OF WHETHER A RESIDUAL BLOCK IS PARTITIONED AND INFORMATION INDICATIVE OF A PARTITION TREE TYPE FOR THE RESIDUAL BLOCK BASED ON THE RESIDUAL BLOCK BEING PARTITIONED, WHEREIN THE RESIDUAL BLOCK IS INDICATIVE OF A DIFFERENCE BETWEEN A CURRENT BLOCK AND A PREDICTION BLOCK
402
DETERMINE, BASED ON THE RECEIVED INFORMATION THAT THE RESIDUAL BLOCK IS PARTITIONED AND THE PARTITION TREE TYPE FOR THE RESIDUAL BLOCK, A PLURALITY OF RESIDUAL SUB-BLOCKS INTO WHICH THE RESIDUAL BLOCK IS PARTITIONED ACCORDING TO THE PARTITION TREE TYPE
404
PRODUCE THE RESIDUAL DATA FOR THE CURRENT BLOCK BASED AT LEAST IN PART ON THE RESIDUAL BLOCK BEING PARTITIONED ACCORDING TO THE PARTITION TREE TYPE INTO THE PLURALITY OF RESIDUAL SUB-BLOCKS
406
DECODE THE CURRENT BLOCK USING THE RESIDUAL DATA

FIG. 13

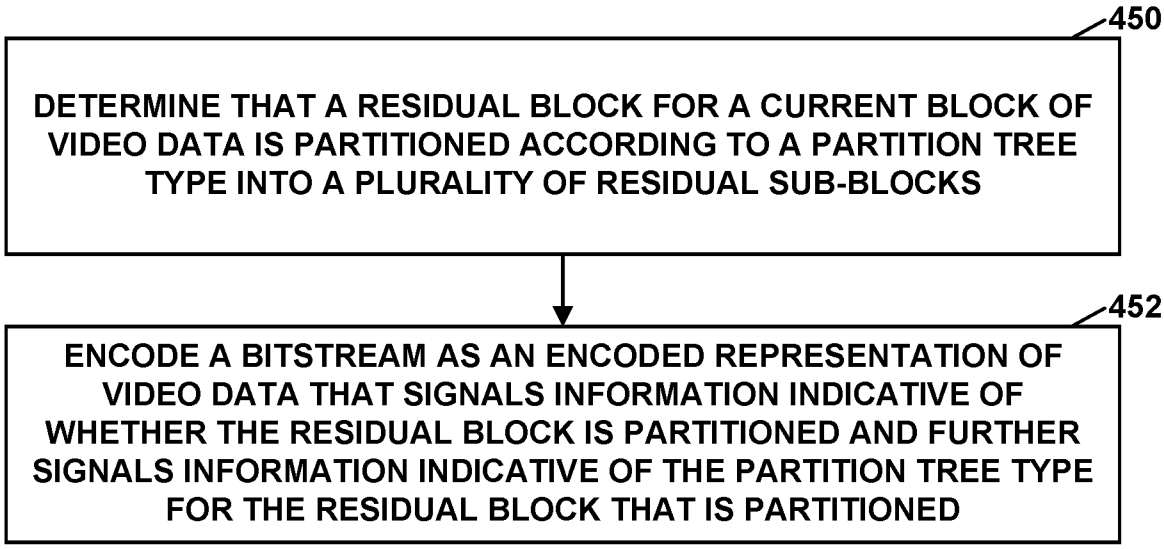
450
DETERMINE THAT A RESIDUAL BLOCK FOR A CURRENT BLOCK OF VIDEO DATA IS PARTITIONED ACCORDING TO A PARTITION TREE TYPE INTO A PLURALITY OF RESIDUAL SUB-BLOCKS
452
ENCODE A BITSTREAM AS AN ENCODED REPRESENTATION OF VIDEO DATA THAT SIGNALS INFORMATION INDICATIVE OF WHETHER THE RESIDUAL BLOCK IS PARTITIONED AND FURTHER SIGNALS INFORMATION INDICATIVE OF THE PARTITION TREE TYPE FOR THE RESIDUAL BLOCK THAT IS PARTITIONED

FIG. 14