FIG. 1

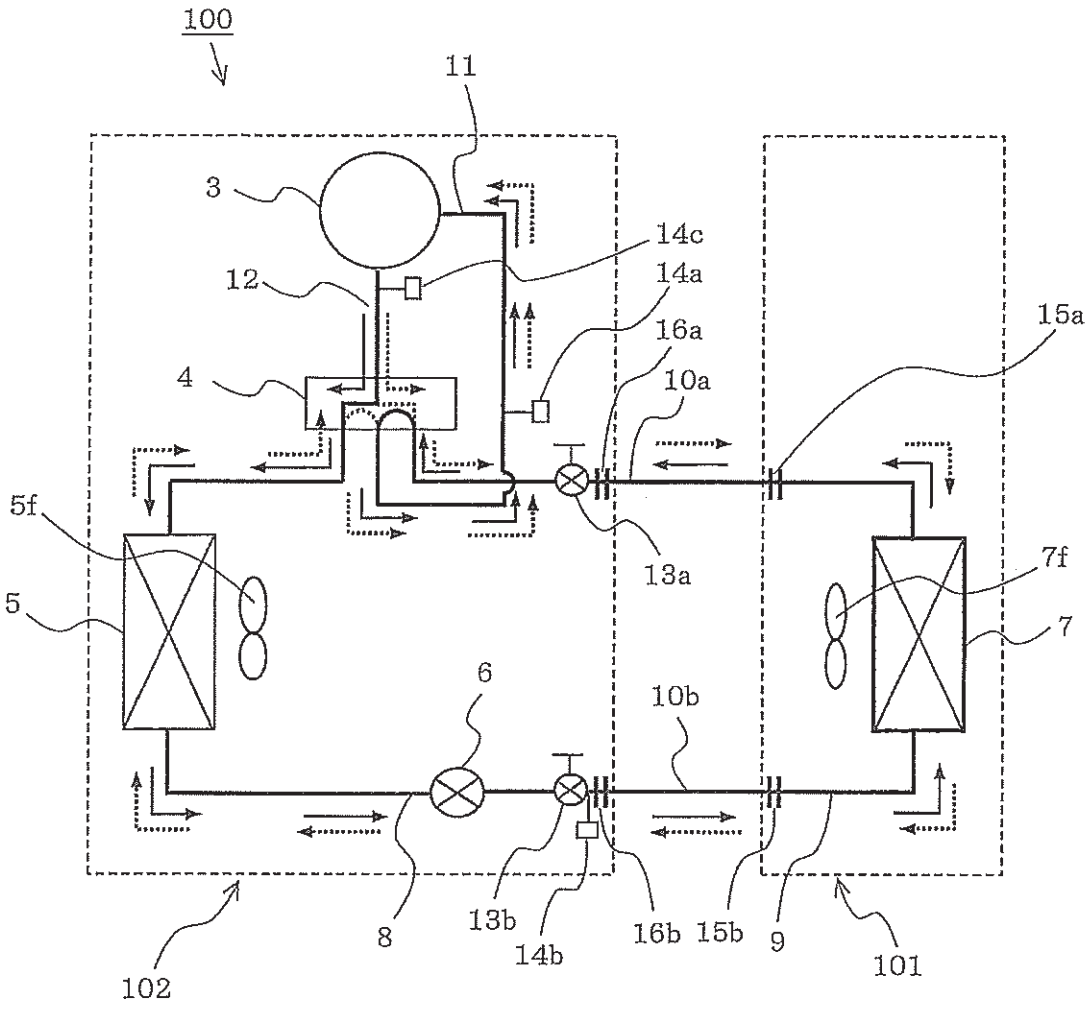
100
11
3
14c
12
14a
16a
15a
4
10a
5f
13a
7f
5
7
6
10b
8
13b
14b
16b
15b
9
101
102

FIG. 2

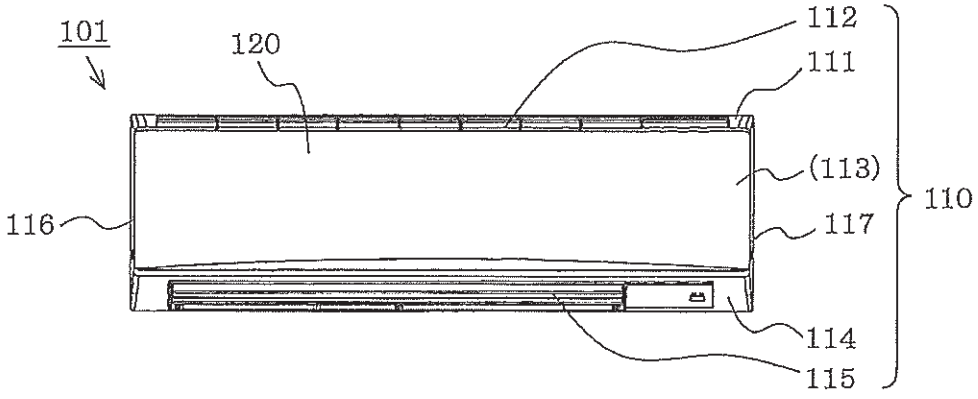
101
120
112
111
(113)
110
116
117
114
115

F I G. 3

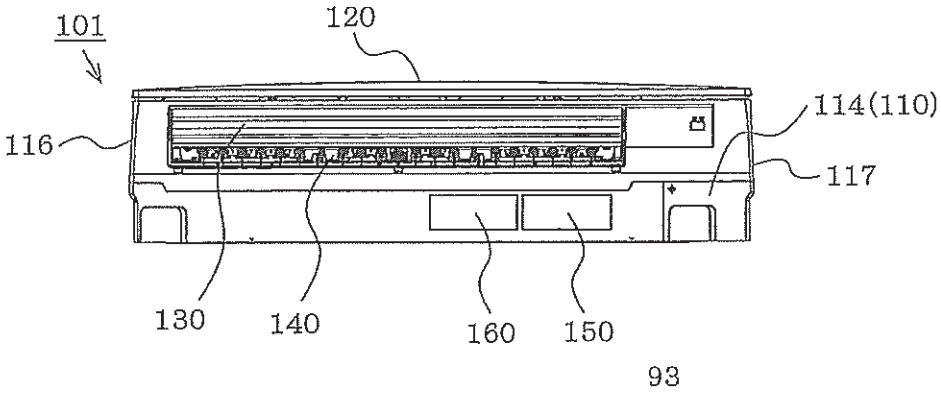

F I G. 4

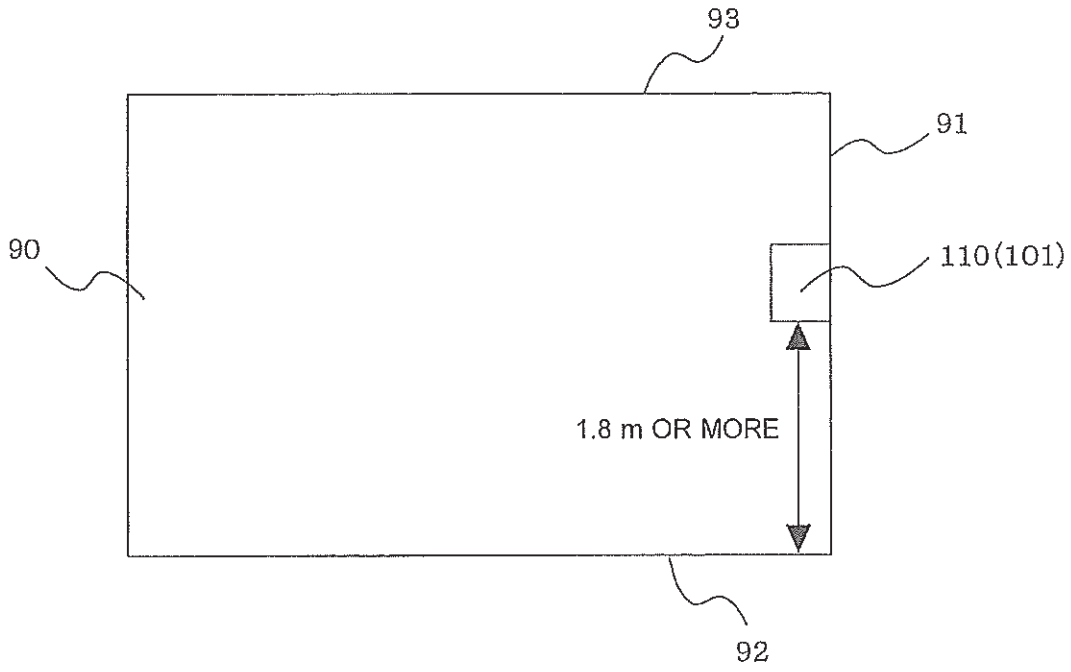

F I G. 5

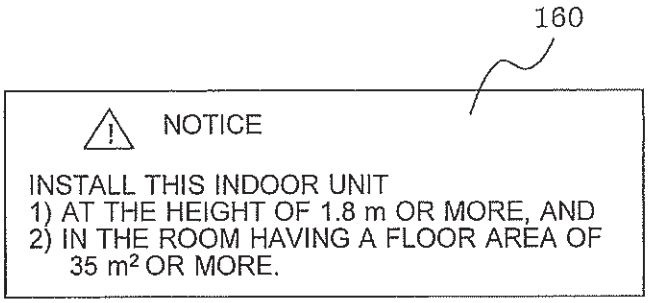

FIG. 6

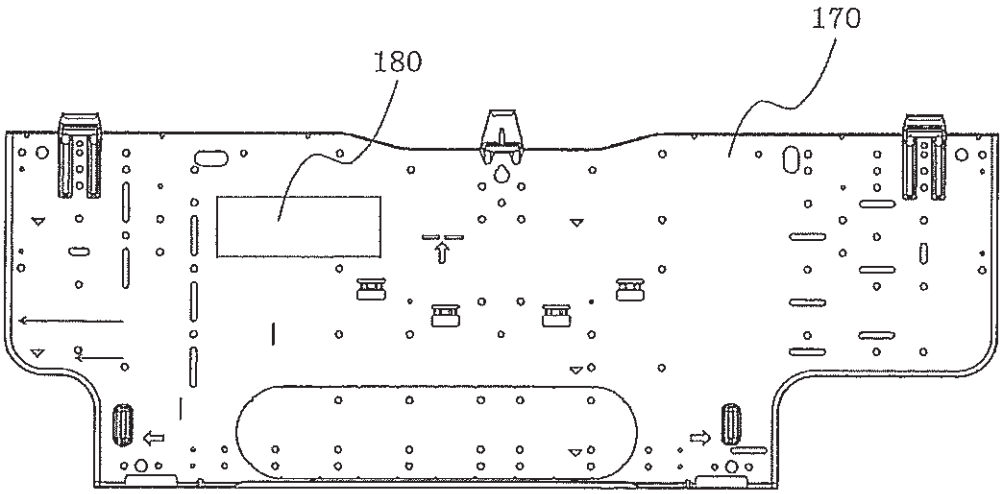

FIG. 7

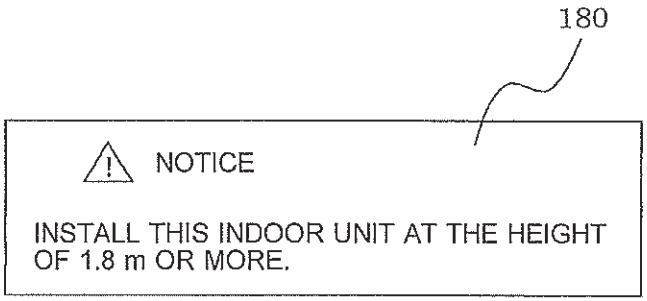

FIG. 8

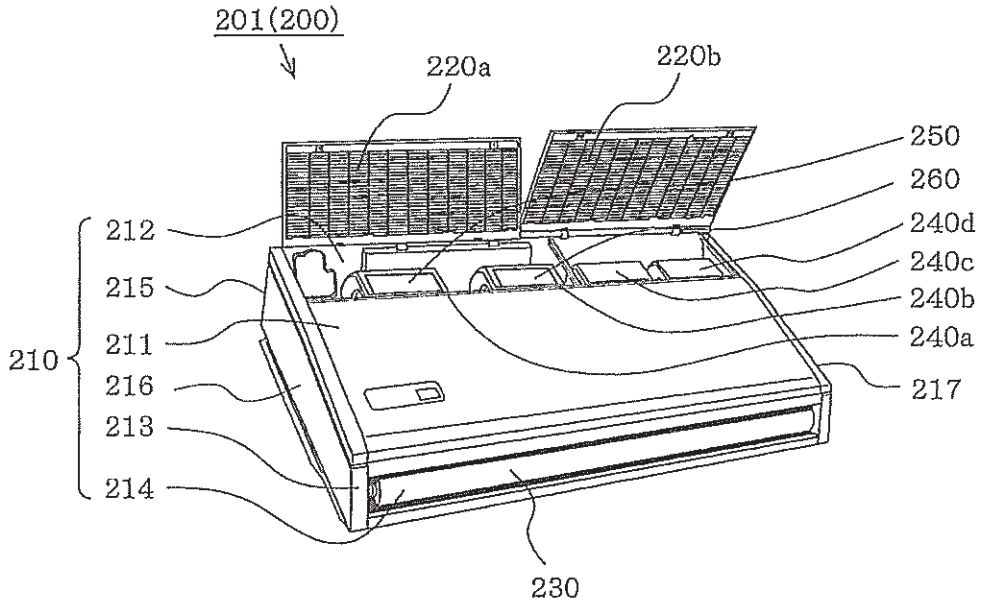

FIG. 9

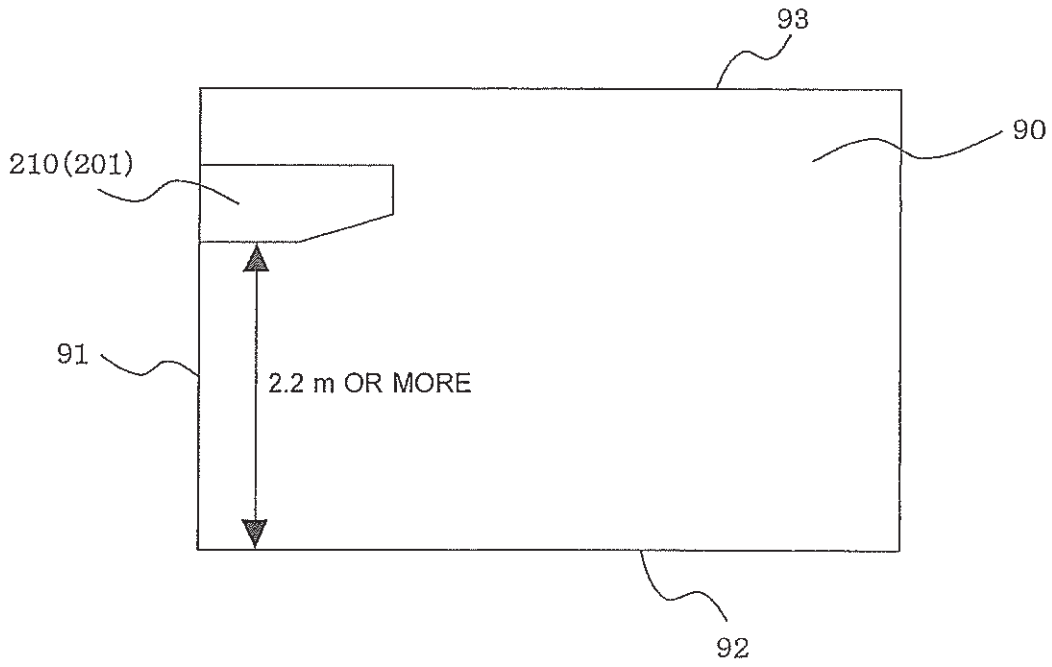
93
90
210(201)
91
2.2 m OR MORE
92

FIG. 10

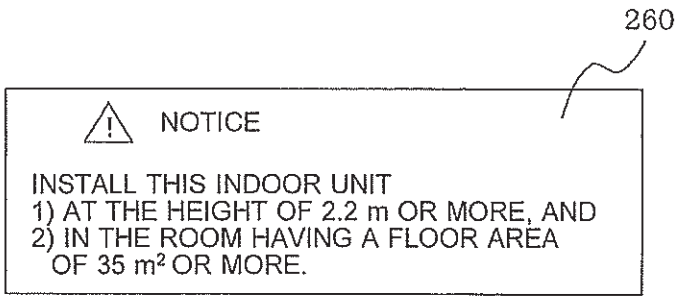
260
NOTICE
INSTALL THIS INDOOR UNIT
1) AT THE HEIGHT OF 2.2 m OR MORE, AND
2) IN THE ROOM HAVING A FLOOR AREA
OF 35 m² OR MORE.

F I G. 1 1

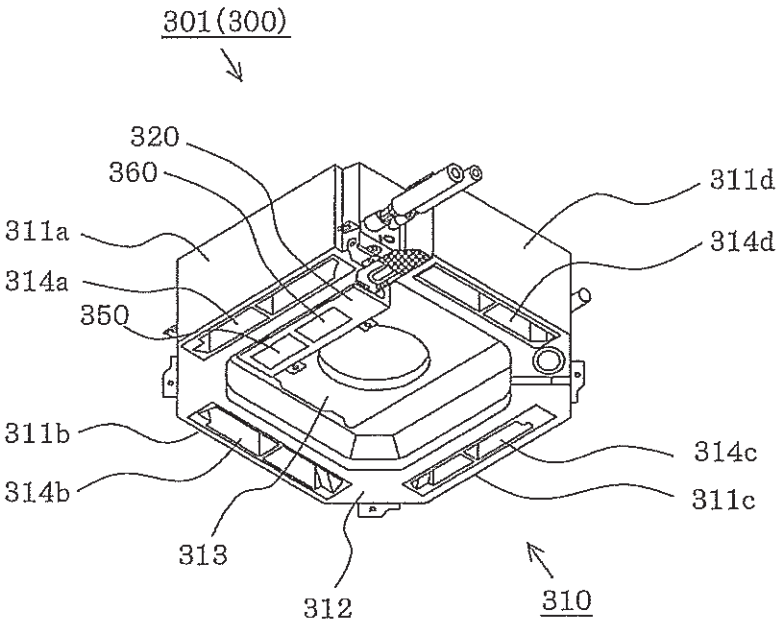
301(300)
320
360
311a
314a
350
311b
314b
313
312
310
311d
314d
314c
311c

F I G. 1 2

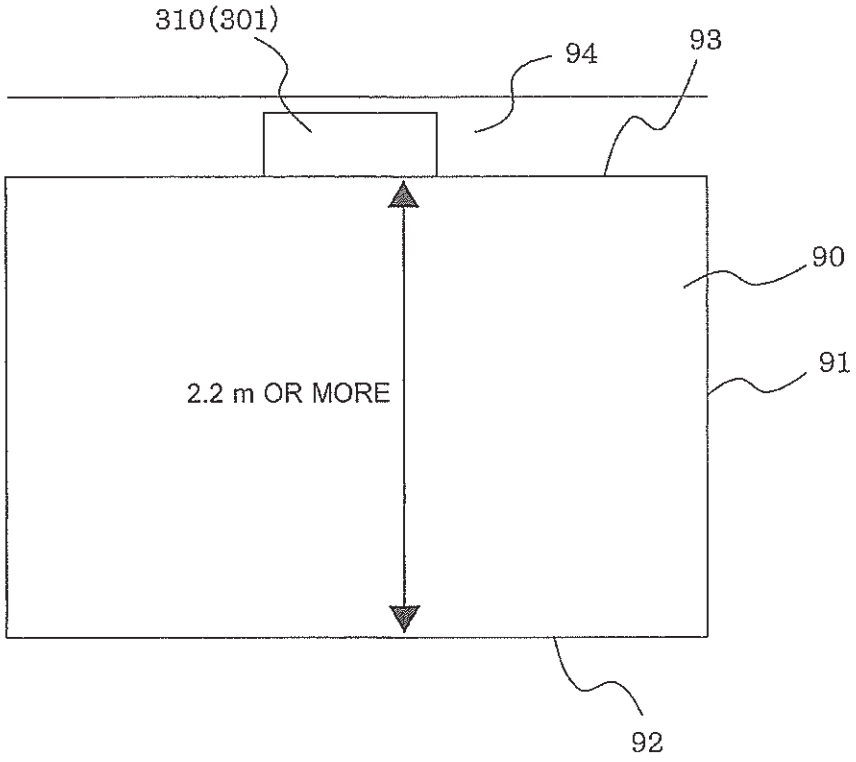
310(301)
94
93
90
91
2.2 m OR MORE
92