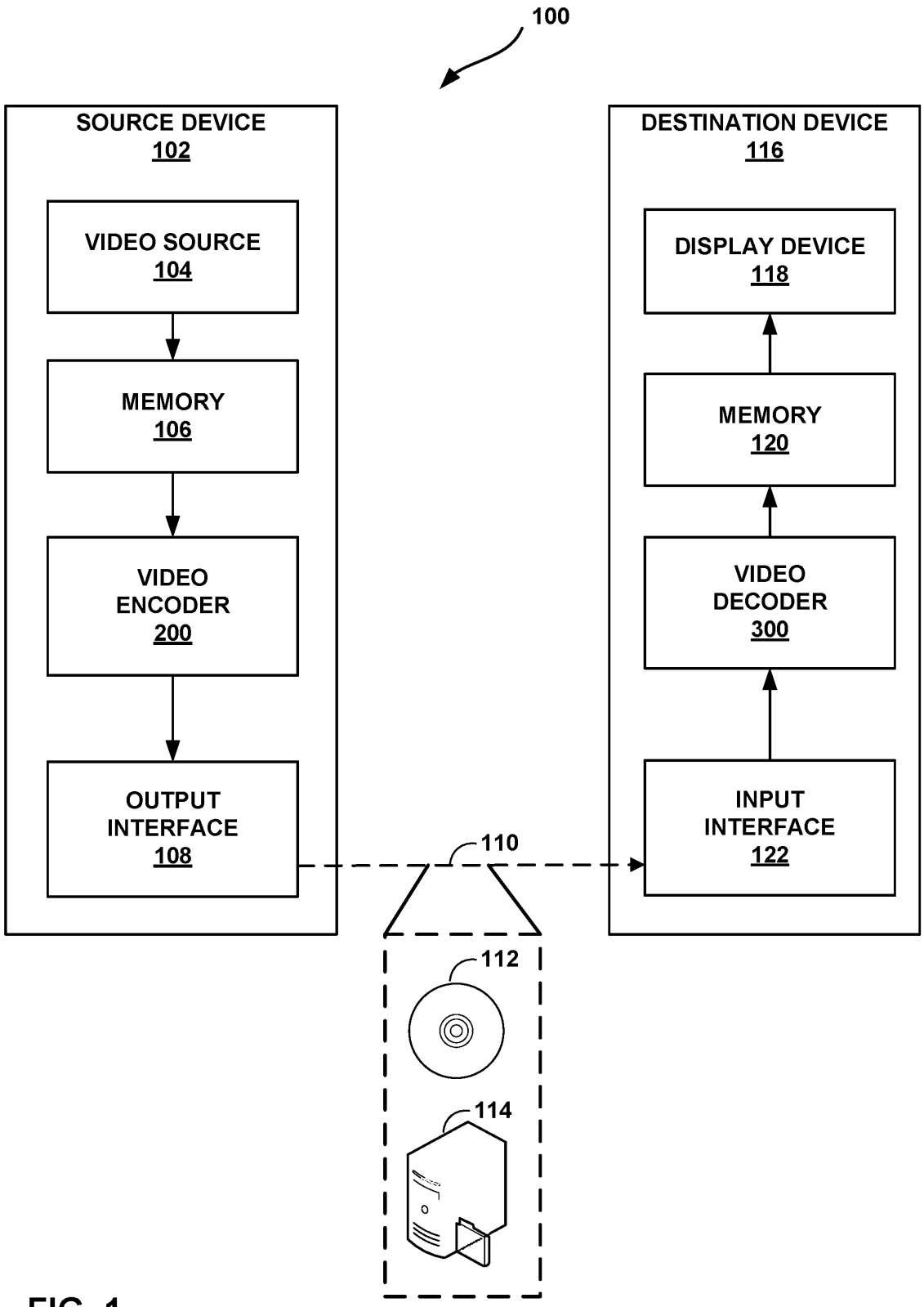
100
SOURCE DEVICE
102
VIDEO SOURCE
104
MEMORY
106
VIDEO
ENCODER
200
OUTPUT
INTERFACE
108
DESTINATION DEVICE
116
DISPLAY DEVICE
118
MEMORY
120
VIDEO
DECODER
300
INPUT
INTERFACE
122
110
112
114

FIG. 1

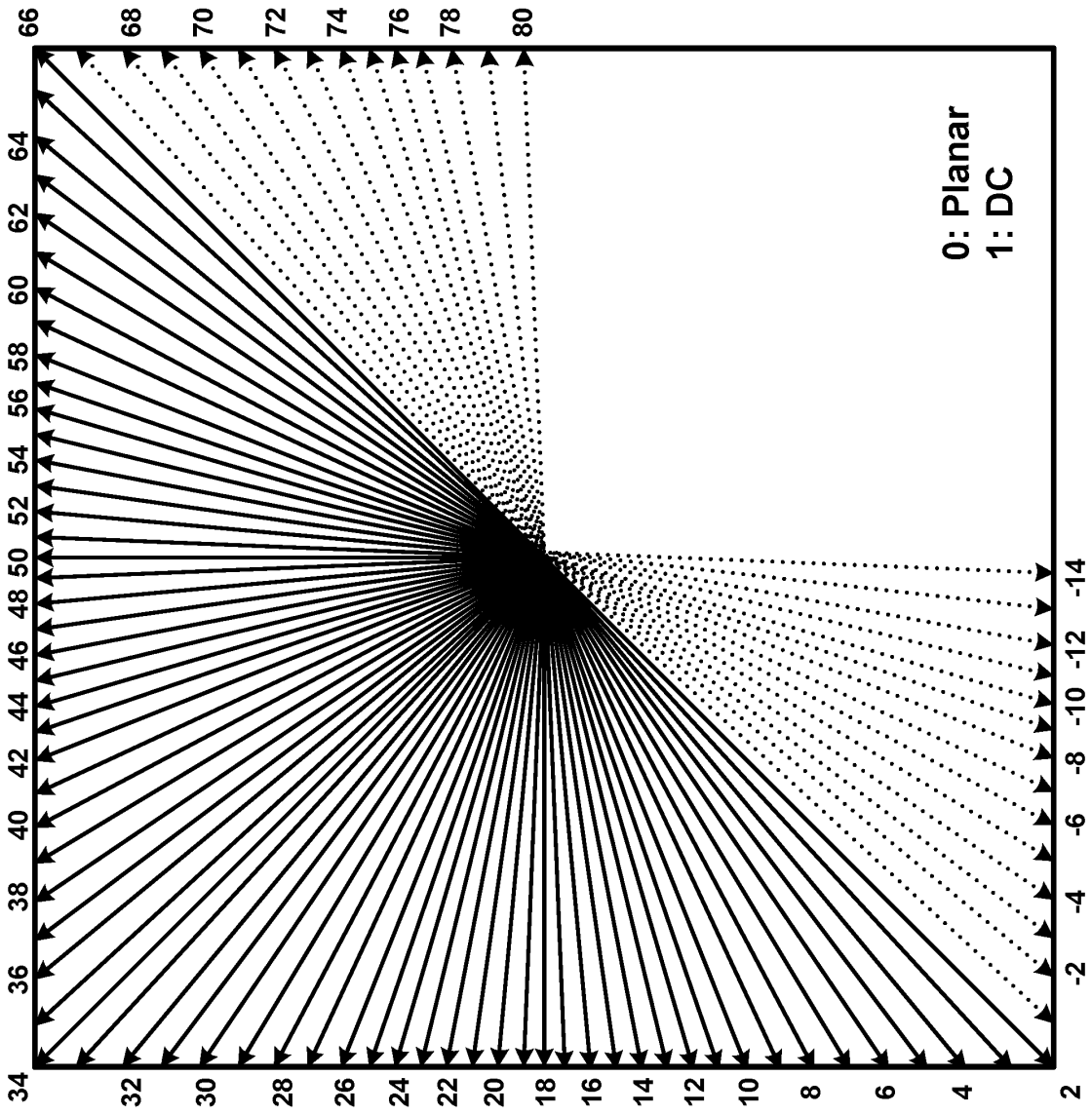
0: Planar
1: DC
66
68
70
72
74
76
78
80
64
62
60
58
56
54
52
50
48
46
44
42
40
38
36
34
32
30
28
26
24
22
20
18
16
14
12
10
8
6
4
2
-2
-4
-6
-8
-10
-12
-14

FIG. 2

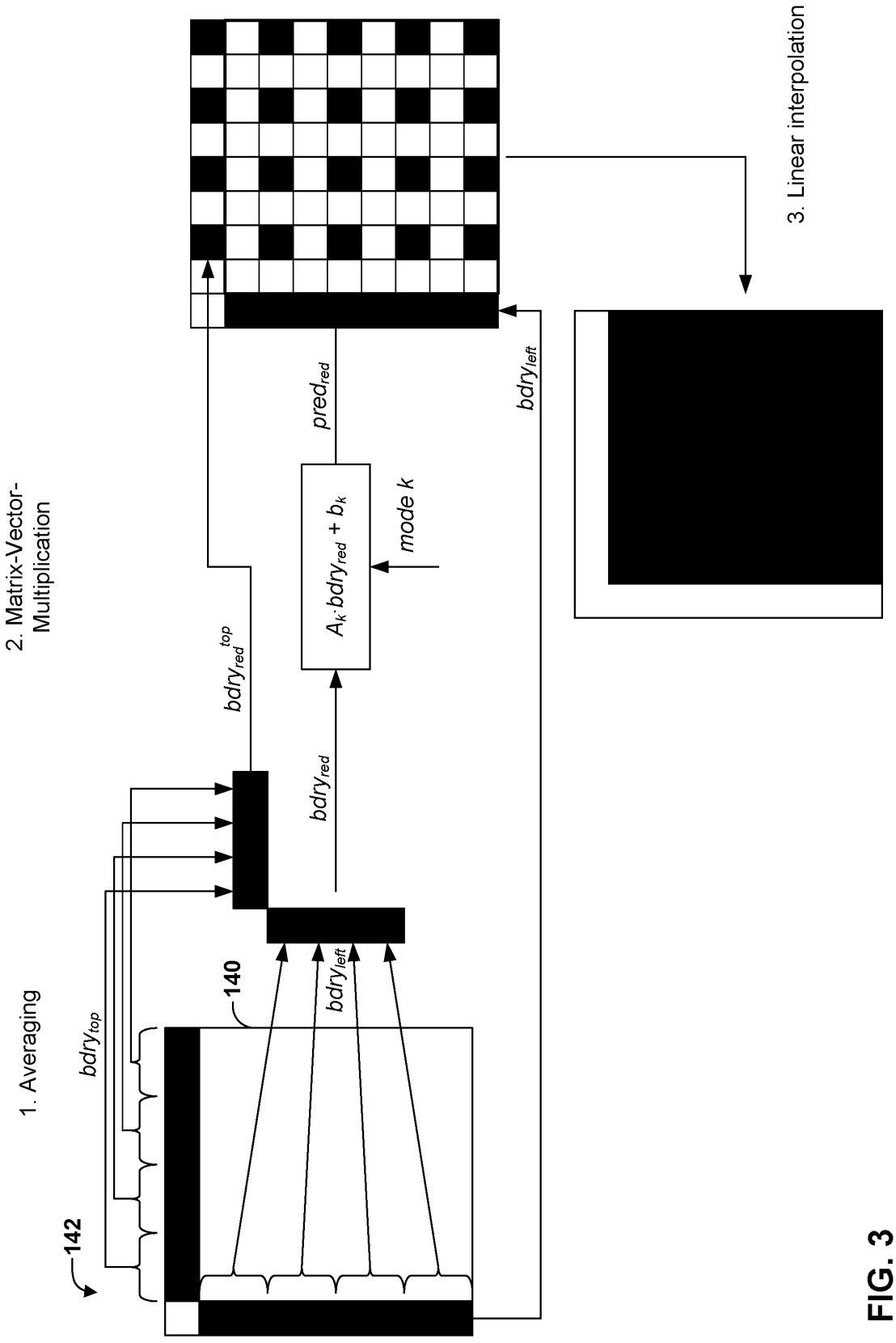
1. Averaging
2. Matrix-Vector-Multiplication
3. Linear interpolation
142
140
$bdry_{top}$
$bdry_{left}$
$bdry_{red}$
$bdry_{red}^{top}$
$A_k \cdot bdry_{red} + b_k$
mode k
$pred_{red}$
$bdry_{left}$

FIG. 3

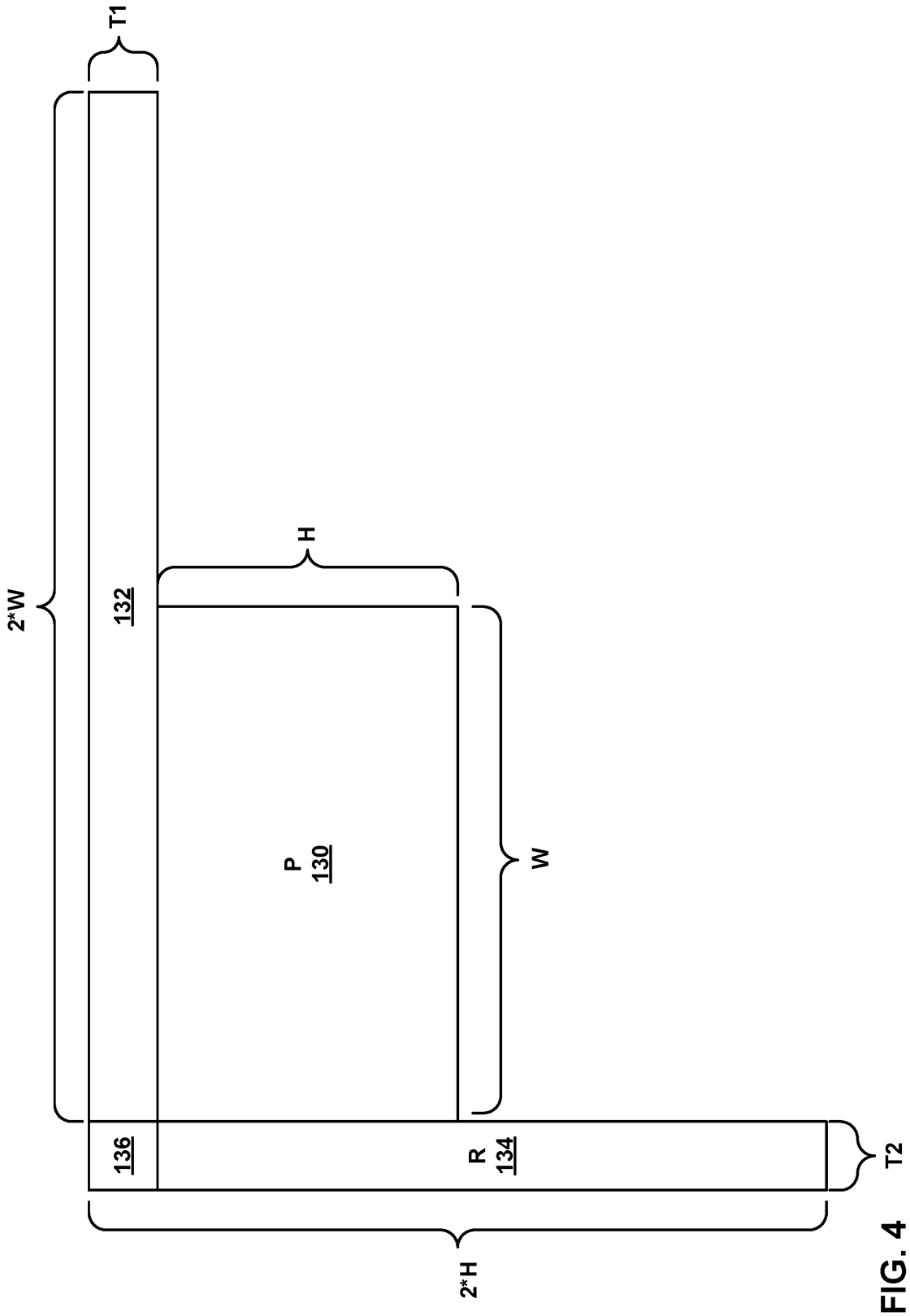

FIG. 4

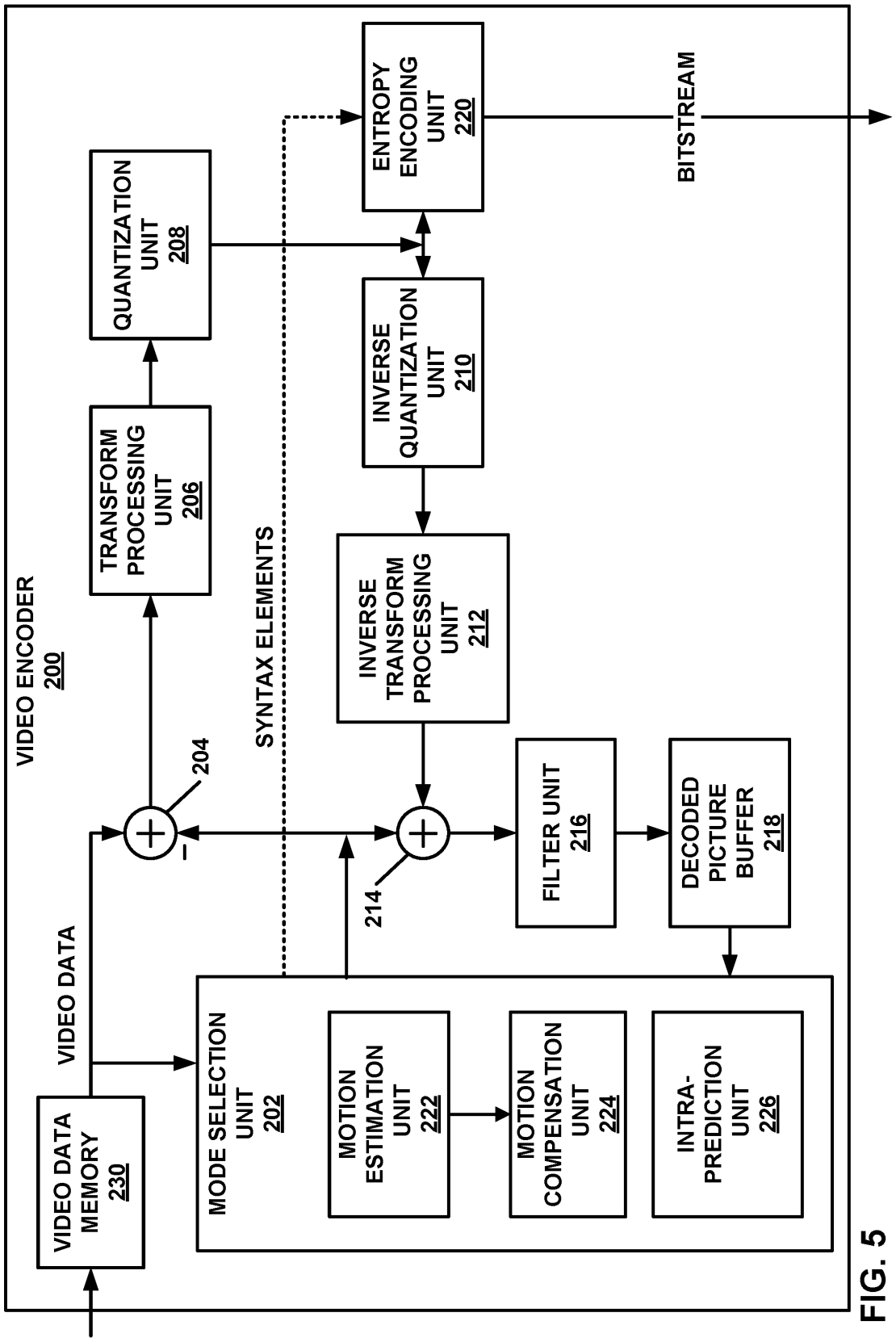
VIDEO ENCODER
200
VIDEO DATA MEMORY
230
VIDEO DATA
MODE SELECTION UNIT
202
MOTION ESTIMATION UNIT
222
MOTION COMPENSATION UNIT
224
INTRA-PREDICTION UNIT
226
204
214
SYNTAX ELEMENTS
TRANSFORM PROCESSING UNIT
206
QUANTIZATION UNIT
208
INVERSE QUANTIZATION UNIT
210
INVERSE TRANSFORM PROCESSING UNIT
212
FILTER UNIT
216
DECODED PICTURE BUFFER
218
ENTROPY ENCODING UNIT
220
BITSTREAM

FIG. 5

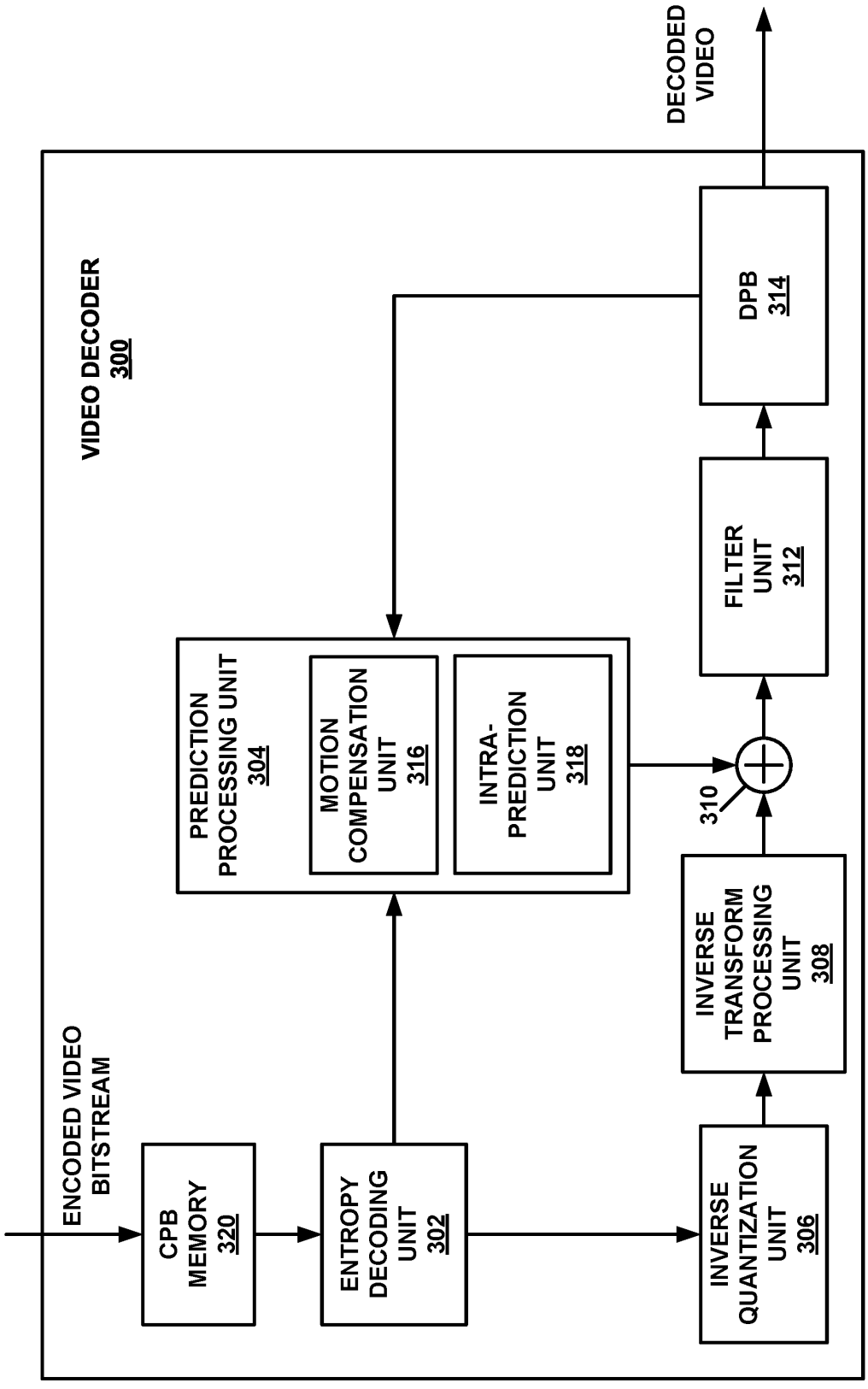
DECODED VIDEO
VIDEO DECODER 300
DPB 314
FILTER UNIT 312
PREDICTION PROCESSING UNIT 304
MOTION COMPENSATION UNIT 316
INTRA-PREDICTION UNIT 318
310
INVERSE TRANSFORM PROCESSING UNIT 308
INVERSE QUANTIZATION UNIT 306
ENTROPY DECODING UNIT 302
CPB MEMORY 320
ENCODED VIDEO BITSTREAM

FIG. 6

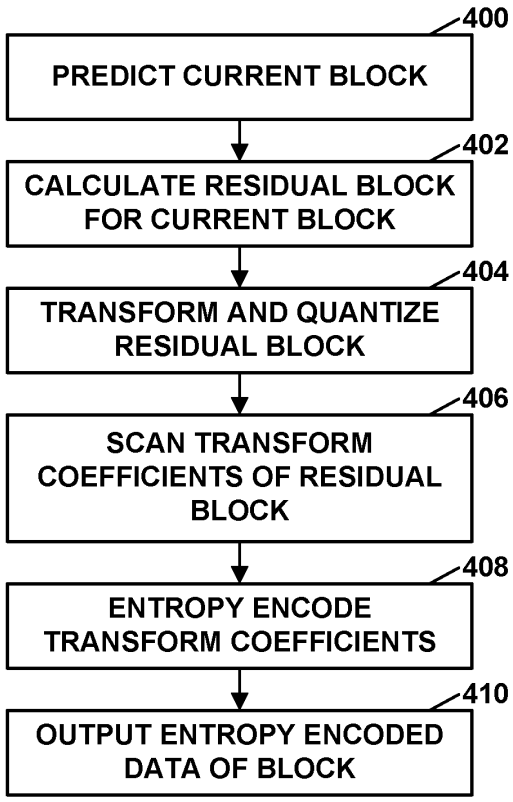
400
PREDICT CURRENT BLOCK
402
CALCULATE RESIDUAL BLOCK FOR CURRENT BLOCK
404
TRANSFORM AND QUANTIZE RESIDUAL BLOCK
406
SCAN TRANSFORM COEFFICIENTS OF RESIDUAL BLOCK
408
ENTROPY ENCODE TRANSFORM COEFFICIENTS
410
OUTPUT ENTROPY ENCODED DATA OF BLOCK

FIG. 7

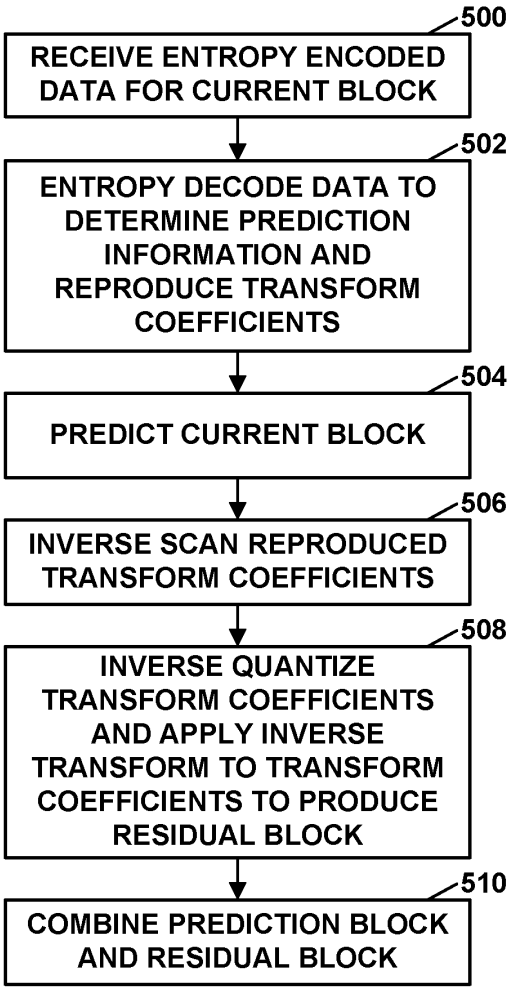
500
RECEIVE ENTROPY ENCODED DATA FOR CURRENT BLOCK
502
ENTROPY DECODE DATA TO DETERMINE PREDICTION INFORMATION AND REPRODUCE TRANSFORM COEFFICIENTS
504
PREDICT CURRENT BLOCK
506
INVERSE SCAN REPRODUCED TRANSFORM COEFFICIENTS
508
INVERSE QUANTIZE TRANSFORM COEFFICIENTS AND APPLY INVERSE TRANSFORM TO TRANSFORM COEFFICIENTS TO PRODUCE RESIDUAL BLOCK
510
COMBINE PREDICTION BLOCK AND RESIDUAL BLOCK

FIG. 8

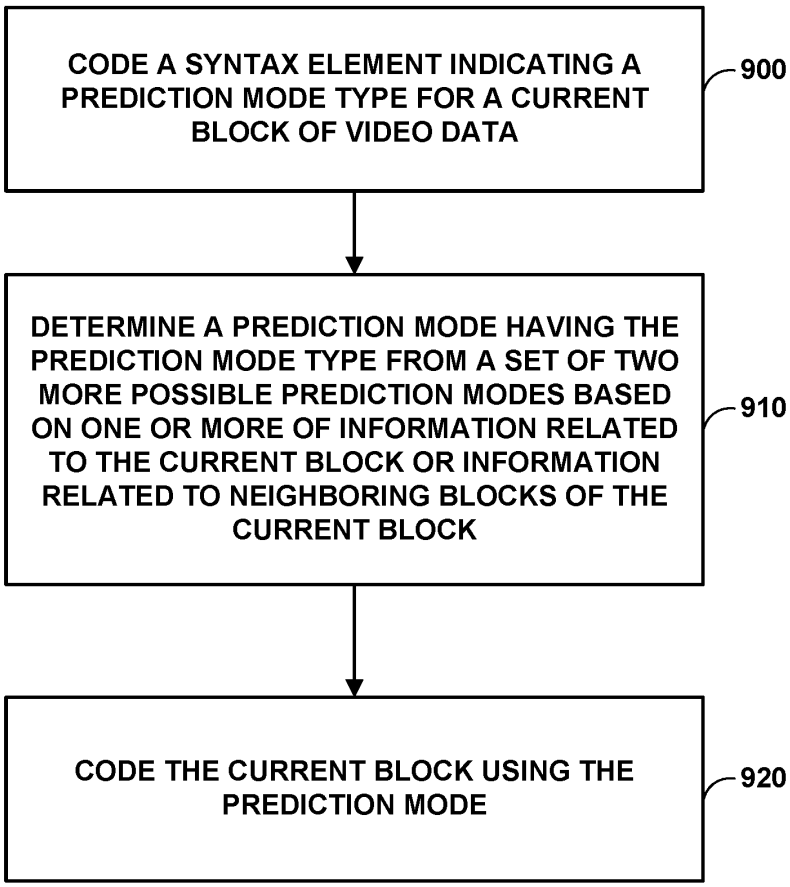
CODE A SYNTAX ELEMENT INDICATING A PREDICTION MODE TYPE FOR A CURRENT BLOCK OF VIDEO DATA
900
DETERMINE A PREDICTION MODE HAVING THE PREDICTION MODE TYPE FROM A SET OF TWO MORE POSSIBLE PREDICTION MODES BASED ON ONE OR MORE OF INFORMATION RELATED TO THE CURRENT BLOCK OR INFORMATION RELATED TO NEIGHBORING BLOCKS OF THE CURRENT BLOCK
910
CODE THE CURRENT BLOCK USING THE PREDICTION MODE
920

FIG. 9